SM_LC(GA)_R32_3D INV_EU_NB_2105

LIGHT COMMERCIAL INVERTER SERIES

SERVICE MANUAL

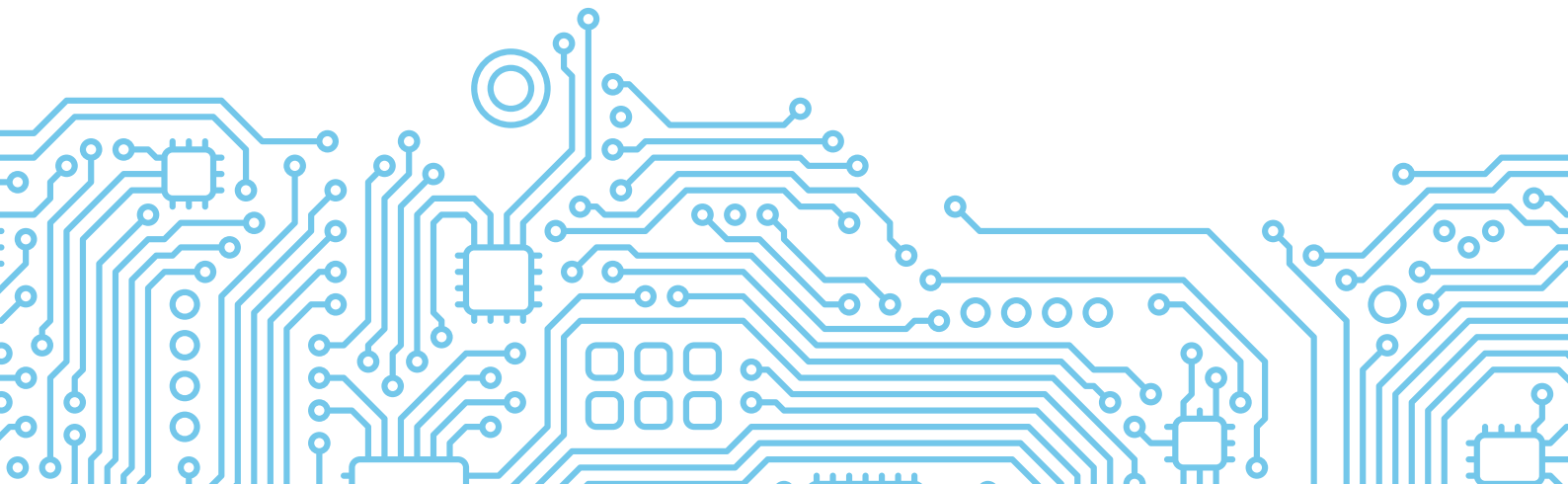

Table of Contents

§. Safety Precautions

1. Precautions
2. Information servicing

§. Model Reference & External Appearance

1. Model Reference
2. External Appearance

§. Indoor Unit

1. Indoor Unit - Console Type
2. Indoor Unit - Compact Four-way Cassette Type
3. Indoor Unit - Super Slim Four-way Cassette Type
4. Indoor Unit - A6 Duct Type
5. Indoor Unit - Floor Ceiling Type

§. Outdoor Unit

1. Dimensional Drawings
2. Service Space
3. Capacity Correction Factor for Height Difference
4. Noise Criterion Curves
5. Refrigerant Cycle Diagrams
6. Electrical Wiring Diagrams

§. Installation

§. Maintenance

§. Product Features

Table of Contents

§. Troubleshooting

1. Safety Caution
2. General Troubleshooting
3. Information Inquiry
4. Outdoor Unit Point Check Function
5. Error Diagnosis and Troubleshooting Without Error Code
6. Quick Maintenance by Error Code
7. Troubleshooting by Error Code
8. Check Procedures

§. Indoor Unit Disassembly

1. Indoor Unit - Console Type
2. Indoor Unit - Compact Four-way Cassette Type
3. Indoor Unit - Super Slim Four-way Cassette Type
4. Indoor Unit - A6 Duct Type
5. Indoor Unit - Floor Ceiling Type

§. Outdoor Unit Disassembly

Appendix

i) Temperature Sensor Resistance Value Table for T1,T2,T3 and T4 (°C – K)

ii) Temperature Sensor Resistance Value Table for TP(for some units) (°C – K)

iii) Pressure On Service Port



Caution: Risk of fire (Required for R32/R290 units only)

Safety Precautions

Contents

1. Precautions.....2
2. Information servicing(For flammable materials).....3

1. Precautions

To prevent personal injury, or property or unit damage, adhere to all precautionary measures and instructions outlined in this manual. Before servicing a unit, refer to this service manual and its relevant sections.

Failure to adhere to all precautionary measures listed in this section may result in personal injury, damage to the unit or to property, or in extreme cases, death.

WARNING indicates a potentially hazardous situation which if not avoided could result in serious personal injury, or death.

CAUTION indicates a potentially hazardous situation which if not avoided could result in minor or moderate personal injury, or unit damage.

1.1 In case of Accidents or Emergency

WARNING

- If a gas leak is suspected, immediately turn off the gas and ventilate the area if a gas leak is suspected before turning the unit on.
- If strange sounds or smoke is detected from the unit, turn the breaker off and disconnect the power supply cable.
- If the unit comes into contact with liquid, contact an authorized service center.
- If liquid from the batteries makes contact with skin or clothing, immediately rinse or wash the area well with clean water.
- Do not insert hands or other objects into the air inlet or outlet while the unit is plugged in.
- Do not operate the unit with wet hands.
- Do not use a remote controller that has previously been exposed to battery damage or battery leakage.

CAUTION

- Clean and ventilate the unit at regular intervals when operating it near a stove or near similar devices.
- Do not use the unit during severe weather conditions. If possible, remove the product from the window before such occurrences.

1.2 Pre-Installation and Installation

WARNING

- Use this unit only on a dedicated circuit.
- Damage to the installation area could cause the unit to fall, potentially resulting in personal injury, property damage, or product failure.
- Only qualified personnel should disassemble, install, remove, or repair the unit.
- Only a qualified electrician should perform electrical work. For more information, contact your dealer, seller, or an authorized service center.

CAUTION

- While unpacking be careful of sharp edges around the unit as well as the edges of the fins on the condenser and evaporator.

1.3 Operation and Maintenance

WARNING

- Do not use defective or under-rated circuit breakers.
- Ensure the unit is properly grounded and that a dedicated circuit and breaker are installed.
- Do not modify or extend the power cable. Ensure the power cable is secure and not damaged during operation.
- Do not unplug the power supply plug during operation.
- Do not store or use flammable materials near the unit.
- Do not open the inlet grill of the unit during operation.
- Do not touch the electrostatic filter if the unit is equipped with one.
- Do not block the inlet or outlet of air flow to the unit.
- Do not use harsh detergents, solvents, or similar items to clean the unit. Use a soft cloth for cleaning.
- Do not touch the metal parts of the unit when removing the air filter as they are very sharp.
- Do not step on or place anything on the unit or outdoor units.
- Do not drink water drained from the unit
- Avoid direct skin contact with water drained from the unit.
- Use a firm stool or step ladder according to manufacturer procedures when cleaning or maintaining the unit.

CAUTION

- Do not install or operate the unit for an extended period of time in areas of high humidity or in an environment directly exposing it to sea wind or salt spray.
- Do not install the unit on a defective or damaged installation stand, or in an unsecure location.
- Ensure the unit is installed at a level position
- Do not install the unit where noise or air discharge created by the outdoor unit will negatively impact the environment or nearby residences.
- Do not expose skin directly to the air discharged by the unit for prolonged periods of time.
- Ensure the unit operates in areas water or other liquids.
- Ensure the drain hose is installed correctly to ensure proper water drainage.
- When lifting or transporting the unit, it is recommended that two or more people are used for this task.
- When the unit is not to be used for an extended time, disconnect the power supply or turn off the breaker.

2. Information servicing(For flammable materials)

2.1 Checks to the area

- Prior to beginning work on systems containing flammable refrigerants, safety checks are necessary to ensure that the risk of ignition is minimized.
- For repair to the refrigerating system, the following precautions shall be complied with prior to conducting work on the system.

2.2 Work procedure

- Work shall be undertaken under a controlled procedure so as to minimise the risk of a flammable gas or vapour being present while the work is being performed.

2.3 Work procedure

- All maintenance staff and others working in the local area shall be instructed on the nature of work being carried out.
- Work in confined spaces shall be avoided.
- The area around the work space shall be sectioned off. Ensure that the conditions within the area have been made safe by control of flammable material.

2.4 Checking for presence of refrigerant

- The area shall be checked with an appropriate refrigerant detector prior to and during work, to ensure the technician is aware of potentially flammable atmospheres.
- Ensure that the leak detection equipment being used is suitable for use with flammable refrigerants, i.e. no sparking, adequately sealed or intrinsically safe.

2.5 Presence of fire extinguisher

- If any hot work is to be conducted on the refrigeration equipment or any associated parts, appropriate fire extinguishing equipment shall be available to hand.
- Have a dry powder or CO2 fire extinguisher adjacent to the charging area.

2.6 No ignition sources

- No person carrying out work in relation to a refrigeration system which involves exposing any pipe work that contains or has contained flammable refrigerant shall use any sources of ignition in such a manner that it may lead to the risk of fire or explosion.
- All possible ignition sources, including cigarette smoking, should be kept sufficiently far away from the site of installation, repairing, removing and disposal, during which flammable refrigerant can possibly be released to the surrounding space.
- Prior to work taking place, the area around the equipment is to be surveyed to make sure that there are no flammable hazards or ignition risks.
- NO SMOKING signs shall be displayed.

2.7 Ventilated area

- Ensure that the area is in the open or that it is adequately ventilated before breaking into the system or conducting any hot work. A degree of ventilation shall continue during the period that the work is carried out. The ventilation should safely disperse any released refrigerant and preferably expel it externally into the atmosphere.

2.8 Checks to the refrigeration equipment

- Where electrical components are being changed, they shall be fit for the purpose and to the correct specification. At all times the manufacturer's maintenance and service guidelines shall be followed. If in doubt consult the manufacturer's technical department for assistance. The following checks shall be applied to installations using flammable refrigerants:
  - the charge size is in accordance with the room size within which the refrigerant containing parts are installed;
  - the ventilation machinery and outlets are operating adequately and are not obstructed;
  - if an indirect refrigerating circuit is being used, the secondary circuit shall be checked for the presence of refrigerant; marking to the equipment continues to be visible and legible.
  - markings and signs that are illegible shall be corrected;
  - refrigeration pipe or components are installed in a position where they are unlikely to be exposed to any substance which may corrode refrigerant containing components, unless the components are constructed of materials which are inherently resistant to being corroded or are suitably protected against being so corroded.

2.9 Checks to electrical devices

- Repair and maintenance to electrical components shall include initial safety checks and component inspection procedures. If a fault exists that could compromise safety, then no electrical supply shall be connected to the circuit until it is satisfactorily dealt with. If the fault cannot be corrected immediately but it is necessary to continue operation, an adequate temporary solution shall be used. This shall be reported to the owner of the equipment so all parties are advised. Initial safety checks shall include:

- that capacitors are discharged: this shall be done in a safe manner to avoid possibility of sparking;
- that there no live electrical components and wiring are exposed while charging, recovering or purging the system;
- that there is continuity of earth bonding.

2.10 Repairs to sealed components

- During repairs to sealed components, all electrical supplies shall be disconnected from the equipment being worked upon prior to any removal of sealed covers, etc. If it is absolutely necessary to have an electrical supply to equipment during servicing, then a permanently operating form of leak detection shall be located at the most critical point to warn of a potentially hazardous situation.
- Particular attention shall be paid to the following to ensure that by working on electrical components, the casing is not altered in such a way that the level of protection is affected. This shall include damage to cables, excessive number of connections, terminals not made to original specification, damage to seals, incorrect fitting of glands, etc.
  - Ensure that apparatus is mounted securely.
  - Ensure that seals or sealing materials have not degraded such that they no longer serve the purpose of preventing the ingress of flammable atmospheres. Replacement parts shall be in accordance with the manufacturer's specifications.

NOTE: The use of silicon sealant may inhibit the effectiveness of some types of leak detection equipment. Intrinsically safe components do not have to be isolated prior to working on them.

2.11 Repair to intrinsically safe components

- Do not apply any permanent inductive or capacitance loads to the circuit without ensuring that this will not exceed the permissible voltage and current permitted for the equipment in use. Intrinsically safe components are the only types that can be worked on while live in the presence of a flammable atmosphere. The test apparatus shall be at the correct rating.
- Replace components only with parts specified by the manufacturer. Other parts may result in the ignition of refrigerant in the atmosphere from a leak.

2.12 Cabling

- Check that cabling will not be subject to wear, corrosion, excessive pressure, vibration, sharp edges or any other adverse environmental effects. The check shall also take into account the effects of aging or continual vibration from sources such as compressors or fans.

2.13 Detection of flammable refrigerants

- Under no circumstances shall potential sources of ignition be used in the searching for or detection of refrigerant leaks. A halide torch (or any other detector using a naked flame) shall not be used.

2.14 Leak detection methods

- The following leak detection methods are deemed acceptable for systems containing flammable refrigerants. Electronic leak detectors shall be used to detect flammable refrigerants, but the sensitivity may not be adequate, or may need re-calibration. (Detection equipment shall be calibrated in a refrigerant-free area.) Ensure that the detector is not a potential source of ignition and is suitable for the refrigerant used. Leak detection equipment shall be set at a percentage of the LFL of the refrigerant and shall be calibrated to the refrigerant employed and the appropriate percentage of gas (25 % maximum) is confirmed. Leak detection fluids are suitable for use with most refrigerants but the use of detergents containing chlorine shall be avoided as the chlorine may react with the refrigerant and corrode the copper pipe-work.
  - If a leak is suspected, all naked flames shall be removed or extinguished.
  - If a leakage of refrigerant is found which requires brazing, all of the refrigerant shall be recovered from the system, or isolated (by means of shut off valves) in a part of the systemremote from the leak. Oxygen free nitrogen (OFN) shall then be purged through the system both before and during the brazing process.

2.15 Removal and evacuation

- When breaking into the refrigerant circuit to make repairs or for any other purpose, conventional procedures shall be used. However, it is important that best practice is followed since flammability is a consideration.
- The following procedure shall be adhered to:
  - remove refrigerant;
  - purge the circuit with inert gas;
  - evacuate;
  - purge again with inert gas;
  - open the circuit by cutting or brazing.

- The refrigerant charge shall be recovered into the correct recovery cylinders. The system shall be flushed with OFN to render the unit safe. This process may need to be repeated several times. Compressed air or oxygen shall not be used for this task. Flushing shall be achieved by breaking the vacuum in the system with OFN and continuing to fill until the working pressure is achieved, then venting to atmosphere, and finally pulling down to a vacuum. This process shall be repeated until no refrigerant is within the system. When the final OFN charge is used, the system shall be vented down to atmospheric pressure to enable work to take place. This operation is absolutely vital if brazing operations on the pipe-work are to take place.
- Ensure that the outlet for the vacuum pump is not close to any ignition sources and there is ventilation available.

2.16 Charging procedures

- In addition to conventional charging procedures, the following requirements shall be followed:
  - Ensure that contamination of different refrigerants does not occur when using charging equipment. Hoses or lines shall be as short as possible to minimize the amount of refrigerant contained in them.
  - Cylinders shall be kept upright.
  - Ensure that the refrigeration system is earthed prior to charging the system with refrigerant.
  - Label the system when charging is complete (if not already).
  - Extreme care shall be taken not to overfill the refrigeration system.
  - Prior to recharging the system it shall be pressure tested with OFN. The system shall be leak tested on completion of charging but prior to commissioning. A follow up leak test shall be carried out prior to leaving the site.

2.17 Decommissioning

Before carrying out this procedure, it is essential that the technician is completely familiar with the equipment and all its detail. It is recommended good practice that all refrigerants are recovered safely. Prior to the task being carried out, an oil and refrigerant sample shall be taken.

In case analysis is required prior to re-use of reclaimed refrigerant. It is essential that electrical power is available before the task is commenced.

- Become familiar with the equipment and its operation.
- Isolate system electrically.
- Before attempting the procedure ensure that:
  - mechanical handling equipment is available, if required, for handling refrigerant cylinders;
  - all personal protective equipment is available and being used correctly;
  - the recovery process is supervised at all times by a competent person;
  - recovery equipment and cylinders conform to the appropriate standards.
- Pump down refrigerant system, if possible.
- If a vacuum is not possible, make a manifold so that refrigerant can be removed from various parts of the system.
- Make sure that cylinder is situated on the scales before recovery takes place.
- Start the recovery machine and operate in accordance with manufacturer's instructions.
- Do not overfill cylinders. (No more than 80 % volume liquid charge).
- Do not exceed the maximum working pressure of the cylinder, even temporarily.
- When the cylinders have been filled correctly and the process completed, make sure that the cylinders and the equipment are removed from site promptly and all isolation valves on the equipment are closed off.
- Recovered refrigerant shall not be charged into another refrigeration system unless it has been cleaned and checked.

2.18 Labelling

- Equipment shall be labelled stating that it has been de-commissioned and emptied of
- refrigerant. The label shall be dated and signed. Ensure that there are labels on the equipment stating the equipment contains flammable refrigerant.

2.19 Recovery

- When removing refrigerant from a system, either for servicing or decommissioning, it is recommended good practice that all refrigerants are removed safely.
- When transferring refrigerant into cylinders, ensure that only appropriate refrigerant recovery cylinders are employed. Ensure that the correct numbers of cylinders for holding the total system charge are available. All cylinders to be used are designated for the recovered refrigerant and labelled for that refrigerant (i.e. special cylinders for the recovery of refrigerant). Cylinders shall be complete with pressure relief valve and associated shut-off valves in good working order.

- Empty recovery cylinders are evacuated and, if possible, cooled before recovery occurs.
- The recovery equipment shall be in good working order with a set of instructions concerning the equipment that is at hand and shall be suitable for the recovery of flammable refrigerants. In addition, a set of calibrated weighing scales shall be available and in good working order.
- Hoses shall be complete with leak-free disconnect couplings and in good condition. Before using the recovery machine, check that it is in satisfactory working order, has been properly maintained and that any associated electrical components are sealed to prevent ignition in the event of a refrigerant release. Consult manufacturer if in doubt.
- The recovered refrigerant shall be returned to the refrigerant supplier in the correct recovery cylinder, and the relevant Waste Transfer Note arranged. Do not mix refrigerants in recovery units and especially not in cylinders.
- If compressors or compressor oils are to be removed, ensure that they have been evacuated to an acceptable level to make certain that flammable refrigerant does not remain within the lubricant. The evacuation process shall be carried out prior to returning the compressor to the suppliers. Only electric heating to the compressor body shall be employed to accelerate this process. When oil is drained from a system, it shall be carried out safely.

Model Reference

Contents

1. Model Reference.....2
2 External Appearance.....3

1. Model Reference

Refer to the following table to determine the specific indoor and outdoor unit model number of your purchased equipment.

Note: There are two versions of the 36k. Check you are using the right power supply for your model. Power Supply Intake : Outdoor Units

Indoor Unit Model		Universal Outdoor Unit Model	Capacity (Btu/h)	Power Supply
Cassette	MCA3U-12HRFNX-QRD0W(GA)	MOX230-12HFN8-QRD0W(GA)	12k	1Φ, 220-240V~, 50Hz
A6 Duct	MTIU-12HWFNX-QRD0W(GA)			
Console	MFAU-12HRFNX-QRD0W(GA)			
Cassette	MCA3U-18HRFNX-QRD0W(GA)	MOX330U-18HFN8-QRD0W(GA)	18k	1Φ, 220-240V~, 50Hz
A6 Duct	MTIU-18HWFNX-QRD0W(GA)			
Floor Ceiling	MUEU-18HRFNX-QRD0W(GA)			
Console	MFAU-16HRFN8-QRD0W(GA)			
Cassette	MCD1-24HRFNX-QRD0W(GA)	MOX430U-24HFN8-QRD0W(GA)	24k	1Φ, 220-240V~, 50Hz
A6 Duct	MTI-24HWFNX-QRD0W(GA)			
Floor Ceiling	MUE-24HRFNX-QRD0W(GA)			
Cassette	MCD1-30HRFNX-QRD0W(GA)	MOD30U-30HFN8-QRD0W(GA)	30k	1Φ, 220-240V~, 50Hz
A6 Duct	MTI-30HWFNX-QRD0W(GA)			
Cassette	MCD1-36HRFN8-QRD0W(GA)	MOD30U-36HFN8-QRD0W(GA)	36k	1Φ, 220-240V~, 50Hz
A6 Duct	MTI-36HWFNX-QRD0W(GA)			
Floor Ceiling	MUE-36HRFNX-QRD0W(GA)			
Cassette	MCD1-36HRFN8-QRD0W(GA)	MOD30U-36HFN8-RRD0W(GA)	36k	3Φ, 380-415V~, 50Hz
A6 Duct	MTI-36HWFNX-QRD0W(GA)			
Floor Ceiling	MUE-36HRFNX-QRD0W(GA)			
Cassette	MCD1-42HRFNX-QRD0W(GA)	MOD30U-42HFN8-QRD0W(GA)	42k	1Φ, 220-240V~, 50Hz
A6 Duct	MTI-42HWFNX-QRD0W(GA)			
Cassette	MCD1-48HRFNX-QRD0W(GA)	MOE30U-48HFN8-RRD0W(GA)	48k	3Φ, 380-415V~, 50Hz
A6 Duct	MTI-48HWFNX-QRD0W(GA)			
Floor Ceiling	MUE-48HRFNX-QRD0W(GA)			
Cassette	MCD1-55HRFNX-QRD0W(GA)	MOE30U-55HFN8-RRD0W(GA)	55k	3Φ, 380-415V~, 50Hz
A6 Duct	MTI-55HWFNX-QRD0W(GA)			
Floor Ceiling	MUE-55HRFNX-QRD0W(GA)			

2. External Appearance

2.1 Indoor Unit

Compact Four-way Cassette	Super Slim Four-way Cassette
	
Ceiling &floor(Floor installation)	**Ceiling &floor(Ceiling installation)**
	
A6 Duct	**Console**
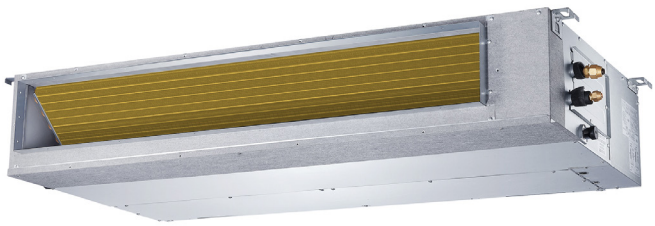	

2.2 Outdoor Unit

Single Fan Outdoor Unit	Double Fan Outdoor Unit
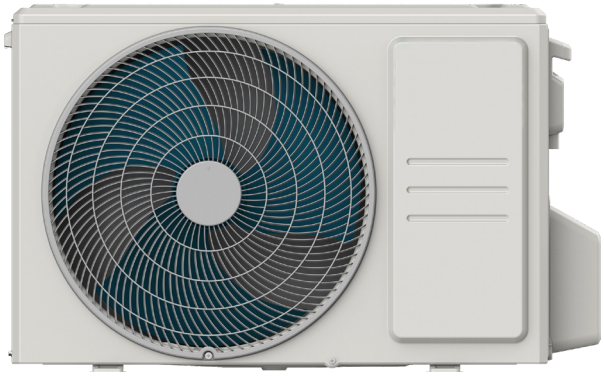	

Indoor Unit-Console

Contents

1. Feature....2
2. Dimensional Drawings....3
3. Part names....4
4. Service Place....4
5. Accessories....5
6 Air Velocity and Temperature Distributions....6
7. Capacity Tables....7
8. Noise Criterion Curves....13
9. Electrical Characteristics....14
10. Electrical Wiring Diagrams....14

1. Feature

1.1 Stylish Design

- The modern and elegant appearance is harmonious with your living space.

1.2 Two air outlets, four air inlets

- 2 Direction of air flow can be in two patterns: Both up and down or up only.



- Air inlet from 4 directions.



1.3 Quiet Design

- Advanced unique large centrifugal fan blade eliminates unnecessary noise and allows for smooth operation.



2. Dimensional Drawings

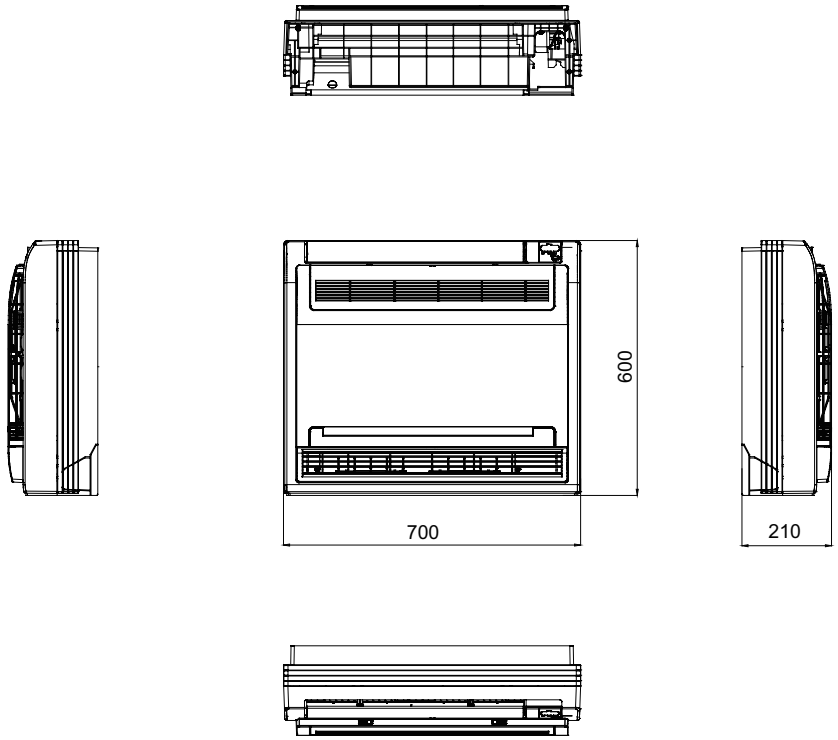

3. Part names

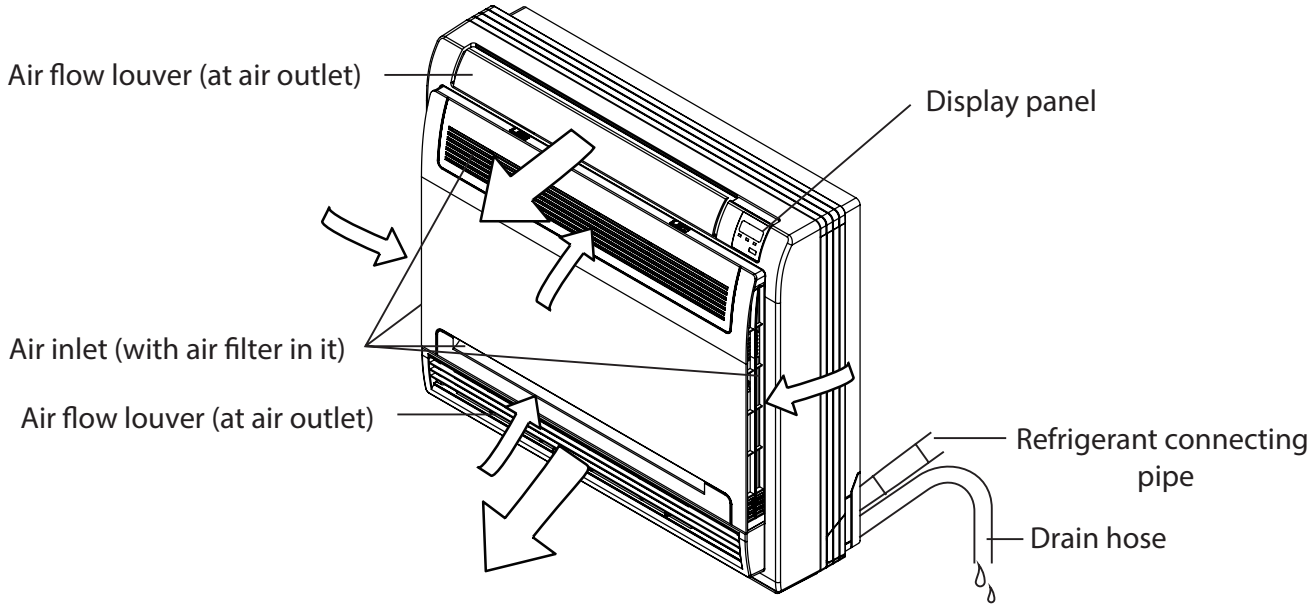

4. Service Place

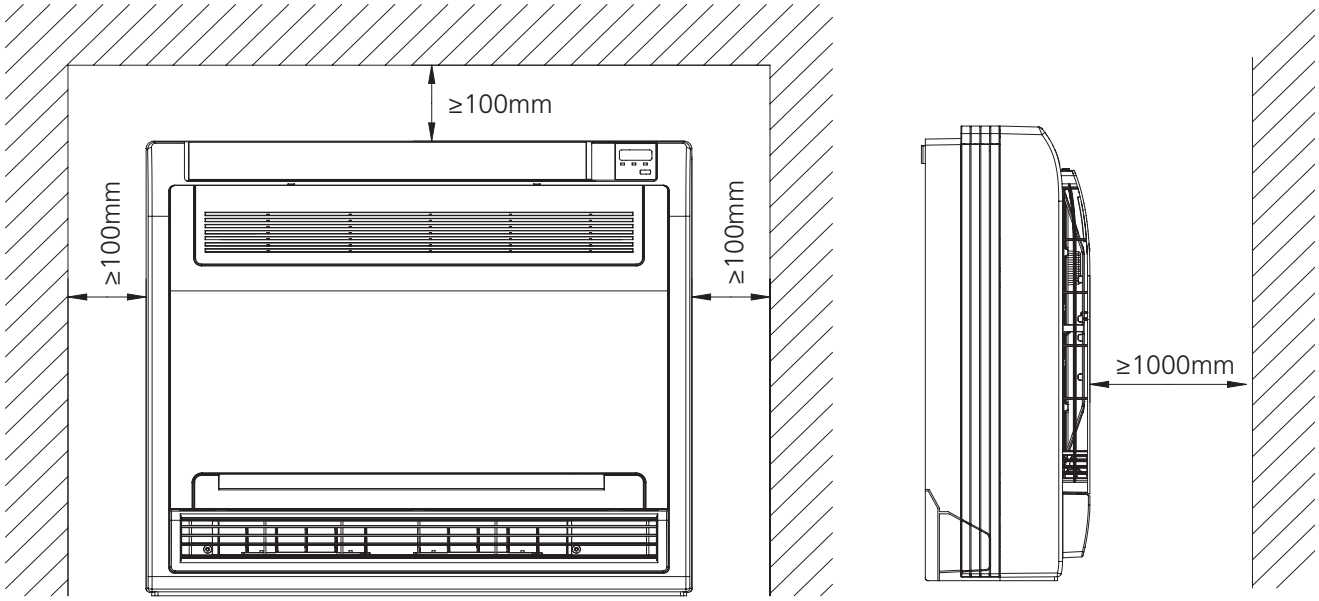

5. Accessories

The air conditioning system comes with the following accessories. Use all of the installation parts and accessories to install the air conditioner. Improper installation may result in water leakage, electrical shock and fire, or equipment failure.

	Name	Shape	Quantity
Refrigeration Fittings	Soundproof/insulation sheath (some models)	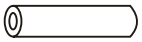	2
Installation Fittings	Hook		2
Drainpipe Fittings (for cooling & heating)	Drain joint (some models)	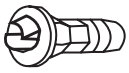	1
	Seal ring (some models)	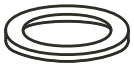	1
EMC Magnetic Ring (some models)	Magnetic ring (wrap the electric wires S1 & S2 (P & Q & E) around the magnetic ring twice)	 S1&S2(P&Q&E)	1
	Magnetic ring (Hitch on the connective cable between the indoor unit and outdoor unit after installation.)		1
Others	Owner's manual&Installation manual	-	1
	Transfer connector(Φ12.7-Φ15.9)/(Φ0.5in-Φ0.63in) (Packed with the indoor unit) NOTE: Pipe size may differ from appliance to appliance. To meet different pipe size requirements, sometimes the pipe connections need a transfer connector installed on the outdoor unit .	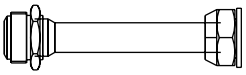	1 (on some models)
	Transfer connector(Φ6.35-Φ9.52)/(Φ0.25in-Φ0.37in) (Packed with the indoor unit) NOTE: Pipe size may differ from appliance to appliance. To meet different pipe size requirements, sometimes the pipe connections need a transfer connector installed on the outdoor unit .	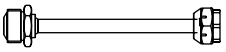	1 (on some models)
	Transfer connector(Φ9.52-Φ12.7)/(Φ0.375in-Φ0.5in) (Packed with the indoor unit) NOTE: Pipe size may differ from appliance to appliance. To meet different pipe size requirements, sometimes the pipe connections need a transfer connector installed on the outdoor unit .	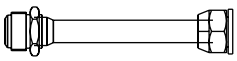	1 (on some models)
	Red short connected wire (Applied to the W/L pin of outdoor unit terminal block be short-circuited.)	-	1 (on some models)

Optional accessories:

- There are two types of remote controls: wired and wireless.
- Select a remote controller based on customer preferences and requirements and install in an appropriate place.
- Refer to catalogues and technical literature for guidance on selecting a suitable remote controller.

6. Air Velocity and Temperature Distributions

Discharge Angle 60°

Airflow velocity

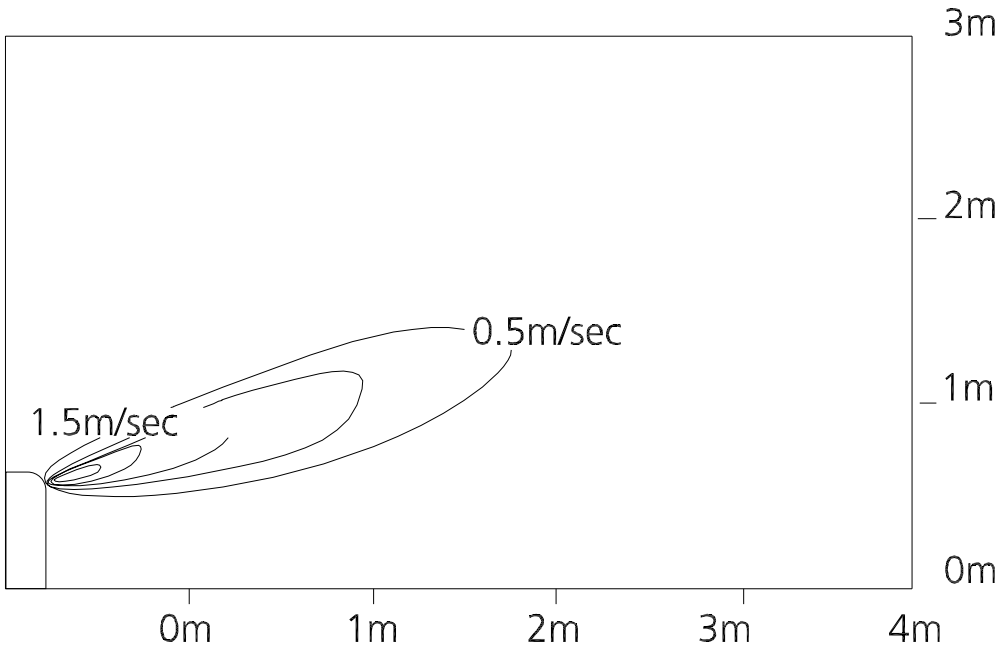

Temperature

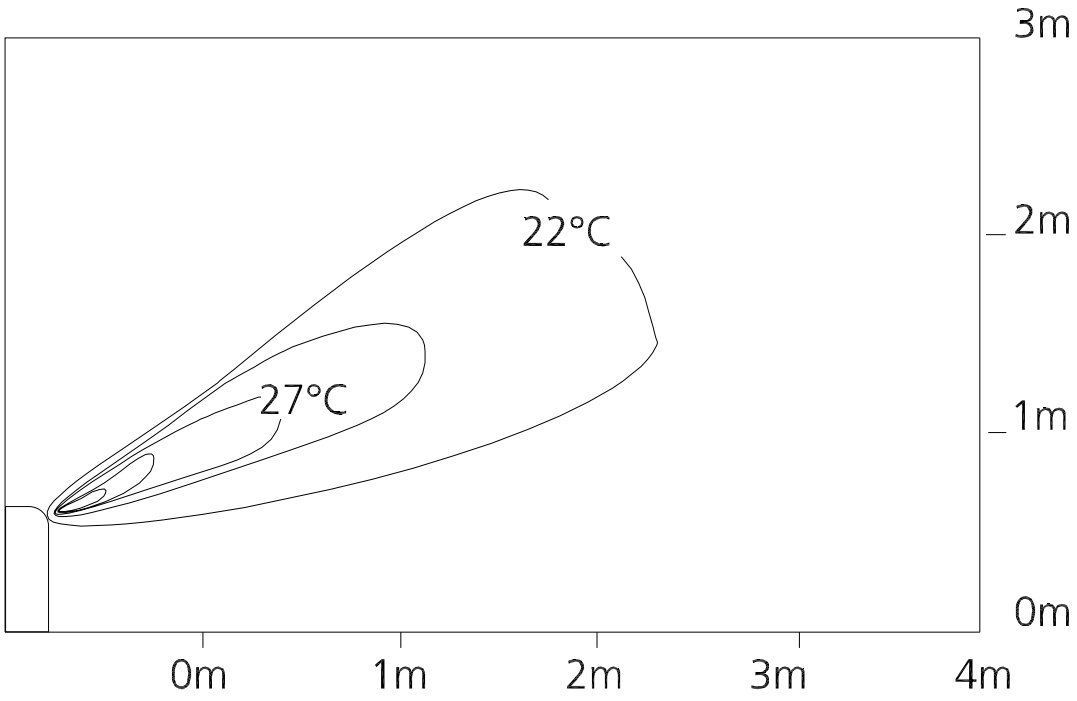

7. Capacity Tables

7.1 Cooling

12k																		
INDOOR AIRFLOW (CMH)	OUTDOOR DB(℃)	ID WB (℃)	16.0				18.0				19.0				22.0			
		ID DB (℃)	23.0	25.0	27.0	29.0	23.0	25.0	27.0	29.0	23.0	25.0	27.0	29.0	23.0	25.0	27.0	29.0
386	-15	TC	3.71	3.72	3.72	3.75	3.90	3.96	3.96	3.96	4.00	4.00	4.00	4.00	4.25	4.25	4.25	4.25
		S/T	0.68	0.74	0.81	0.88	0.55	0.62	0.69	0.75	0.49	0.56	0.63	0.69	0.37	0.42	0.48	0.54
		PI	0.68	0.68	0.68	0.68	0.68	0.68	0.68	0.68	0.68	0.68	0.68	0.68	0.67	0.67	0.67	0.67
	-10	TC	3.68	3.70	3.70	3.73	3.87	3.93	3.93	3.93	3.98	3.98	3.98	3.98	4.23	4.23	4.23	4.23
		S/T	0.68	0.75	0.82	0.88	0.55	0.62	0.69	0.76	0.49	0.56	0.63	0.69	0.37	0.43	0.49	0.54
		PI	0.68	0.67	0.67	0.68	0.68	0.68	0.68	0.68	0.68	0.68	0.68	0.68	0.67	0.67	0.67	0.67
	-5	TC	3.66	3.67	3.67	3.70	3.86	3.92	3.92	3.92	3.96	3.96	3.96	3.96	4.22	4.22	4.22	4.22
		S/T	0.68	0.75	0.82	0.89	0.56	0.62	0.69	0.76	0.50	0.57	0.63	0.69	0.37	0.43	0.49	0.55
		PI	0.68	0.67	0.67	0.68	0.68	0.68	0.68	0.68	0.68	0.68	0.68	0.68	0.67	0.67	0.67	0.67
	0	TC	3.64	3.66	3.66	3.68	3.85	3.91	3.91	3.91	3.95	3.95	3.95	3.95	4.22	4.22	4.22	4.22
		S/T	0.69	0.75	0.82	0.89	0.56	0.63	0.70	0.76	0.50	0.57	0.64	0.70	0.37	0.43	0.49	0.55
		PI	0.68	0.68	0.68	0.68	0.68	0.68	0.68	0.68	0.68	0.68	0.68	0.68	0.68	0.68	0.68	0.68
	5	TC	3.62	3.64	3.64	3.67	3.83	3.89	3.89	3.89	3.94	3.94	3.94	3.94	4.21	4.21	4.21	4.21
		S/T	0.69	0.76	0.83	0.90	0.56	0.63	0.70	0.77	0.50	0.57	0.64	0.70	0.37	0.43	0.49	0.55
		PI	0.68	0.68	0.68	0.68	0.68	0.68	0.68	0.68	0.69	0.69	0.69	0.69	0.68	0.68	0.68	0.68
	10	TC	3.60	3.61	3.61	3.64	3.81	3.87	3.87	3.87	3.92	3.92	3.92	3.92	4.20	4.20	4.20	4.20
		S/T	0.69	0.76	0.83	0.90	0.56	0.63	0.70	0.77	0.50	0.57	0.64	0.70	0.38	0.44	0.50	0.55
		PI	0.70	0.69	0.69	0.70	0.69	0.69	0.69	0.69	0.70	0.70	0.70	0.70	0.69	0.69	0.69	0.69
	15	TC	3.57	3.59	3.59	3.61	3.79	3.85	3.85	3.85	3.90	3.90	3.90	3.90	4.19	4.19	4.19	4.19
		S/T	0.70	0.77	0.84	0.91	0.57	0.64	0.71	0.78	0.51	0.58	0.65	0.71	0.38	0.44	0.50	0.56
		PI	0.71	0.71	0.71	0.71	0.71	0.71	0.71	0.71	0.71	0.71	0.71	0.71	0.70	0.70	0.70	0.70
	20	TC	3.53	3.54	3.54	3.57	3.75	3.75	3.75	3.75	3.86	3.86	3.86	3.86	4.15	4.15	4.15	4.15
		S/T	0.70	0.77	0.84	0.91	0.57	0.64	0.71	0.78	0.51	0.58	0.65	0.71	0.38	0.44	0.50	0.56
		PI	0.74	0.74	0.74	0.74	0.74	0.74	0.74	0.74	0.74	0.74	0.74	0.74	0.73	0.73	0.73	0.73
	25	TC	3.37	3.37	3.37	3.40	3.57	3.57	3.57	3.57	3.69	3.69	3.69	3.69	3.98	3.98	3.98	3.98
		S/T	0.70	0.78	0.86	0.93	0.57	0.65	0.72	0.79	0.51	0.58	0.65	0.72	0.37	0.44	0.50	0.57
		PI	0.81	0.81	0.81	0.81	0.81	0.81	0.81	0.81	0.81	0.81	0.81	0.81	0.81	0.81	0.81	0.81
	30	TC	3.20	3.20	3.20	3.23	3.43	3.43	3.43	3.43	3.52	3.52	3.52	3.52	3.80	3.80	3.80	3.80
		S/T	0.71	0.79	0.87	0.95	0.57	0.65	0.73	0.80	0.51	0.59	0.66	0.73	0.37	0.44	0.51	0.57
		PI	0.89	0.89	0.89	0.89	0.89	0.89	0.89	0.89	0.89	0.89	0.89	0.89	0.89	0.89	0.89	0.89
	35	TC	3.05	3.05	3.08	3.11	3.26	3.26	3.26	3.26	3.34	3.34	3.40	3.34	3.60	3.60	3.60	3.60
		S/T	0.72	0.80	0.88	0.96	0.58	0.66	0.74	0.82	0.51	0.59	0.67	0.75	0.36	0.44	0.51	0.58
		PI	0.97	0.97	0.97	0.97	0.98	0.98	0.98	0.98	0.98	0.98	0.98	0.98	0.99	0.99	0.99	0.99
	40	TC	2.89	2.89	2.92	2.95	3.09	3.09	3.09	3.09	3.18	3.18	3.21	3.18	3.43	3.43	3.43	3.43
		S/T	0.74	0.83	0.92	1.00	0.59	0.67	0.76	0.85	0.52	0.60	0.69	0.77	0.36	0.44	0.51	0.59
		PI	1.08	1.08	1.08	1.08	1.08	1.08	1.08	1.08	1.09	1.09	1.09	1.09	1.10	1.10	1.10	1.10
	46	TC	2.67	2.67	2.70	2.73	2.87	2.87	2.87	2.87	2.96	2.96	2.96	2.96	3.19	3.19	3.19	3.19
		S/T	0.75	0.84	0.94	1.00	0.59	0.68	0.77	0.86	0.52	0.61	0.69	0.78	0.35	0.44	0.52	0.60
		PI	1.20	1.20	1.20	1.20	1.20	1.20	1.20	1.20	1.21	1.21	1.21	1.21	1.22	1.22	1.22	1.22
	50	TC	2.53	2.53	2.55	2.58	2.70	2.70	2.70	2.73	2.79	2.79	2.79	2.79	3.02	3.02	3.02	3.02
		S/T	0.76	0.86	0.96	1.00	0.60	0.69	0.79	0.88	0.52	0.62	0.71	0.80	0.35	0.44	0.52	0.61
		PI	1.30	1.30	1.30	1.30	1.31	1.31	1.31	1.31	1.31	1.31	1.31	1.31	1.32	1.32	1.32	1.32

466	-15	TC	3.78	3.78	3.81	3.84	3.96	3.96	3.96	3.96	4.06	4.06	4.06	4.06	4.31	4.31	4.31	4.31
		S/T	0.70	0.78	0.98	1.00	0.56	0.64	0.72	0.80	0.49	0.57	0.65	0.72	0.35	0.42	0.49	0.56
		PI	0.70	0.70	0.70	0.70	0.69	0.69	0.69	0.69	0.69	0.69	0.69	0.69	0.69	0.69	0.69	0.69
	-10	TC	3.76	3.76	3.79	3.82	3.93	3.93	3.93	3.93	4.04	4.04	4.04	4.04	4.29	4.29	4.29	4.29
		S/T	0.70	0.79	0.99	1.00	0.56	0.64	0.73	0.81	0.49	0.57	0.65	0.73	0.35	0.43	0.49	0.56
		PI	0.69	0.69	0.69	0.69	0.69	0.69	0.69	0.69	0.69	0.69	0.69	0.69	0.69	0.69	0.69	0.69
	-5	TC	3.73	3.73	3.76	3.79	3.92	3.92	3.92	3.92	4.02	4.02	4.02	4.02	4.28	4.28	4.28	4.28
		S/T	0.70	0.79	0.99	1.00	0.57	0.64	0.73	0.81	0.50	0.58	0.65	0.73	0.35	0.43	0.50	0.57
		PI	0.69	0.69	0.69	0.69	0.69	0.69	0.69	0.69	0.69	0.69	0.69	0.69	0.69	0.69	0.69	0.69
	0	TC	3.72	3.72	3.75	3.77	3.91	3.91	3.91	3.91	4.01	4.01	4.01	4.01	4.28	4.28	4.28	4.28
		S/T	0.71	0.79	1.00	1.00	0.57	0.65	0.74	0.81	0.50	0.58	0.66	0.74	0.35	0.43	0.50	0.57
		PI	0.69	0.69	0.69	0.69	0.69	0.69	0.69	0.69	0.69	0.69	0.69	0.69	0.69	0.69	0.69	0.69
	5	TC	3.70	3.70	3.73	3.76	3.89	3.89	3.89	3.89	4.00	4.00	4.00	4.00	4.27	4.27	4.27	4.27
		S/T	0.71	0.80	1.00	1.00	0.57	0.65	0.74	0.82	0.50	0.58	0.66	0.74	0.35	0.43	0.50	0.57
		PI	0.70	0.70	0.70	0.70	0.69	0.69	0.69	0.69	0.70	0.70	0.70	0.70	0.70	0.70	0.70	0.70
	10	TC	3.67	3.67	3.70	3.73	3.87	3.87	3.87	3.87	3.98	3.98	3.98	3.98	4.26	4.26	4.26	4.26
		S/T	0.71	0.80	1.00	1.00	0.57	0.65	0.74	0.82	0.50	0.58	0.66	0.74	0.36	0.44	0.50	0.57
		PI	0.71	0.71	0.71	0.71	0.70	0.70	0.70	0.70	0.71	0.71	0.71	0.71	0.71	0.71	0.71	0.71
	15	TC	3.64	3.64	3.67	3.70	3.85	3.85	3.85	3.85	3.96	3.96	3.96	3.96	4.25	4.25	4.25	4.25
		S/T	0.72	0.81	0.89	0.98	0.58	0.66	0.75	0.83	0.51	0.59	0.67	0.75	0.36	0.44	0.51	0.58
		PI	0.73	0.73	0.73	0.73	0.72	0.72	0.72	0.72	0.72	0.72	0.72	0.72	0.72	0.72	0.72	0.72
	20	TC	3.60	3.60	3.63	3.66	3.81	3.81	3.81	3.81	3.92	3.92	3.92	3.92	4.21	4.21	4.21	4.21
		S/T	0.72	0.81	0.89	0.98	0.58	0.66	0.75	0.83	0.51	0.59	0.67	0.75	0.36	0.44	0.51	0.58
		PI	0.76	0.76	0.76	0.76	0.75	0.75	0.75	0.75	0.75	0.75	0.75	0.75	0.75	0.75	0.75	0.75
	25	TC	3.43	3.43	3.46	3.49	3.63	3.63	3.63	3.63	3.75	3.75	3.75	3.75	4.04	4.04	4.04	4.04
		S/T	0.73	0.82	0.91	1.00	0.58	0.67	0.76	0.84	0.52	0.60	0.68	0.77	0.36	0.44	0.51	0.59
		PI	0.83	0.83	0.83	0.83	0.83	0.83	0.83	0.83	0.83	0.83	0.83	0.83	0.83	0.83	0.83	0.83
	30	TC	3.26	3.26	3.29	3.32	3.49	3.49	3.49	3.49	3.57	3.57	3.57	3.57	3.86	3.86	3.86	3.86
		S/T	0.74	0.84	0.93	1.00	0.59	0.68	0.77	0.86	0.52	0.61	0.69	0.78	0.36	0.44	0.52	0.60
		PI	0.91	0.91	0.91	0.91	0.91	0.91	0.91	0.91	0.91	0.91	0.91	0.91	0.91	0.91	0.91	0.91
	35	TC	3.11	3.11	3.14	3.17	3.32	3.32	3.32	3.32	3.40	3.40	3.46	3.40	3.66	3.66	3.66	3.66
		S/T	0.75	0.85	0.95	1.00	0.59	0.69	0.78	0.88	0.52	0.61	0.70	0.80	0.35	0.44	0.52	0.61
		PI	0.99	0.99	0.99	0.99	1.00	1.00	1.00	1.00	1.00	1.00	1.00	1.00	1.00	1.00	1.00	1.00
	40	TC	2.89	2.91	2.94	2.96	3.08	3.08	3.08	3.09	3.17	3.17	3.20	3.17	3.42	3.42	3.42	3.42
		S/T	0.78	0.88	0.99	1.00	0.61	0.71	0.82	0.92	0.53	0.63	0.73	0.83	0.35	0.44	0.53	0.62
		PI	1.09	1.09	1.09	1.09	1.10	1.10	1.10	1.10	1.10	1.10	1.10	1.10	1.10	1.10	1.10	1.10
	46	TC	2.68	2.71	2.73	2.76	2.85	2.85	2.85	2.88	2.93	2.93	2.93	2.93	3.19	3.19	3.19	3.19
		S/T	0.79	0.90	1.00	1.00	0.61	0.72	0.83	0.93	0.53	0.64	0.74	0.85	0.34	0.44	0.54	0.63
		PI	1.21	1.21	1.21	1.21	1.22	1.22	1.22	1.22	1.22	1.22	1.22	1.22	1.23	1.23	1.23	1.23
	50	TC	2.51	2.53	2.56	2.59	2.68	2.68	2.68	2.71	2.76	2.76	2.76	2.76	3.02	3.02	3.02	3.02
		S/T	0.81	0.93	1.00	1.00	0.62	0.74	0.85	0.96	0.54	0.65	0.76	0.87	0.34	0.44	0.54	0.91
		PI	1.32	1.32	1.32	1.32	1.32	1.32	1.32	1.32	1.33	1.33	1.33	1.33	1.34	1.34	1.34	1.34
550	-15	TC	3.84	3.84	3.87	3.90	4.02	4.02	4.02	4.02	4.12	4.12	4.12	4.12	4.40	4.40	4.40	4.40
		S/T	0.72	0.82	1.00	1.00	0.58	0.67	0.76	0.98	0.50	0.59	0.69	0.77	0.34	0.42	0.50	0.59
		PI	0.71	0.71	0.71	0.71	0.71	0.71	0.71	0.71	0.71	0.71	0.71	0.71	0.70	0.70	0.70	0.70
	-10	TC	3.82	3.82	3.85	3.88	3.99	3.99	3.99	3.99	4.10	4.10	4.10	4.10	4.38	4.38	4.38	4.38
		S/T	0.73	0.82	1.00	1.00	0.58	0.67	0.77	0.98	0.50	0.59	0.69	0.78	0.34	0.43	0.50	0.59
		PI	0.70	0.70	0.70	0.70	0.70	0.70	0.70	0.70	0.71	0.71	0.71	0.71	0.70	0.70	0.70	0.70
	-5	TC	3.79	3.79	3.82	3.85	3.98	3.98	3.98	3.98	4.08	4.08	4.08	4.08	4.37	4.37	4.37	4.37
		S/T	0.73	0.83	1.00	1.00	0.59	0.67	0.77	0.99	0.51	0.59	0.69	0.78	0.34	0.43	0.51	0.59
		PI	0.70	0.70	0.70	0.70	0.70	0.70	0.70	0.70	0.71	0.71	0.71	0.71	0.70	0.70	0.70	0.70
	0	TC	3.77	3.77	3.80	3.83	3.96	3.96	3.96	3.96	4.07	4.07	4.07	4.07	4.37	4.37	4.37	4.37
		S/T	0.74	0.83	1.00	1.00	0.59	0.68	0.77	0.99	0.51	0.60	0.70	0.78	0.34	0.43	0.51	0.60
		PI	0.70	0.70	0.70	0.70	0.71	0.71	0.71	0.71	0.71	0.71	0.71	0.71	0.70	0.70	0.70	0.70
	5	TC	3.76	3.76	3.79	3.82	3.95	3.95	3.95	3.95	4.06	4.06	4.06	4.06	4.36	4.36	4.36	4.36
		S/T	0.74	0.84	1.00	1.00	0.59	0.68	0.78	1.00	0.51	0.60	0.70	0.79	0.34	0.43	0.51	0.60
		PI	0.71	0.71	0.71	0.71	0.71	0.71	0.71	0.71	0.71	0.71	0.71	0.71	0.71	0.71	0.71	0.71
	10	TC	3.73	3.73	3.76	3.79	3.93	3.93	3.93	3.93	4.04	4.04	4.04	4.04	4.35	4.35	4.35	4.35
		S/T	0.74	0.84	1.00	1.00	0.59	0.68	0.78	1.00	0.51	0.60	0.70	0.79	0.35	0.44	0.51	0.60
		PI	0.72	0.72	0.72	0.72	0.72	0.72	0.72	0.72	0.72	0.72	0.72	0.72	0.72	0.72	0.72	0.72
	15	TC	3.70	3.70	3.73	3.76	3.90	3.90	3.90	3.90	4.02	4.02	4.02	4.02	4.33	4.33	4.33	4.33
		S/T	0.75	0.85	0.95	1.00	0.60	0.69	0.79	0.88	0.52	0.61	0.71	0.80	0.35	0.44	0.52	0.61
		PI	0.74	0.74	0.74	0.74	0.74	0.74	0.74	0.74	0.74	0.74	0.74	0.74	0.73	0.73	0.73	0.73
	20	TC	3.66	3.66	3.69	3.72	3.86	3.86	3.86	3.86	3.98	3.98	3.98	3.98	4.30	4.30	4.30	4.30
		S/T	0.75	0.85	0.95	1.00	0.60	0.69	0.79	0.88	0.52	0.61	0.71	0.80	0.35	0.44	0.52	0.61
		PI	0.77	0.77	0.77	0.77	0.77	0.77	0.77	0.77	0.77	0.77	0.77	0.77	0.76	0.76	0.76	0.76
	25	TC	3.49	3.49	3.52	3.55	3.69	3.69	3.69	3.72	3.81	3.81	3.81	3.81	4.09	4.09	4.09	4.09
		S/T	0.76	0.87	0.97	1.00	0.60	0.70	0.80	0.90	0.52	0.62	0.72	0.82	0.35	0.44	0.53	0.62
		PI	0.84	0.84	0.84	0.84	0.84	0.84	0.84	0.84	0.84	0.84	0.84	0.84	0.84	0.84	0.84	0.84
	30	TC	3.32	3.34	3.37	3.40	3.55	3.55	3.55	3.57	3.63	3.63	3.63	3.63	3.92	3.92	3.92	3.92
		S/T	0.78	0.89	0.99	1.00	0.61	0.71	0.81	0.92	0.53	0.63	0.73	0.83	0.34	0.44	0.53	0.63
		PI	0.92	0.92	0.92	0.92	0.93	0.93	0.93	0.93	0.93	0.93	0.93	0.93	0.93	0.93	0.93	0.93
	35	TC	3.14	3.17	3.20	3.23	3.37	3.37	3.37	3.40	3.46	3.46	**3.52**	3.46	3.75	3.75	3.75	3.75
		S/T	0.79	0.91	1.00	1.00	0.61	0.72	0.83	0.94	0.53	0.64	**0.74**	0.85	0.34	0.44	0.54	0.64
		PI	1.01	1.01	1.01	1.01	1.02	1.02	1.02	1.02	1.02	1.02	**1.02**	1.02	1.03	1.03	1.03	1.03
	40	TC	2.92	2.95	2.98	3.01	3.14	3.14	3.15	3.18	3.22	3.22	3.25	3.24	3.50	3.50	3.50	3.50
		S/T	0.82	0.94	1.00	1.00	0.63	0.75	0.87	0.99	0.54	0.66	0.77	0.89	0.34	0.44	0.55	0.90
		PI	1.11	1.11	1.11	1.11	1.12	1.12	1.12	1.12	1.12	1.12	1.12	1.12	1.13	1.13	1.13	1.13
	46	TC	2.71	2.73	2.76	2.79	2.90	2.90	2.93	2.96	2.99	2.99	2.99	3.02	3.25	3.25	3.25	3.25
		S/T	0.84	0.97	1.00	1.00	0.64	0.76	0.88	1.00	0.54	0.67	0.79	0.91	0.33	0.45	0.56	0.92
		PI	1.24	1.24	1.24	1.24	1.24	1.24	1.24	1.24	1.25	1.25	1.25	1.25	1.26	1.26	1.26	1.26
	50	TC	2.56	2.59	2.62	2.65	2.73	2.73	2.76	2.79	2.82	2.82	2.82	2.85	3.05	3.05	3.05	3.05
		S/T	0.86	1.00	1.00	1.00	0.65	0.78	0.91	1.00	0.55	0.68	0.81	0.94	0.33	0.45	0.57	0.97
		PI	1.34	1.34	1.34	1.34	1.35	1.35	1.35	1.35	1.35	1.35	1.35	1.35	1.36	1.36	1.36	1.36

TC:Total Cooling Capacity (kW)

S/T:Sensible Cooling Capacity Ratio

PI:Power Input(kW)

Note: The table shows the case where the operation frequency of a compressor is fixed.

16k																			
INDOOR AIRFLOW (CMH)	OUTDOOR DB(℃)	ID WB (℃)	16.0				18.0				19.0				22.0				
		ID DB (℃)	23.0	25.0	27.0	29.0	23.0	25.0	27.0	29.0	23.0	25.0	27.0	29.0	23.0	25.0	27.0	29.0	
400	-15	TC	5.08	5.07	5.07	5.07	5.34	5.45	5.45	5.45	5.48	5.48	5.48	5.48	5.80	5.80	5.80	5.80	
		S/T	0.65	0.70	0.75	0.81	0.55	0.60	0.66	0.70	0.50	0.55	0.60	0.65	0.40	0.43	0.48	0.53	
		PI	1.07	1.07	1.07	1.07	1.07	1.07	1.07	1.07	1.06	1.06	1.06	1.06	1.06	1.06	1.06	1.06	
	-10	TC	5.05	5.04	5.04	5.04	5.31	5.42	5.42	5.42	5.45	5.45	5.45	5.45	5.78	5.78	5.78	5.78	
		S/T	0.65	0.71	0.76	0.82	0.55	0.60	0.66	0.71	0.50	0.55	0.60	0.65	0.40	0.44	0.49	0.53	
		PI	1.06	1.06	1.06	1.06	1.07	1.07	1.07	1.07	1.06	1.06	1.06	1.06	1.06	1.06	1.06	1.06	
	-5	TC	5.02	5.01	5.01	5.01	5.29	5.40	5.40	5.40	5.43	5.43	5.43	5.43	5.77	5.77	5.77	5.77	
		S/T	0.65	0.71	0.76	0.82	0.56	0.61	0.66	0.71	0.51	0.56	0.60	0.65	0.40	0.44	0.49	0.54	
		PI	1.06	1.06	1.06	1.06	1.06	1.06	1.06	1.06	1.06	1.06	1.06	1.06	1.07	1.07	1.07	1.07	
	0	TC	4.99	4.98	4.98	4.98	5.27	5.38	5.38	5.38	5.42	5.42	5.42	5.42	5.76	5.76	5.76	5.76	
		S/T	0.66	0.72	0.76	0.82	0.56	0.61	0.67	0.72	0.51	0.56	0.61	0.66	0.40	0.44	0.49	0.54	
		PI	1.07	1.06	1.06	1.07	1.07	1.07	1.07	1.07	1.06	1.06	1.06	1.06	1.07	1.07	1.07	1.07	
	5	TC	4.97	4.96	4.96	4.96	5.25	5.36	5.36	5.36	5.40	5.40	5.40	5.40	5.76	5.76	5.76	5.76	
		S/T	0.66	0.72	0.77	0.83	0.56	0.61	0.67	0.72	0.51	0.56	0.61	0.66	0.40	0.44	0.49	0.54	
		PI	1.08	1.07	1.07	1.08	1.08	1.08	1.08	1.08	1.07	1.07	1.07	1.07	1.08	1.08	1.08	1.08	
	10	TC	4.94	4.93	4.93	4.93	5.23	5.33	5.33	5.33	5.38	5.38	5.38	5.38	5.74	5.74	5.74	5.74	
		S/T	0.66	0.72	0.77	0.83	0.56	0.62	0.67	0.72	0.51	0.56	0.61	0.66	0.41	0.45	0.50	0.54	
		PI	1.09	1.09	1.09	1.09	1.09	1.09	1.09	1.09	1.09	1.09	1.09	1.09	1.09	1.09	1.09	1.09	
	15	TC	4.90	4.89	4.89	4.89	5.19	5.29	5.29	5.29	5.35	5.35	5.35	5.35	5.72	5.72	5.72	5.72	
		S/T	0.67	0.73	0.78	0.84	0.57	0.62	0.68	0.73	0.52	0.57	0.62	0.67	0.41	0.45	0.50	0.55	
		PI	1.12	1.12	1.12	1.12	1.12	1.12	1.12	1.12	1.11	1.11	1.11	1.11	1.11	1.11	1.11	1.11	
	20	TC	4.84	4.83	4.83	4.83	5.14	5.15	5.15	5.15	5.29	5.29	5.29	5.29	5.67	5.67	5.67	5.67	
		S/T	0.67	0.73	0.78	0.84	0.57	0.62	0.68	0.73	0.52	0.57	0.62	0.67	0.41	0.45	0.50	0.55	
		PI	1.16	1.16	1.16	1.16	1.16	1.16	1.16	1.16	1.15	1.15	1.15	1.15	1.15	1.15	1.15	1.15	
	25	TC	4.63	4.63	4.63	4.63	4.92	4.92	4.92	4.92	5.06	5.06	5.06	5.06	5.44	5.44	5.44	5.44	
		S/T	0.68	0.73	0.79	0.85	0.57	0.62	0.68	0.73	0.52	0.57	0.63	0.68	0.40	0.45	0.50	0.55	
		PI	1.28	1.28	1.28	1.28	1.28	1.28	1.28	1.28	1.28	1.28	1.28	1.28	1.28	1.28	1.28	1.28	
	30	TC	4.40	4.40	4.40	4.40	4.69	4.69	4.69	4.69	4.83	4.83	4.83	4.83	5.21	5.21	5.21	5.21	
		S/T	0.68	0.74	0.80	0.86	0.57	0.63	0.68	0.74	0.52	0.57	0.63	0.68	0.40	0.45	0.50	0.55	
		PI	1.40	1.40	1.40	1.40	1.40	1.40	1.40	1.40	1.40	1.40	1.40	1.40	1.41	1.41	1.41	1.41	
	35	TC	4.17	4.17	4.17	4.17	4.46	4.46	4.46	4.46	4.60	4.60	4.66	4.60	4.95	4.95	4.95	4.95	
		S/T	0.68	0.75	0.81	0.88	0.57	0.63	0.69	0.75	0.51	0.57	0.63	0.69	0.39	0.45	0.50	0.55	
		PI	1.53	1.53	1.53	1.53	1.53	1.53	1.53	1.53	1.54	1.54	1.54	1.54	1.55	1.55	1.55	1.55	
	40	TC	3.95	3.95	3.95	3.97	4.22	4.22	4.22	4.22	4.36	4.36	4.39	4.36	4.69	4.69	4.69	4.69	
		S/T	0.69	0.76	0.83	0.90	0.57	0.64	0.70	0.77	0.51	0.58	0.64	0.71	0.38	0.44	0.50	0.56	
		PI	1.69	1.69	1.69	1.69	1.70	1.70	1.70	1.70	1.71	1.71	1.71	1.71	1.72	1.72	1.72	1.72	
	46	TC	3.67	3.67	3.67	3.70	3.90	3.90	3.90	3.90	4.05	4.05	4.05	4.05	4.36	4.36	4.36	4.36	
		S/T	0.70	0.77	0.84	0.91	0.57	0.64	0.71	0.78	0.51	0.58	0.65	0.71	0.38	0.44	0.50	0.56	
		PI	1.88	1.88	1.88	1.88	1.89	1.89	1.89	1.89	1.90	1.90	1.90	1.90	1.91	1.91	1.91	1.91	
	50	TC	3.44	3.44	3.44	3.47	3.67	3.67	3.67	3.67	3.79	3.79	3.79	3.79	4.10	4.10	4.10	4.10	
		S/T	0.70	0.78	0.86	0.94	0.57	0.65	0.72	0.79	0.51	0.58	0.65	0.73	0.37	0.44	0.50	0.57	
		PI	2.04	2.04	2.04	2.04	2.05	2.05	2.05	2.05	2.06	2.06	2.06	2.06	2.07	2.07	2.07	2.07	
480	-15	TC	5.16	5.16	5.16	5.16	5.45	5.45	5.45	5.45	5.57	5.57	5.57	5.57	5.92	5.92	5.92	5.92	
		S/T	0.66	0.72	0.98	1.00	0.55	0.61	0.67	0.72	0.49	0.55	0.61	0.67	0.38	0.42	0.48	0.53	
		PI	1.09	1.09	1.09	1.09	1.09	1.09	1.09	1.09	1.09	1.09	1.09	1.09	1.08	1.08	1.08	1.08	
	-10	TC	5.13	5.13	5.13	5.13	5.42	5.42	5.42	5.42	5.55	5.55	5.55	5.55	5.90	5.90	5.90	5.90	
		S/T	0.66	0.73	0.99	1.00	0.55	0.61	0.67	0.73	0.49	0.55	0.61	0.67	0.38	0.43	0.49	0.53	
		PI	1.08	1.08	1.08	1.08	1.08	1.08	1.08	1.08	1.09	1.09	1.09	1.09	1.08	1.08	1.08	1.08	
	-5	TC	5.10	5.10	5.10	5.10	5.40	5.40	5.40	5.40	5.53	5.53	5.53	5.53	5.89	5.89	5.89	5.89	
		S/T	0.66	0.73	0.99	1.00	0.56	0.61	0.67	0.73	0.50	0.56	0.61	0.67	0.38	0.43	0.49	0.54	
		PI	1.08	1.08	1.08	1.08	1.08	1.08	1.08	1.08	1.09	1.09	1.09	1.09	1.08	1.08	1.08	1.08	
	0	TC	5.08	5.08	5.08	5.08	5.38	5.38	5.38	5.38	5.51	5.51	5.51	5.51	5.88	5.88	5.88	5.88	
		S/T	0.67	0.74	1.00	1.00	0.56	0.62	0.68	0.74	0.50	0.56	0.62	0.68	0.38	0.43	0.49	0.54	
		PI	1.08	1.08	1.08	1.08	1.09	1.09	1.09	1.09	1.09	1.09	1.09	1.09	1.09	1.09	1.09	1.09	
	5	TC	5.05	5.05	5.05	5.05	5.36	5.36	5.36	5.36	5.49	5.49	5.49	5.49	5.88	5.88	5.88	5.88	
		S/T	0.67	0.74	1.00	1.00	0.56	0.62	0.68	0.74	0.50	0.56	0.62	0.68	0.38	0.43	0.49	0.54	
		PI	1.09	1.09	1.09	1.09	1.10	1.10	1.10	1.10	1.10	1.10	1.10	1.10	1.10	1.10	1.10	1.10	
	10	TC	5.02	5.02	5.02	5.02	5.33	5.33	5.33	5.33	5.47	5.47	5.47	5.47	5.86	5.86	5.86	5.86	
		S/T	0.67	0.74	1.00	1.00	0.56	0.62	0.68	0.74	0.50	0.56	0.62	0.68	0.39	0.44	0.50	0.54	
		PI	1.11	1.11	1.11	1.11	1.11	1.11	1.11	1.11	1.12	1.12	1.12	1.12	1.11	1.11	1.11	1.11	
	15	TC	4.98	4.98	4.98	4.98	5.29	5.29	5.29	5.29	5.44	5.44	5.44	5.44	5.84	5.84	5.84	5.84	
		S/T	0.68	0.75	0.81	0.88	0.57	0.63	0.69	0.75	0.51	0.57	0.63	0.69	0.39	0.44	0.50	0.55	
		PI	1.14	1.14	1.14	1.14	1.14	1.14	1.14	1.14	1.14	1.14	1.14	1.14	1.13	1.13	1.13	1.13	
	20	TC	4.92	4.92	4.92	4.92	5.24	5.24	5.24	5.24	5.38	5.38	5.38	5.38	5.79	5.79	5.79	5.79	
		S/T	0.68	0.75	0.81	0.88	0.57	0.63	0.69	0.75	0.51	0.57	0.63	0.69	0.39	0.44	0.50	0.55	
		PI	1.18	1.18	1.18	1.18	1.18	1.18	1.18	1.18	1.18	1.18	1.18	1.18	1.17	1.17	1.17	1.17	
	25	TC	4.72	4.72	4.72	4.78	5.01	5.01	5.01	5.01	5.15	5.15	5.15	5.15	5.53	5.53	5.53	5.53	
		S/T	0.69	0.76	0.82	0.89	0.57	0.63	0.70	0.76	0.51	0.58	0.64	0.70	0.38	0.44	0.50	0.56	
		PI	1.31	1.31	1.31	1.31	1.31	1.31	1.31	1.31	1.31	1.31	1.31	1.31	1.31	1.31	1.31	1.31	
	30	TC	4.49	4.49	4.49	4.55	4.78	4.78	4.78	4.78	4.92	4.92	4.92	4.92	5.30	5.30	5.30	5.30	
		S/T	0.69	0.76	0.84	0.90	0.57	0.64	0.70	0.77	0.51	0.58	0.64	0.71	0.38	0.44	0.50	0.56	
		PI	1.42	1.42	1.42	1.42	1.43	1.43	1.43	1.43	1.43	1.43	1.43	1.43	1.43	1.43	1.43	1.43	
	35	TC	4.26	4.26	4.26	4.29	4.55	4.55	4.55	4.55	4.66	4.66	4.75	4.66	5.04	5.04	5.04	5.04	
		S/T	0.70	0.77	0.85	0.92	0.57	0.64	0.71	0.78	0.51	0.58	0.65	0.72	0.37	0.44	0.50	0.57	
		PI	1.56	1.56	1.56	1.56	1.56	1.56	1.56	1.56	1.57	1.57	1.57	1.57	1.57	1.57	1.57	1.57	
	40	TC	4.00	4.00	4.01	4.04	4.27	4.27	4.27	4.27	4.39	4.39	4.44	4.39	4.75	4.75	4.75	4.75	
		S/T	0.71	0.80	0.88	0.96	0.58	0.65	0.73	0.81	0.51	0.59	0.66	0.74	0.37	0.44	0.51	0.58	
		PI	1.72	1.72	1.72	1.72	1.72	1.72	1.72	1.72	1.73	1.73	1.73	1.73	1.74	1.74	1.74	1.74	
	46	TC	3.70	3.70	3.73	3.76	3.96	3.96	3.96	3.96	4.08	4.08	4.08	4.08	4.42	4.42	4.42	4.42	
		S/T	0.72	0.81	0.89	0.97	0.58	0.66	0.74	0.82	0.51	0.59	0.67	0.75	0.36	0.44	0.51	0.58	
		PI	1.91	1.91	1.91	1.91	1.92	1.92	1.92	1.92	1.92	1.92	1.92	1.92	1.94	1.94	1.94	1.94	
	50	TC	3.47	3.47	3.50	3.53	3.70	3.70	3.70	3.70	3.85	3.85	3.85	3.85	4.16	4.16	4.16	4.16	
		S/T	0.73	0.83	0.92	1.00	0.59	0.67	0.76	0.85	0.52	0.60	0.68	0.77	0.36	0.44	0.51	0.91	
		PI	2.07	2.07	2.07	2.07	2.08	2.08	2.08	2.08	2.09	2.09	2.09	2.09	2.10	2.10	2.10	2.10	

560	-15	TC	5.28	5.28	5.28	5.34	5.54	5.54	5.54	5.54	5.69	5.69	5.69	5.69	6.04	6.04	6.04	6.04
		S/T	0.68	0.74	1.00	1.00	0.55	0.62	0.69	0.98	0.49	0.56	0.63	0.70	0.37	0.42	0.48	0.55
		PI	1.11	1.11	1.11	1.11	1.10	1.10	1.10	1.10	1.11	1.11	1.11	1.11	1.10	1.10	1.10	1.10
	-10	TC	5.25	5.25	5.25	5.31	5.51	5.51	5.51	5.51	5.66	5.66	5.66	5.66	6.02	6.02	6.02	6.02
		S/T	0.68	0.75	1.00	1.00	0.55	0.62	0.69	0.98	0.49	0.56	0.63	0.70	0.37	0.43	0.49	0.55
		PI	1.11	1.11	1.11	1.11	1.10	1.10	1.10	1.10	1.10	1.10	1.10	1.10	1.10	1.10	1.10	1.10
	-5	TC	5.22	5.22	5.22	5.28	5.49	5.49	5.49	5.49	5.64	5.64	5.64	5.64	6.00	6.00	6.00	6.00
		S/T	0.68	0.75	1.00	1.00	0.56	0.62	0.69	0.99	0.50	0.57	0.63	0.70	0.37	0.43	0.49	0.56
		PI	1.11	1.11	1.11	1.11	1.10	1.10	1.10	1.10	1.10	1.10	1.10	1.10	1.10	1.10	1.10	1.10
	0	TC	5.19	5.19	5.19	5.25	5.47	5.47	5.47	5.47	5.63	5.63	5.63	5.63	6.00	6.00	6.00	6.00
		S/T	0.69	0.75	1.00	1.00	0.56	0.63	0.70	0.99	0.50	0.57	0.64	0.71	0.37	0.43	0.49	0.56
		PI	1.11	1.11	1.11	1.11	1.10	1.10	1.10	1.10	1.11	1.11	1.11	1.11	1.11	1.11	1.11	1.11
	5	TC	5.17	5.17	5.17	5.23	5.44	5.44	5.44	5.44	5.61	5.61	5.61	5.61	5.99	5.99	5.99	5.99
		S/T	0.69	0.76	1.00	1.00	0.56	0.63	0.70	1.00	0.50	0.57	0.64	0.71	0.37	0.43	0.49	0.56
		PI	1.12	1.12	1.12	1.12	1.11	1.11	1.11	1.11	1.12	1.12	1.12	1.12	1.11	1.11	1.11	1.11
	10	TC	5.14	5.14	5.14	5.20	5.42	5.42	5.42	5.42	5.59	5.59	5.59	5.59	5.98	5.98	5.98	5.98
		S/T	0.69	0.76	1.00	1.00	0.56	0.63	0.70	1.00	0.50	0.57	0.64	0.71	0.38	0.44	0.50	0.56
		PI	1.14	1.14	1.14	1.14	1.13	1.13	1.13	1.13	1.13	1.13	1.13	1.13	1.13	1.13	1.13	1.13
	15	TC	5.09	5.09	5.09	5.15	5.38	5.38	5.38	5.38	5.55	5.55	5.55	5.55	5.95	5.95	5.95	5.95
		S/T	0.70	0.77	0.85	0.92	0.57	0.64	0.71	0.78	0.51	0.58	0.65	0.72	0.38	0.44	0.50	0.57
		PI	1.17	1.17	1.17	1.17	1.16	1.16	1.16	1.16	1.16	1.16	1.16	1.16	1.15	1.15	1.15	1.15
	20	TC	5.04	5.04	5.04	5.09	5.33	5.33	5.33	5.33	5.50	5.50	5.50	5.50	5.90	5.90	5.90	5.90
		S/T	0.70	0.77	0.85	0.92	0.57	0.64	0.71	0.78	0.51	0.58	0.65	0.72	0.38	0.44	0.50	0.57
		PI	1.21	1.21	1.21	1.21	1.20	1.20	1.20	1.20	1.20	1.20	1.20	1.20	1.19	1.19	1.19	1.19
	25	TC	4.81	4.81	4.81	4.86	5.09	5.09	5.09	5.09	5.24	5.24	5.24	5.24	5.64	5.64	5.64	5.64
		S/T	0.70	0.78	0.86	0.93	0.57	0.65	0.72	0.79	0.51	0.58	0.66	0.73	0.37	0.44	0.50	0.57
		PI	1.33	1.33	1.33	1.33	1.33	1.33	1.33	1.33	1.33	1.33	1.33	1.33	1.33	1.33	1.33	1.33
	30	TC	4.58	4.58	4.58	4.63	4.86	4.86	4.86	4.86	5.01	5.01	5.01	5.01	5.38	5.38	5.38	5.38
		S/T	0.71	0.79	0.88	0.95	0.58	0.65	0.73	0.81	0.51	0.59	0.66	0.74	0.37	0.44	0.51	0.58
		PI	1.45	1.45	1.45	1.45	1.45	1.45	1.45	1.45	1.45	1.45	1.45	1.45	1.46	1.46	1.46	1.46
	35	TC	4.35	4.35	4.40	4.46	4.61	4.61	4.61	4.61	4.75	4.75	**4.84**	4.75	5.12	5.12	5.12	5.12
		S/T	0.72	0.81	0.89	0.97	0.58	0.66	0.74	0.82	0.51	0.59	**0.67**	0.75	0.36	0.44	0.51	0.58
		PI	1.59	1.59	1.59	1.59	1.59	1.59	1.59	1.59	1.60	1.60	**1.60**	1.60	1.61	1.61	1.61	1.61
	40	TC	4.07	4.07	4.12	4.16	4.33	4.33	4.33	4.33	4.47	4.47	4.52	4.47	4.83	4.83	4.83	4.83
		S/T	0.74	0.84	0.93	1.00	0.59	0.68	0.77	0.86	0.52	0.60	0.69	0.78	0.36	0.44	0.52	0.90
		PI	1.75	1.75	1.75	1.75	1.76	1.76	1.76	1.76	1.76	1.76	1.76	1.76	1.78	1.78	1.78	1.78
	46	TC	3.76	3.76	3.79	3.82	4.02	4.02	4.02	4.02	4.16	4.16	4.16	4.16	4.51	4.51	4.51	4.51
		S/T	0.75	0.85	0.95	1.00	0.59	0.69	0.78	0.87	0.52	0.61	0.70	0.79	0.35	0.44	0.52	0.92
		PI	1.95	1.95	1.95	1.95	1.96	1.96	1.96	1.96	1.96	1.96	1.96	1.96	1.98	1.98	1.98	1.98
	50	TC	3.53	3.53	3.56	3.59	3.79	3.79	3.79	3.82	3.90	3.90	3.90	3.90	4.25	4.25	4.25	4.25
		S/T	0.77	0.87	0.97	1.00	0.60	0.70	0.80	0.89	0.52	0.62	0.72	0.81	0.35	0.44	0.53	0.97
		PI	2.11	2.11	2.11	2.11	2.12	2.12	2.12	2.12	2.13	2.13	2.13	2.13	2.14	2.14	2.14	2.14

TC:Total Cooling Capacity (kW)

S/T:Sensible Cooling Capacity Ratio

PI:Power Input(kW)

Note: The table shows the case where the operation frequency of a compressor is fixed.

7.2 Heating

12k						[SI_Unit]			
INDOOR AIRFLOW (CMH)	HEATING PERFORMANCE AT INDOOR DRY BULB TEMPERATURE								
	OUTDOOR DB(°C)	TC:TOTAL CAPACITY IN KILOWATTS (KW)				PI:TOTAL POWER IN KILOWATTS (KW)			
		Indoor Conditions (DB °C)				Indoor Conditions (DB °C)			
		16.0	20.0	22.0	24.0	16.0	20.0	22.0	24.0
386	-15.0	2.47	2.45	2.45	2.42	1.17	1.21	1.19	1.20
	-10.0	2.64	2.61	2.61	2.59	1.25	1.29	1.27	1.28
	-7.0	2.77	2.74	2.74	2.71	1.32	1.37	1.35	1.36
	-5.6	2.86	2.83	2.83	2.80	1.29	1.31	1.32	1.32
	-2.8	2.94	2.91	2.91	2.88	1.24	1.25	1.26	1.27
	0.0	3.00	2.97	2.94	2.94	1.18	1.20	1.20	1.21
	2.8	3.18	3.15	3.12	3.09	1.15	1.16	1.16	1.17
	5.6	3.44	3.41	3.38	3.35	1.11	1.11	1.12	1.12
	7.0	3.73	3.69	3.61	3.58	1.09	1.07	1.10	1.10
	11.1	3.93	3.87	3.84	3.81	1.02	1.02	1.02	1.02
	13.9	4.07	4.04	4.01	3.98	0.97	0.97	0.97	0.97
	16.7	4.25	4.19	4.16	4.13	0.92	0.92	0.91	0.91
	18.0	4.33	4.28	4.25	4.22	0.89	0.89	0.89	0.89
466	-15.0	2.54	2.51	2.49	2.49	1.18	1.22	1.20	1.21
	-10.0	2.71	2.68	2.65	2.65	1.26	1.30	1.28	1.29
	-7.0	2.84	2.81	2.78	2.78	1.34	1.38	1.36	1.37
	-5.6	2.94	2.91	2.88	2.88	1.30	1.32	1.33	1.34
	-2.8	3.03	3.00	2.97	2.97	1.25	1.26	1.27	1.28
	0.0	3.09	3.03	3.03	3.00	1.20	1.21	1.21	1.22
	2.8	3.26	3.20	3.18	3.18	1.16	1.17	1.17	1.17
	5.6	3.53	3.50	3.47	3.44	1.12	1.12	1.13	1.13
	7.0	3.81	3.78	3.69	3.66	1.10	1.08	1.11	1.11
	11.1	4.01	3.96	3.93	3.90	1.03	1.03	1.03	1.03
	13.9	4.19	4.13	4.10	4.07	0.98	0.98	0.98	0.98
	16.7	4.33	4.28	4.25	4.22	0.93	0.92	0.92	0.92
	18.0	4.42	4.36	4.33	4.30	0.90	0.90	0.90	0.90
550	-15.0	2.55	2.53	2.53	2.50	1.19	1.24	1.22	1.23
	-10.0	2.72	2.70	2.70	2.67	1.27	1.32	1.30	1.31
	-7.0	2.85	2.83	2.83	2.80	1.35	1.40	1.38	1.39
	-5.6	2.94	2.91	2.91	2.88	1.32	1.34	1.34	1.35
	-2.8	3.06	3.00	3.00	2.97	1.27	1.28	1.29	1.29
	0.0	3.12	3.06	3.06	3.03	1.21	1.22	1.23	1.23
	2.8	3.26	3.23	3.20	3.18	1.17	1.17	1.18	1.18
	5.6	3.55	3.53	3.50	3.47	1.13	1.14	1.14	1.14
	7.0	3.84	3.81	3.72	3.69	1.11	1.09	1.12	1.12
	11.1	4.04	3.98	3.96	3.93	1.03	1.04	1.04	1.04
	13.9	4.22	4.16	4.13	4.10	0.98	0.98	0.98	0.98
	16.7	4.39	4.33	4.30	4.25	0.93	0.93	0.93	0.93
	18.0	4.45	4.39	4.36	4.33	0.91	0.91	0.90	0.90

Note: The table shows the case where the operation frequency of a compressor is fixed.

16k									[SI_Unit]
INDOOR AIRFLOW (CMH)	HEATING PERFORMANCE AT INDOOR DRY BULB TEMPERATURE								
	OUTDOOR DB(°C)	TC:TOTAL CAPACITY IN KILOWATTS (KW)				PI:TOTAL POWER IN KILOWATTS (KW)			
		Indoor Conditions (DB °C)				Indoor Conditions (DB °C)			
		16.0	20.0	22.0	24.0	16.0	20.0	22.0	24.0
400	-15.0	3.86	3.81	3.81	3.78	1.66	1.72	1.69	1.70
	-10.0	4.12	4.07	4.07	4.04	1.77	1.84	1.81	1.82
	-7.0	4.32	4.26	4.26	4.23	1.88	1.95	1.92	1.93
	-5.6	4.32	4.26	4.26	4.23	1.84	1.86	1.87	1.89
	-2.8	4.32	4.26	4.26	4.23	1.76	1.78	1.79	1.80
	0.0	4.29	4.23	4.21	4.18	1.69	1.70	1.71	1.72
	2.8	4.38	4.32	4.29	4.26	1.63	1.64	1.64	1.65
	5.6	4.64	4.58	4.55	4.52	1.56	1.57	1.58	1.58
	7.0	4.90	4.84	4.78	4.75	1.55	1.52	1.56	1.56
	11.1	5.01	4.95	4.92	4.90	1.44	1.45	1.45	1.45
	13.9	5.13	5.04	5.01	4.98	1.37	1.37	1.37	1.37
	16.7	5.21	5.16	5.10	5.07	1.30	1.30	1.30	1.30
	18.0	5.27	5.19	5.16	5.13	1.27	1.27	1.26	1.26
480	-15.0	3.92	3.90	3.87	3.85	1.68	1.74	1.71	1.72
	-10.0	4.19	4.16	4.14	4.11	1.79	1.85	1.83	1.84
	-7.0	4.39	4.36	4.33	4.30	1.90	1.97	1.94	1.95
	-5.6	4.41	4.38	4.35	4.32	1.86	1.88	1.89	1.90
	-2.8	4.41	4.38	4.35	4.32	1.78	1.80	1.81	1.82
	0.0	4.38	4.32	4.29	4.26	1.71	1.72	1.73	1.74
	2.8	4.47	4.41	4.38	4.35	1.64	1.66	1.66	1.67
	5.6	4.73	4.67	4.61	4.58	1.58	1.59	1.60	1.60
	7.0	4.99	4.92	4.87	4.84	1.56	1.54	1.58	1.58
	11.1	5.10	5.04	5.01	4.98	1.46	1.46	1.47	1.47
	13.9	5.21	5.13	5.10	5.07	1.39	1.39	1.39	1.39
	16.7	5.30	5.24	5.19	5.16	1.32	1.32	1.32	1.31
	18.0	5.36	5.27	5.24	5.19	1.29	1.28	1.28	1.28
560	-15.0	3.99	3.94	3.94	3.91	1.69	1.76	1.73	1.74
	-10.0	4.26	4.21	4.21	4.18	1.81	1.87	1.84	1.85
	-7.0	4.47	4.41	4.41	4.38	1.92	1.99	1.96	1.97
	-5.6	4.47	4.41	4.41	4.38	1.88	1.90	1.91	1.92
	-2.8	4.47	4.41	4.38	4.38	1.80	1.82	1.83	1.84
	0.0	4.41	4.35	4.35	4.32	1.72	1.74	1.75	1.75
	2.8	4.52	4.47	4.44	4.41	1.66	1.67	1.68	1.68
	5.6	4.76	4.70	4.67	4.64	1.60	1.60	1.61	1.61
	7.0	5.04	4.98	4.92	4.90	1.58	1.55	1.59	1.59
	11.1	5.16	5.10	5.07	5.04	1.47	1.47	1.48	1.48
	13.9	5.27	5.19	5.16	5.13	1.40	1.40	1.40	1.40
	16.7	5.39	5.30	5.24	5.21	1.33	1.33	1.32	1.32
	18.0	5.42	5.33	5.30	5.27	1.30	1.29	1.29	1.29

Note: The table shows the case where the operation frequency of a compressor is fixed.

8. Noise Criterion Curves

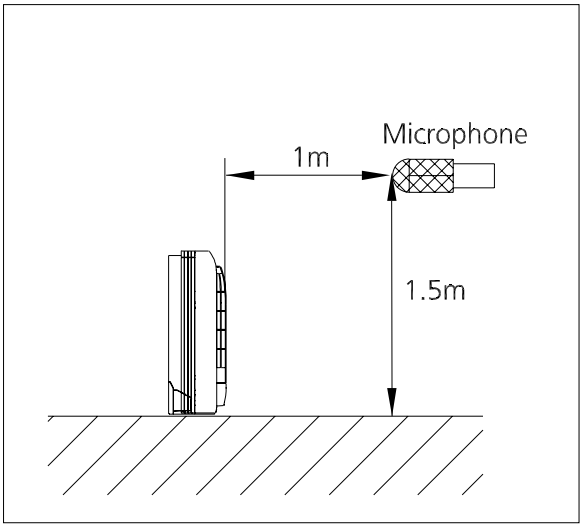

Notes:

-Sound measured at 1.5m away from the noisiest location of the unit.

-Data is valid at free field condition

-Data is valid at nominal operation condition

-Reference acoustic pressure OdB = 20μPa

-Sound level will vary depending on a range of factors such as the construction -(acoustic absorption coefficient) of particular room in which the equipment is installed.

-The operating conditions are assumed to be standard.

MFAU-12HRFNX-QRD0W(GA)

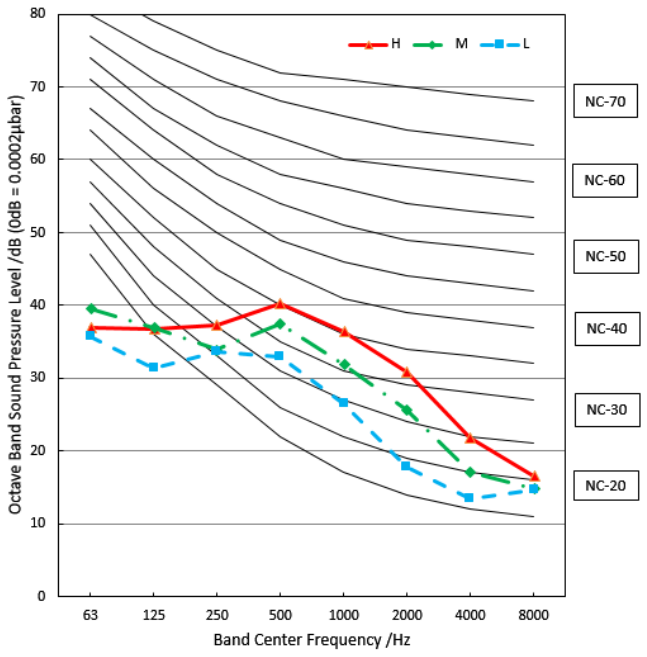

MFAU-16HRFN8-QRD0W(GA)

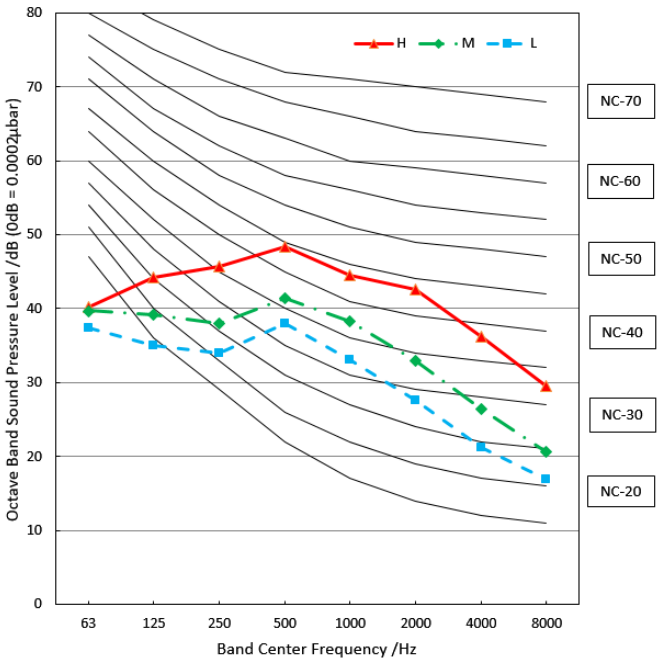

9. Electrical Characteristics

Capacity (Btu/h)		12k~18k
OUDOOR UNIT POWER	Phase	1-phase
	Frequency and Voltage	220-240V, 50Hz
	Power Wiring (mm^2)	3×1.5
	Circuit Breaker/ Fuse (A)	25/20
Indoor/Outdoor Connecting Wiring	Weak Electric Signal)(mm^2)	
	Strong Electric Signal(mm^2)	4×1.0

10. Electrical Wiring Diagrams

IDU Model	IDU Wiring Diagram
MFAU-12HRFNX-QRD0W(GA)	16022700002988
MFAU-16HRFN8-QRD0W(GA)	

Abbreviation	Paraphrase
Y/G	Yellow-Green Conductor
FAN	Indoor Direct Current FAN
M1	Upper Outlet Swing Motor
M2	Lower Outlet Swing Motor
L	LIVE
N	NEUTRAL
TO CCM Comm.Bus	Central Controller
RT1	Indoor Room Temperature
RT2	Coil Temperature of Indoor Heat Exchanger
XP1-XP5, XS1-XS5	Connectors
XT1	4-Way Terminal

Indoor unit wiring diagram: 16022700002988

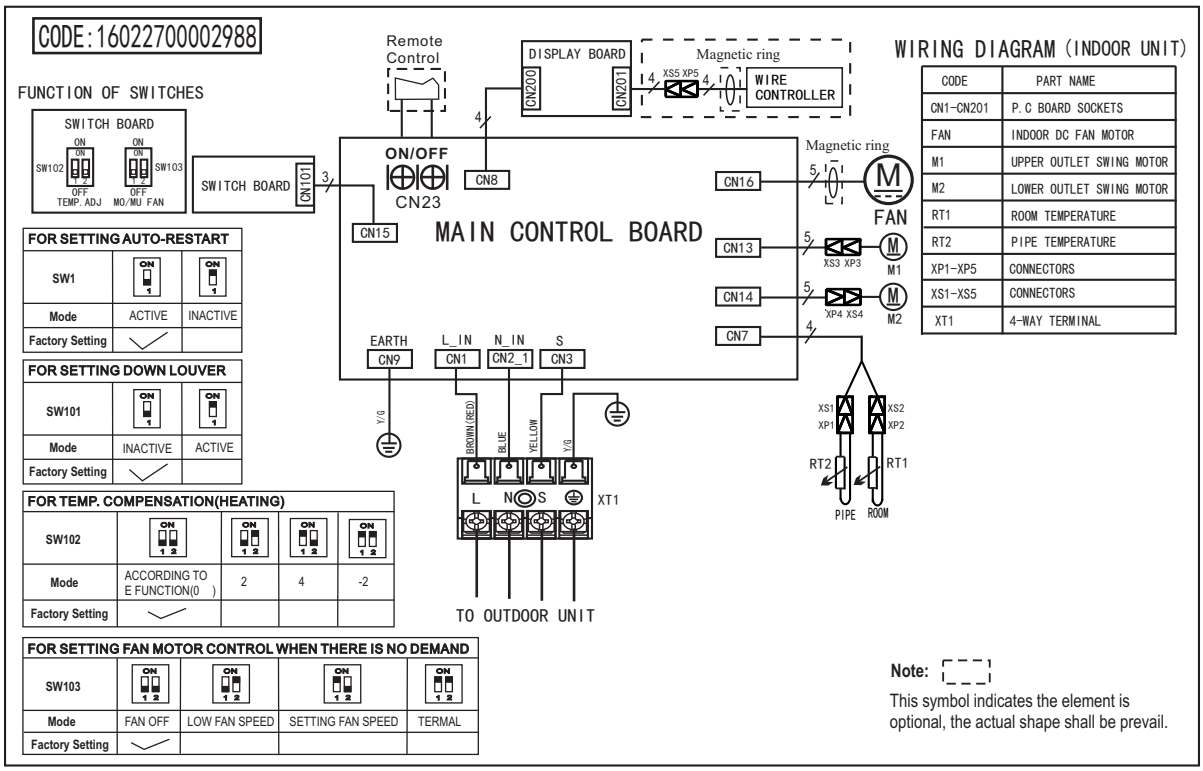

10.1 Micro-Switch Introduce:

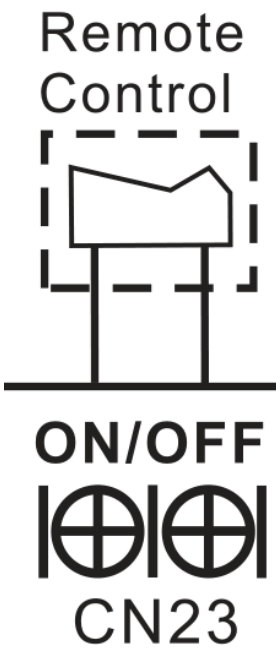

A. For remote control (ON-OFF) terminal port CN23 and short connector of JR6

1. Remove the short connector of JR6 when you use ON-OFF function;
2. When remote switch off (OPEN); the unit would be off;
3. When remote switch on (CLOSE); the unit would be on;
4. When close/open the remote switch, the unit would be responded the demand within 2 seconds;
5. When the remote switch on, you can use remote controller/ wire controller to select the mode what you want; when the remote switch off, the unit would not respond the demand from remote controller/wire controller.
when the remote switch off, but the remote controller/wire controller are on, CP code would be shown on the display board.
6. The voltage of the port is 12V DC, design Max. current is 5mA.

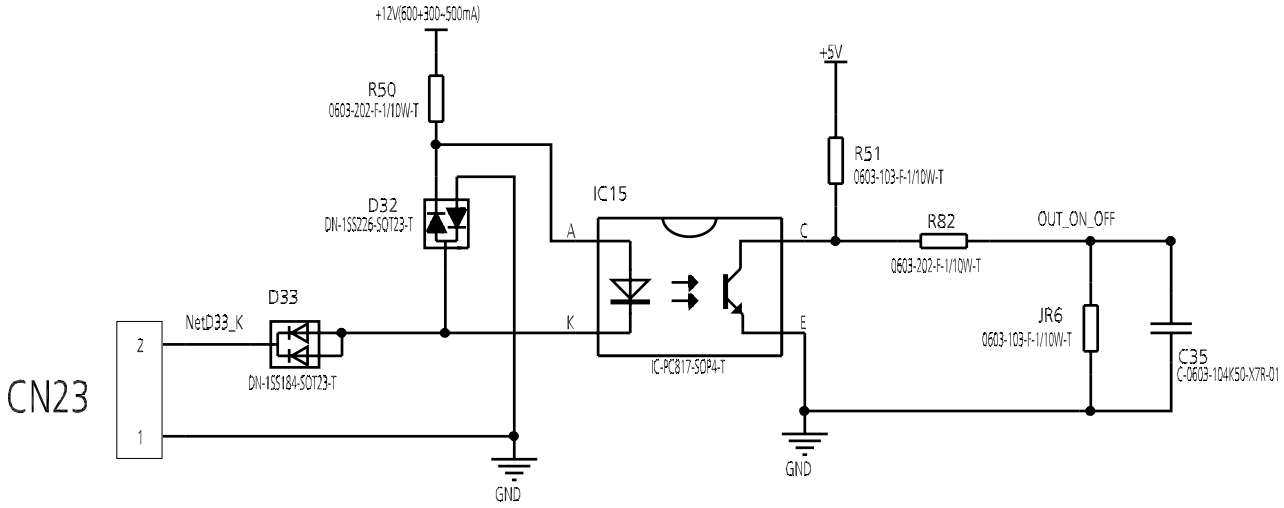

10.2 Micro-Switch Introduce:



For Setting Auto-Restart		
SW1	ON 1	ON 1
Mode	ACTIVE	INACTIVE
Factory Setting	✓	

A. Micro-switch SW1 is for selection of auto-restart function.

Range: Active, inactive



For Setting Down louver		
SW101	ON 1	ON 1
Mode	INACTIVE	ACTIVE
Factory Setting	✓	

B. Take off the panel, you can see the switch SW101 which is used for selecting both air outlets or upper air outlet only.

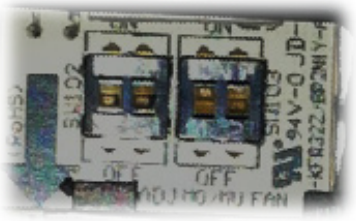

FOR TEMP. COMPENSATION(HEATING)				
SW102	ON 1 2	ON 1 2	ON 1 2	ON 1 2
Mode	According to E Function (0℃)	2℃	4℃	-2℃
Factory Setting	✓			

C. Micro-switch SW102 is for selection of temperature compensation in heating mode. This helps to reduce the real temperature difference between ceiling and floor so that the unit could run properly. If the unit is on-floor installed, 0 should be chosen.

Range: E function (reserved for special customizing) /0°C, 2°C, 4°C, -2°C

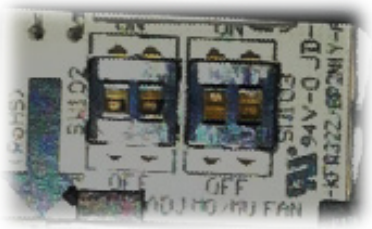

For Setting Fan Motor Control then No Power Request				
SW103	ON 1 2	ON 1 2	ON 1 2	ON 1 2
Mode	FAN OFF	LOW FAN SPEED	SETTING FAN SPEED	TERMAL
Factory Setting	✓			

D. Micro-switch SW103 is for selection of indoor FAN ACTION if room temperature reaches the setponit and the compressor stops.

Range: OFF (in 127s), Low Speed, Setting Speed, Termal (runs for 1 minute ever 4-minute stop).

Indoor Unit-Compact Cassette

Contents

1. Feature....2
2. Dimensional Drawings....4
3. Part names....5
4. Service Place....6
5. Accessories....7
6 Air Velocity and Temperature Distributions....8
7. Capacity Tables....16
8. Noise Criterion Curves....22
9. Electrical Characteristics....23
10. Electrical Wiring Diagrams....23

1. Feature

1.1 Compact design

- The body size is 570×260×570mm, it's just smaller than the ceiling board, so it's very easy for installation and will not damage the decoration. The panel size is 647×50×647mm.
- The hooks are designed in the four corners of the body, which can save installation space.

1.2 Fire-proof Controller Box

- Electrical control box adopts new design which can meet higher fire safety requirements.

1.3 Reserved remote on-off and alarm ports(Optional for fixed-speed units, standard for inverter units)

- Remote on-off: With the reserved ports. a remote switch can be easily connected to realize remote control.
- Alarm: The built-in PCB can output alarm signal, which achieve setting up an external alarm light or vibration gauge possible.



1.4 Build-in Drain Pump

- The drain pump can lift the condensed water up to 750mm.
- It's convenient to install drainage piping under most space condition.

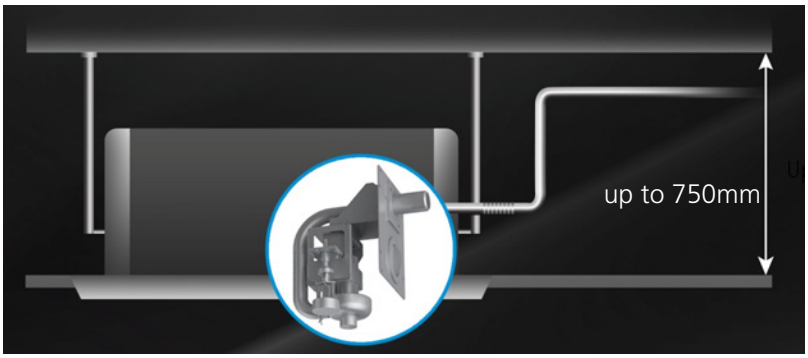

1.5 Fresh Air

- Fresh air intake function brings you fresh and comfortable air feeling.



1.6 Wired Controller(Optional)

- Compared with infrared remote controller, wired controller can be fixed on the wall and avoid mislaying. It's mainly used for commercial zone and makes air conditioner control more convenient.

1.7 Louver Position Memory (Standard for ERP models)

- When you start the unit next time, the angle of horizontal louver will automatically move to the same position as you set last time.

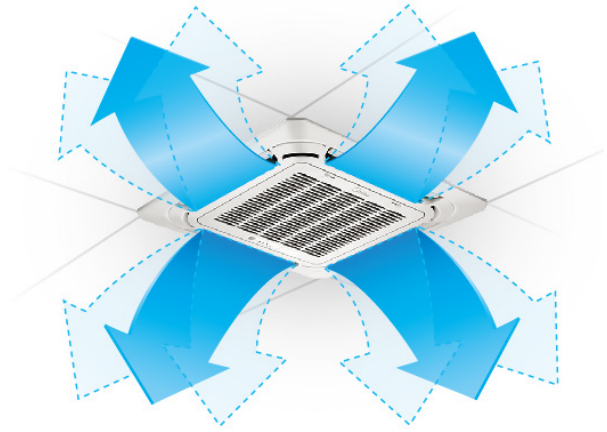

Previous Air-Flow Angle

2. Dimensional Drawings

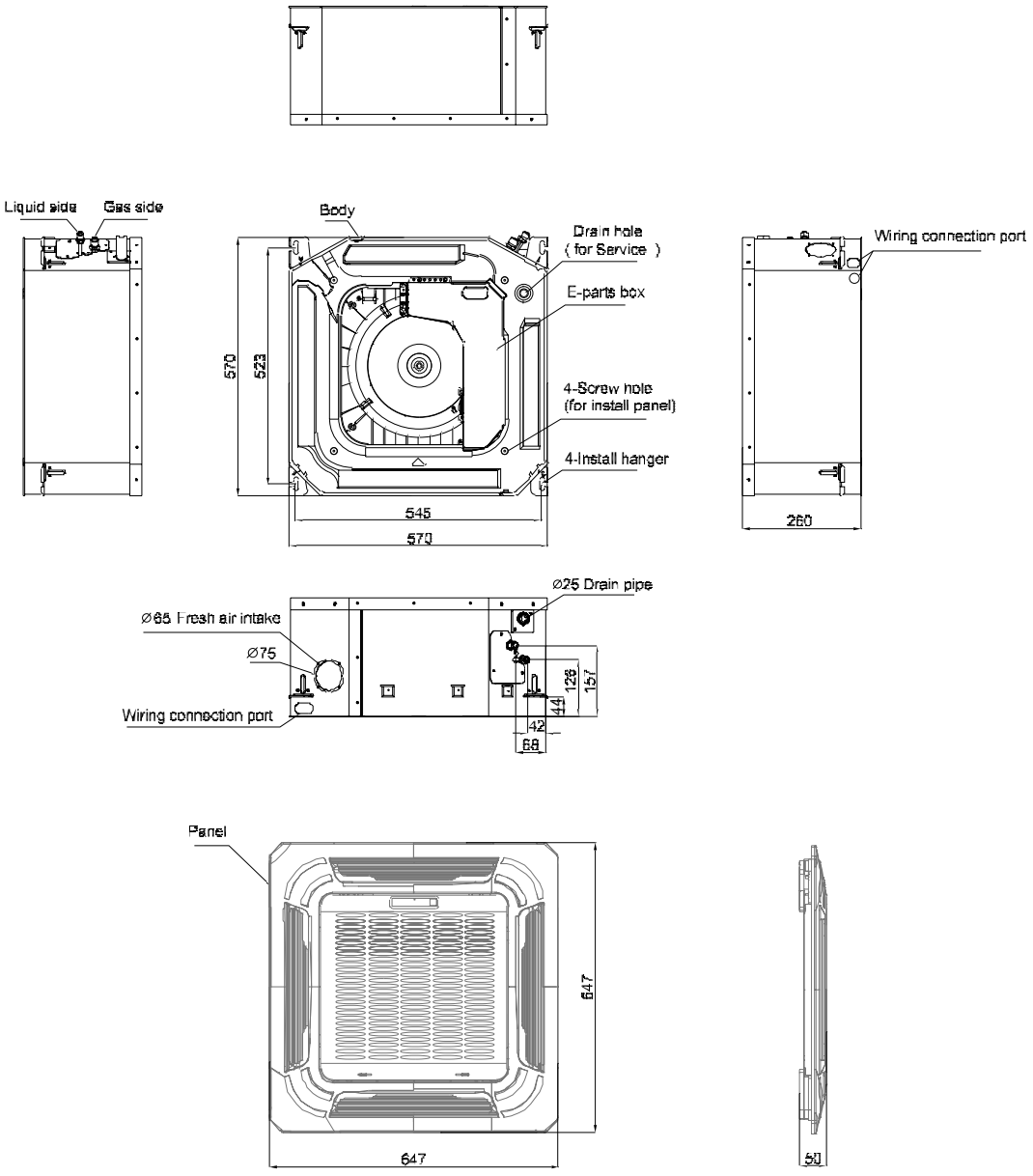

3. Part names

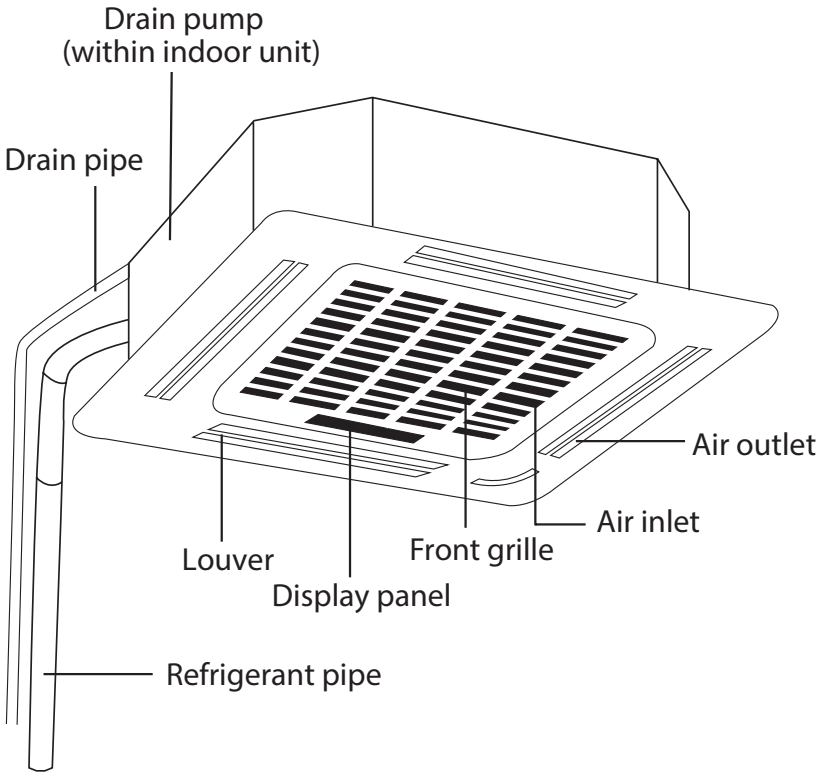
Drain pump
(within indoor unit)
Drain pipe
Air outlet
Air inlet
Front grille
Louver
Display panel
Refrigerant pipe

4. Service Place

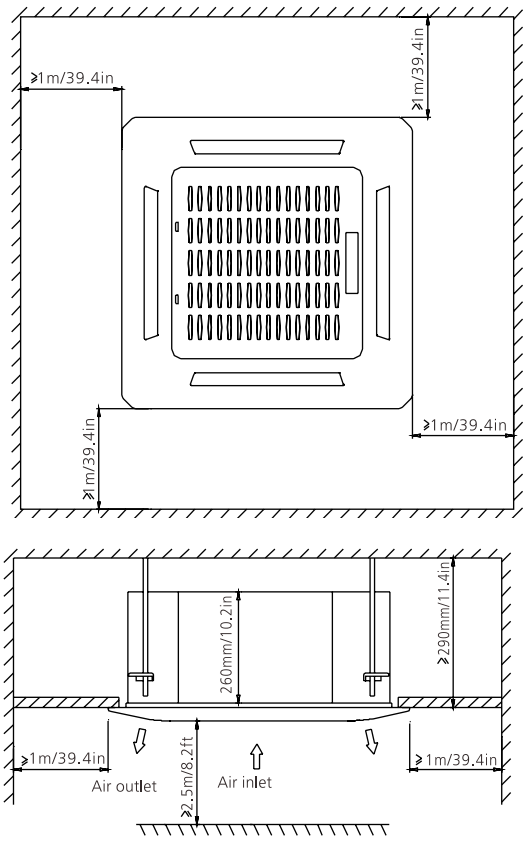

5. Accessories

The air conditioning system comes with the following accessories. Use all of the installation parts and accessories to install the air conditioner. Improper installation may result in water leakage, electrical shock and fire, or equipment failure.

	Name	Shape	Quantity
Indoor unit installation	Installation paper template (some models)	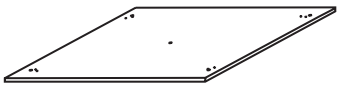	1
Refrigeration Fittings	Insulation for gas pipe fitting (some models)		1
	Insulation for liquid pipe fitting (some models)		1
Drainpipe Fittings	Outlet pipe sheath(some models)		1
	Outlet pipe clasp(some models)		1
	Drain joint (some models)	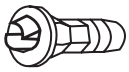	1
	Seal ring (some models)	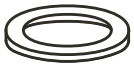	1
EMC Magnetic Ring (some models)	Magnetic ring (wrap the electric wires S1 & S2 (P & Q & E) around the magnetic ring twice)	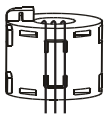	1
	Magnetic ring (Hitch it on the connective cable between indoor unit and outdoor unit after installation.)	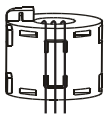	1
Installation Accessory (some models)	Ceiling hook	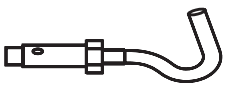	4
	Suspension bolt		4
	Throttle (some units)		1
	Anti-shock rubber		1
	Owner's manual&Installation manual		1

Optional accessories:

- There are two types of remote controls: wired and wireless.
- Select a remote controller based on customer preferences and requirements and install in an appropriate place.
- Refer to catalogues and technical literature for guidance on selecting a suitable remote controller.

6. Air Velocity and Temperature Distributions

12K

Discharge Angle 30°

Cooling airflow velocity distributions

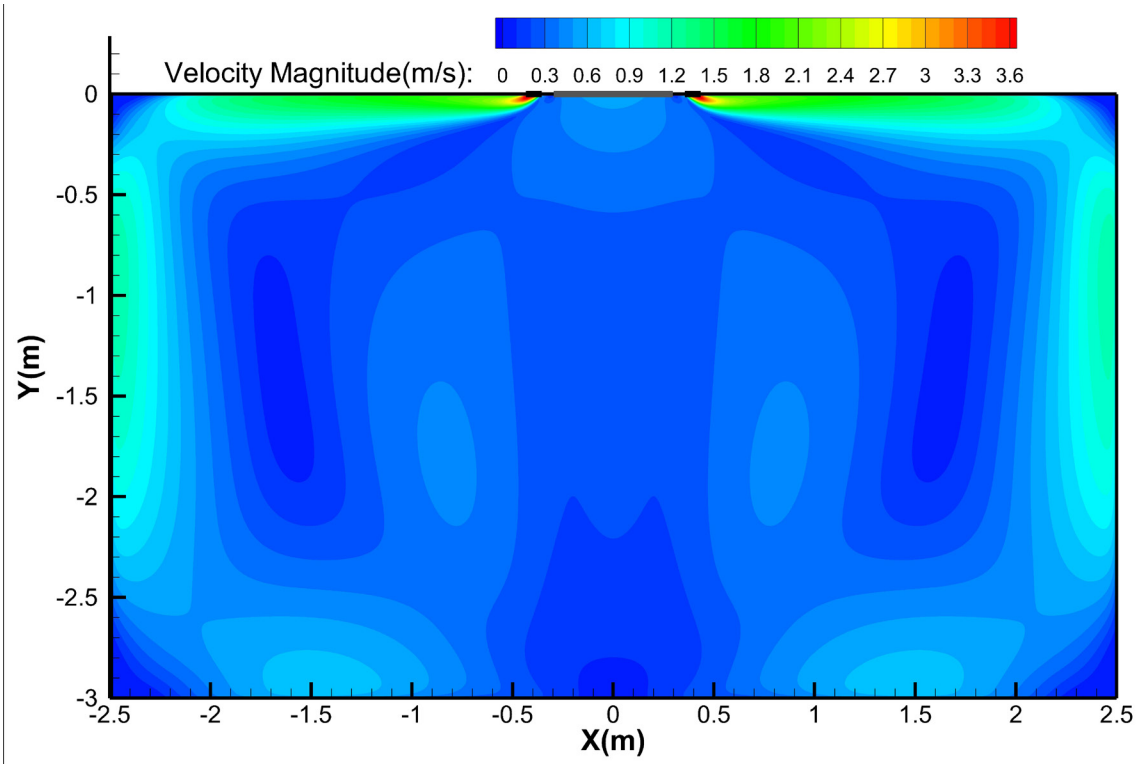

Cooling temperature distributions

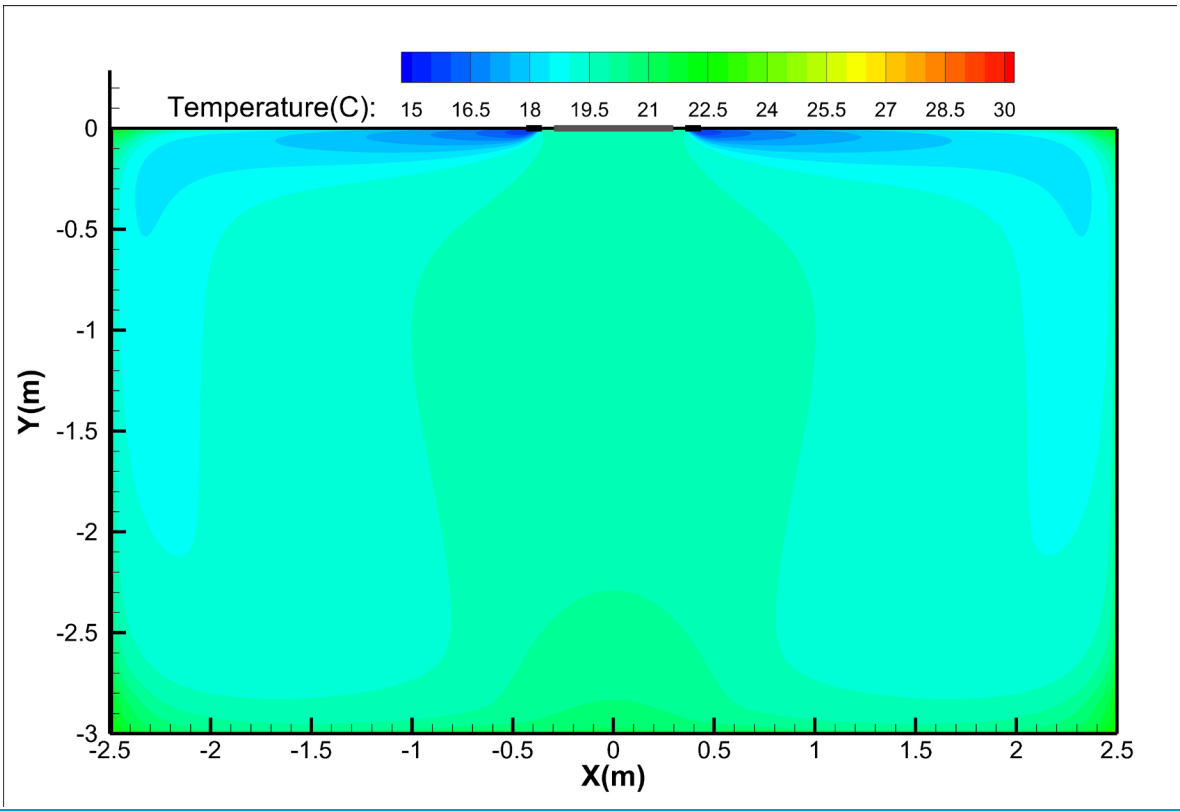

Heating airflow velocity distributions

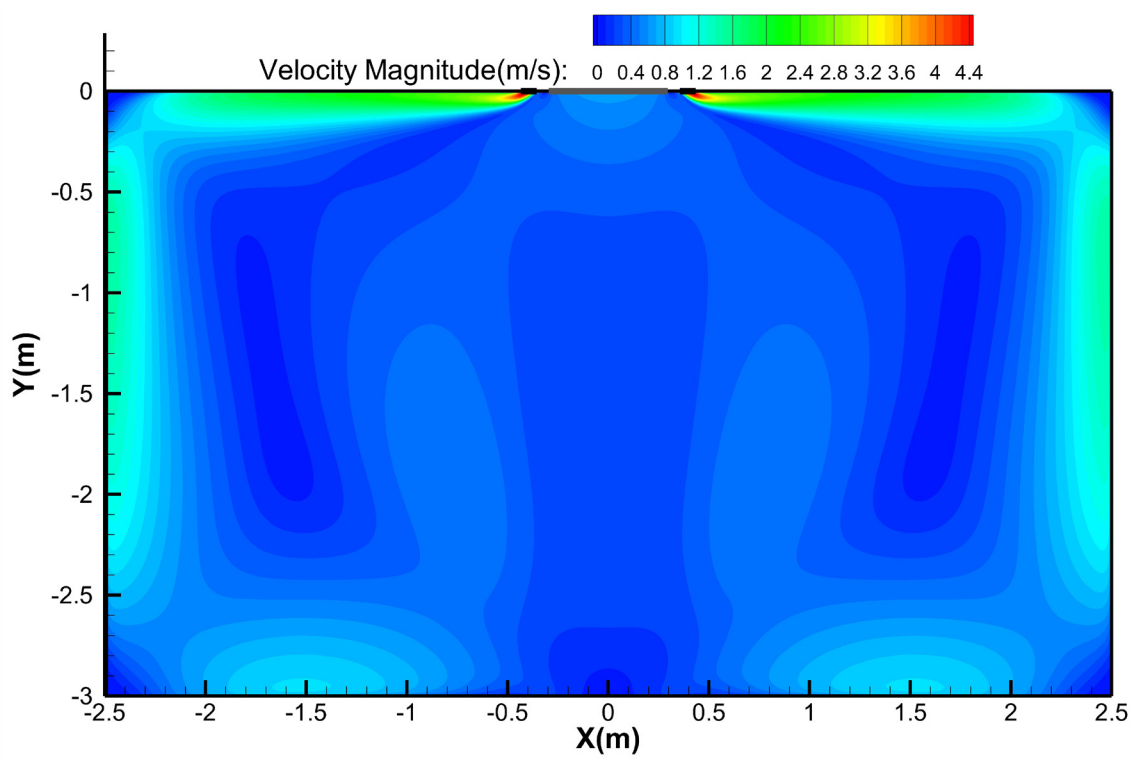

Heating temperature distributions

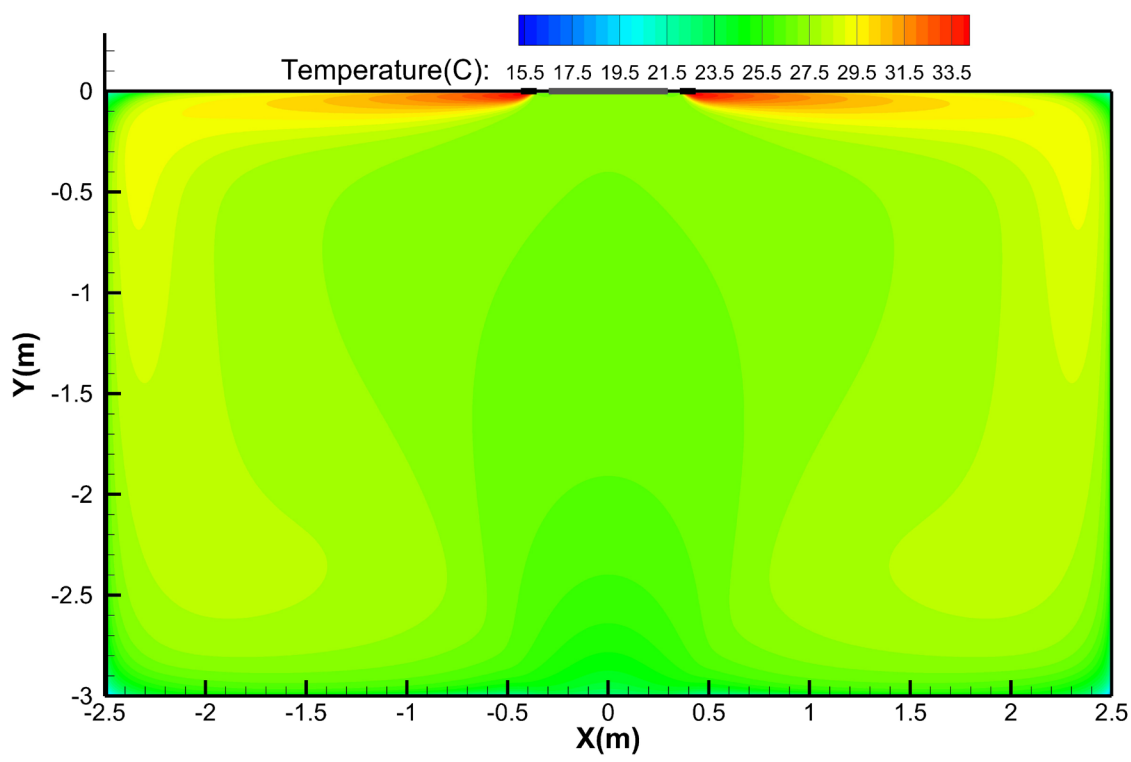

Discharge Angle 60°

Cooling airflow velocity distributions

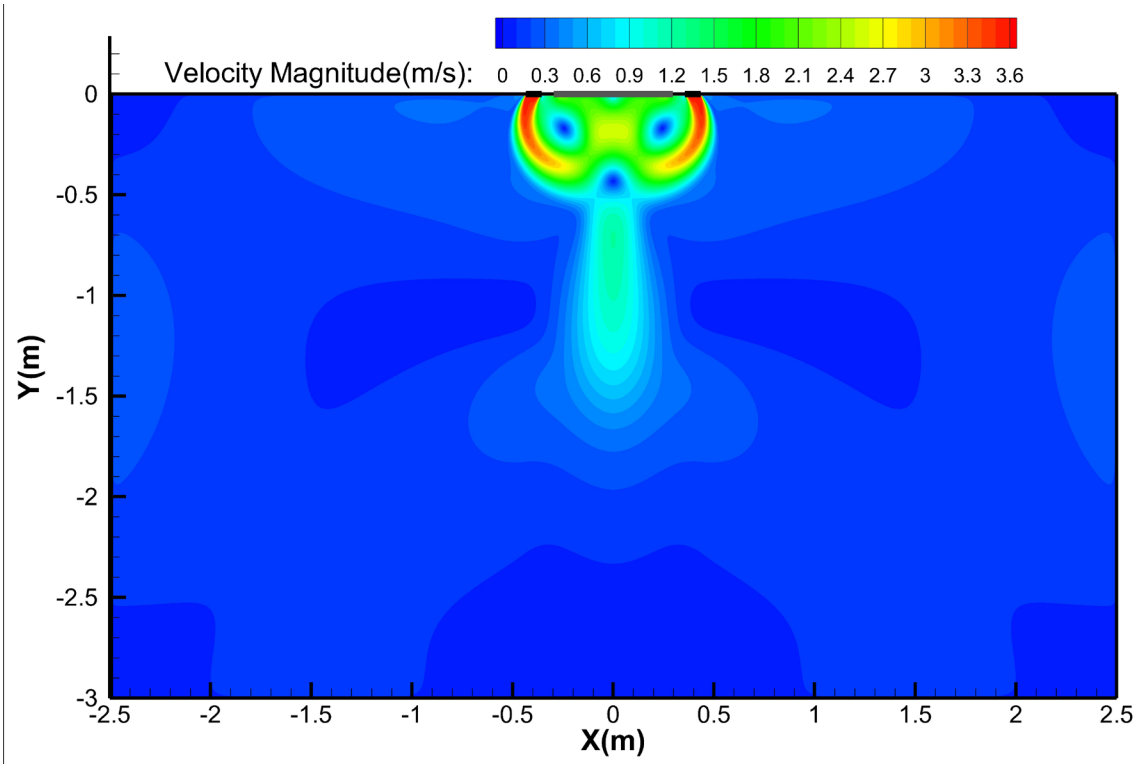

Cooling temperature distributions

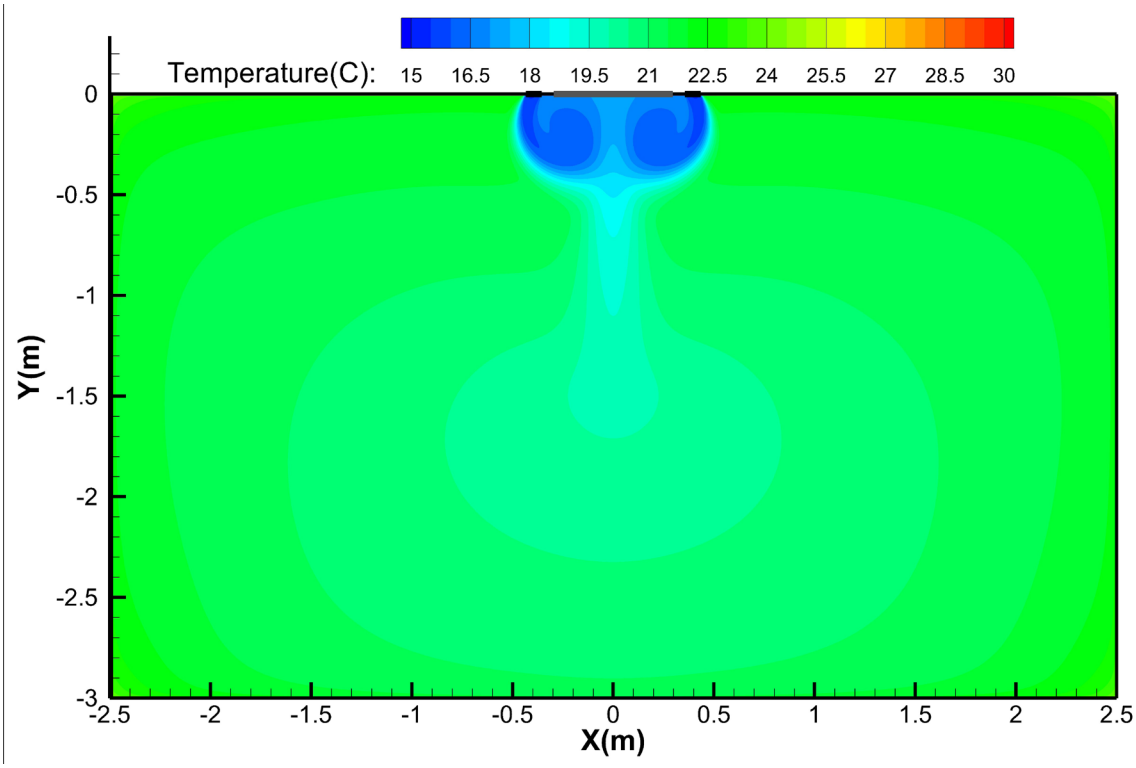

Heating airflow velocity distributions

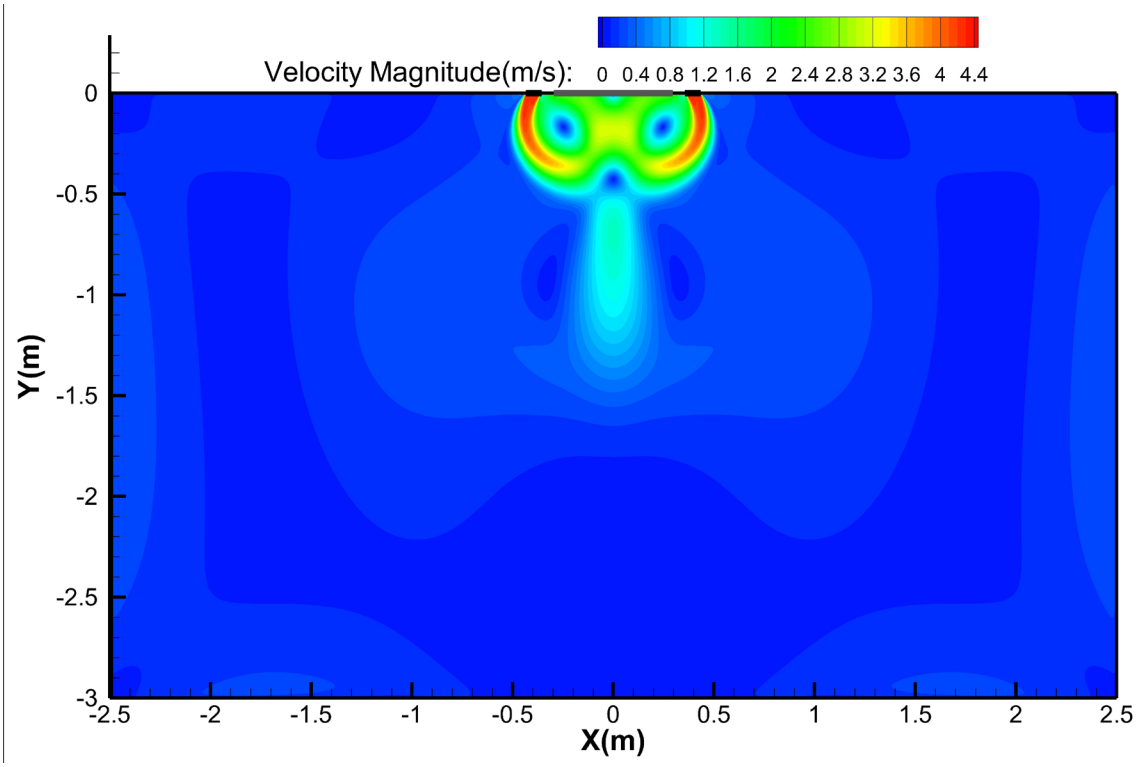

Heating temperature distributions

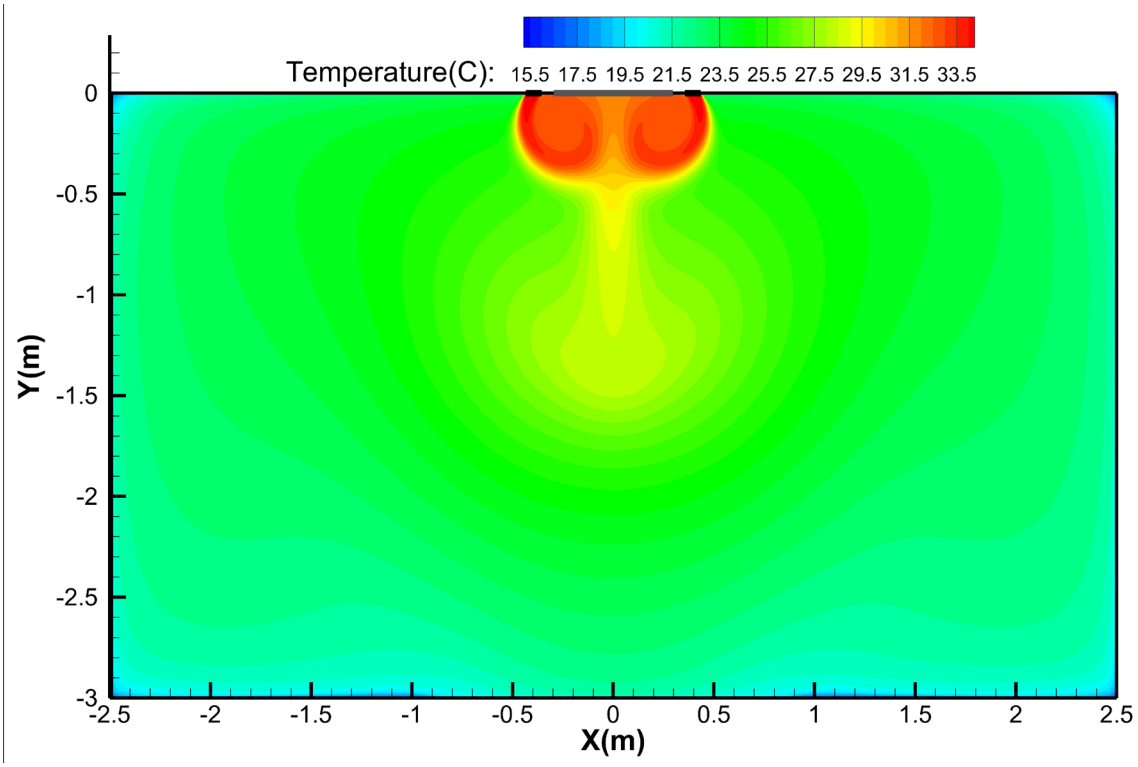

18K

Discharge Angle 30°

Cooling airflow velocity distributions

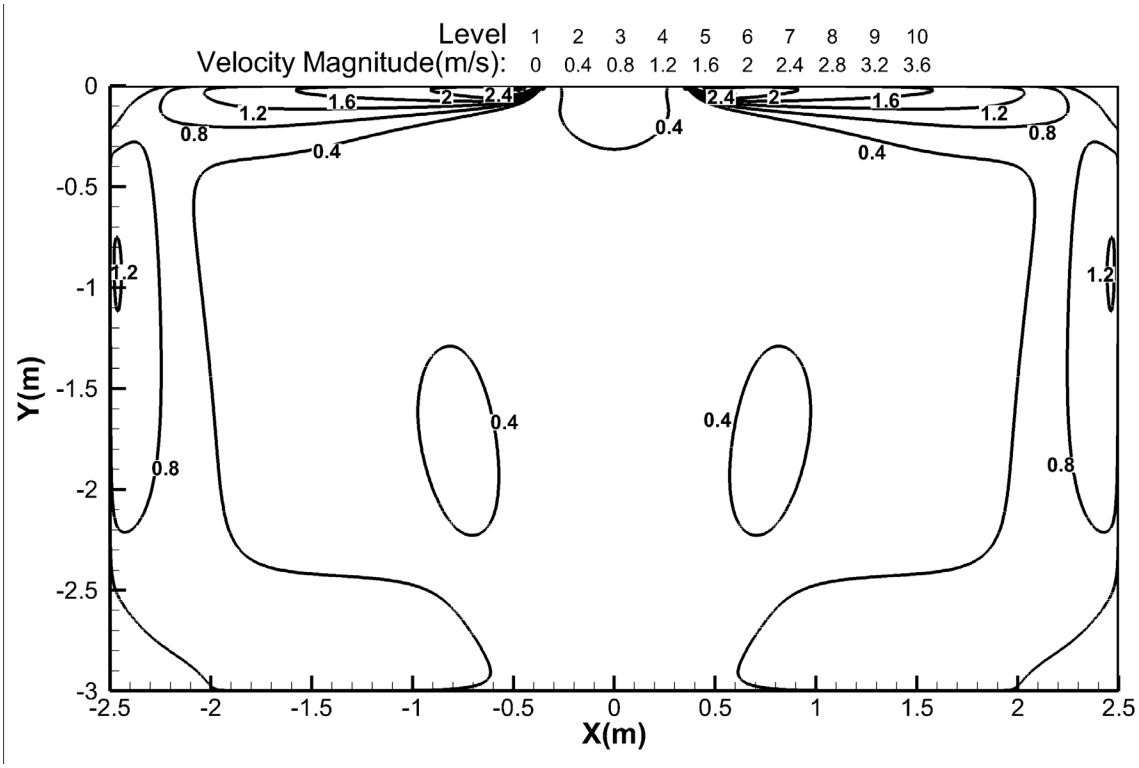

Cooling temperature distributions

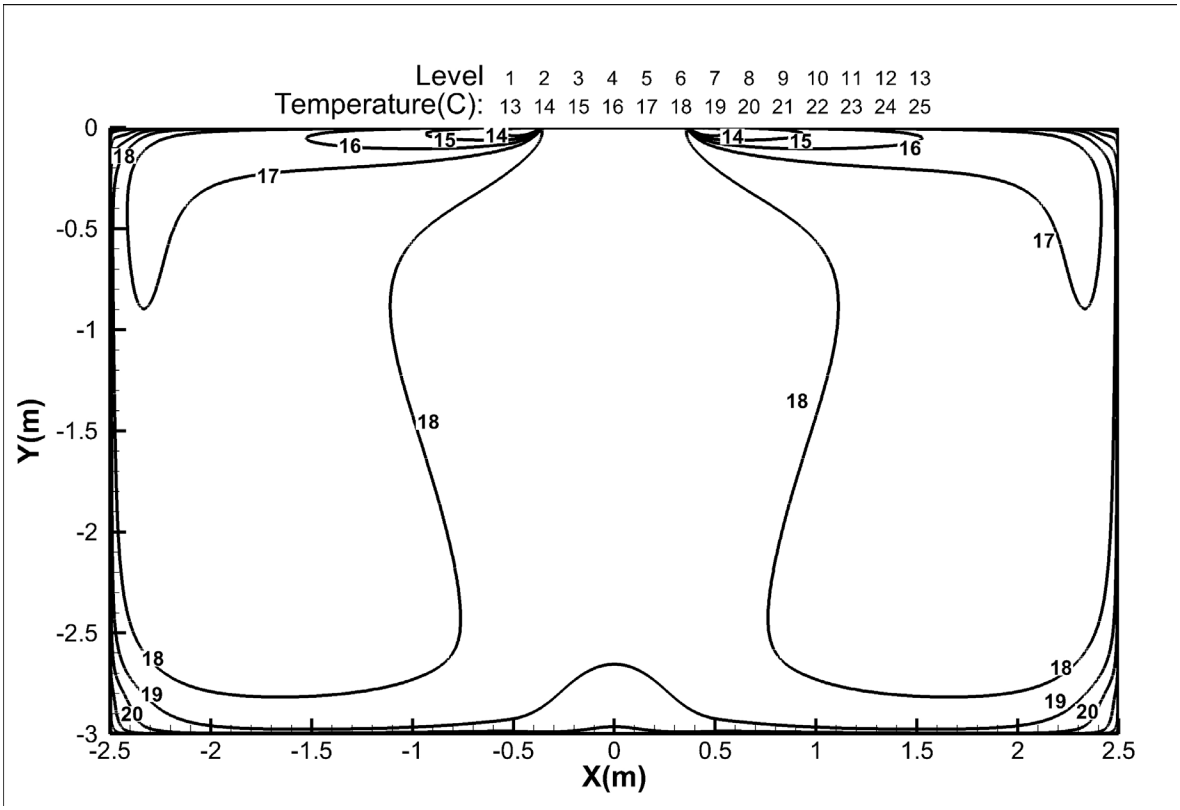

Heating airflow velocity distributions

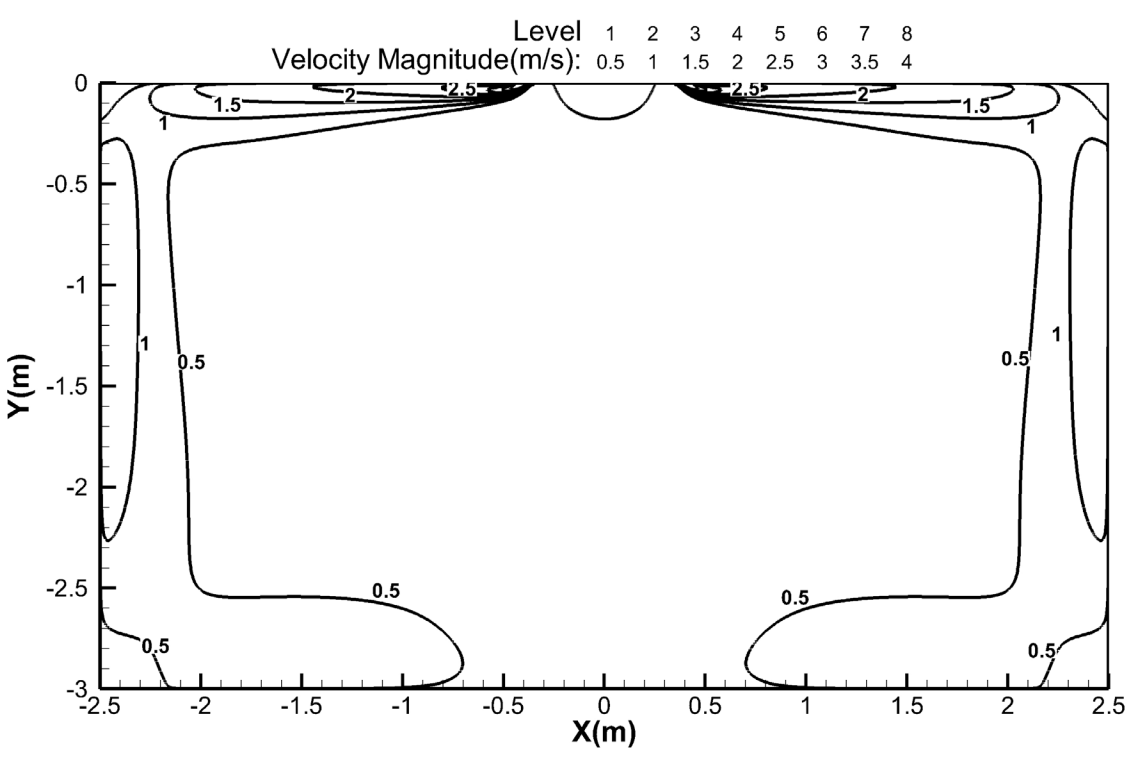

Heating temperature distributions

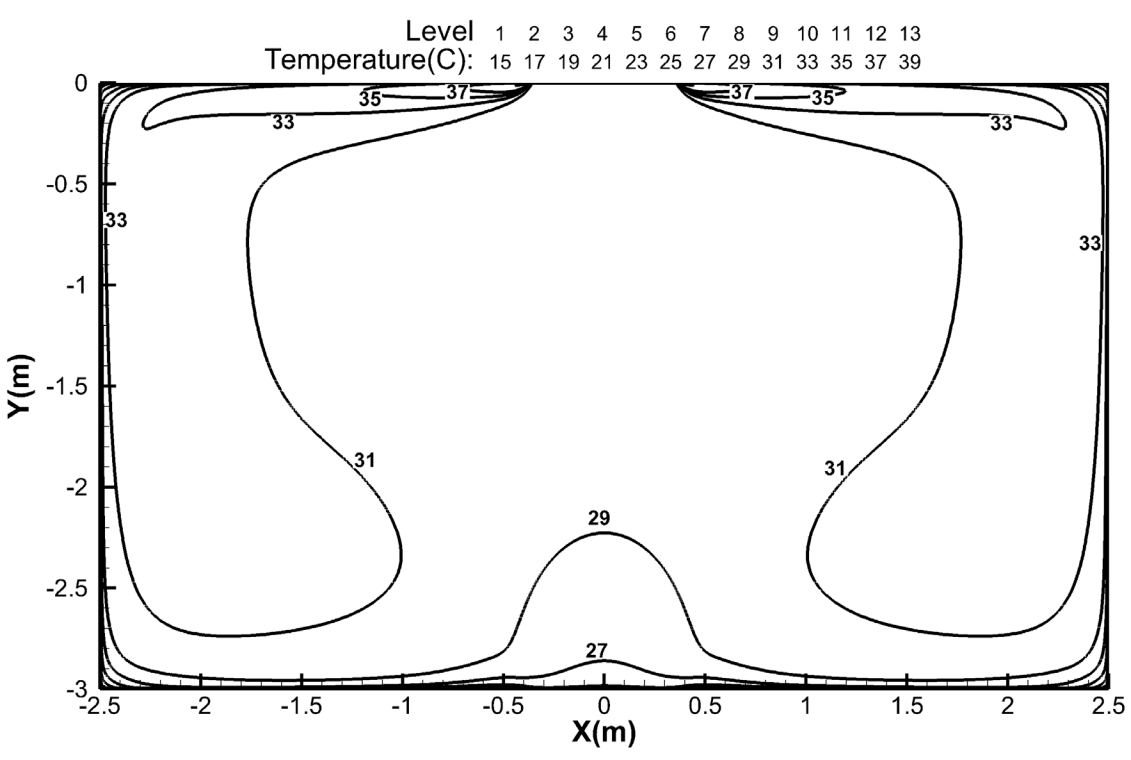

Discharge Angle 60°

Cooling airflow velocity distributions

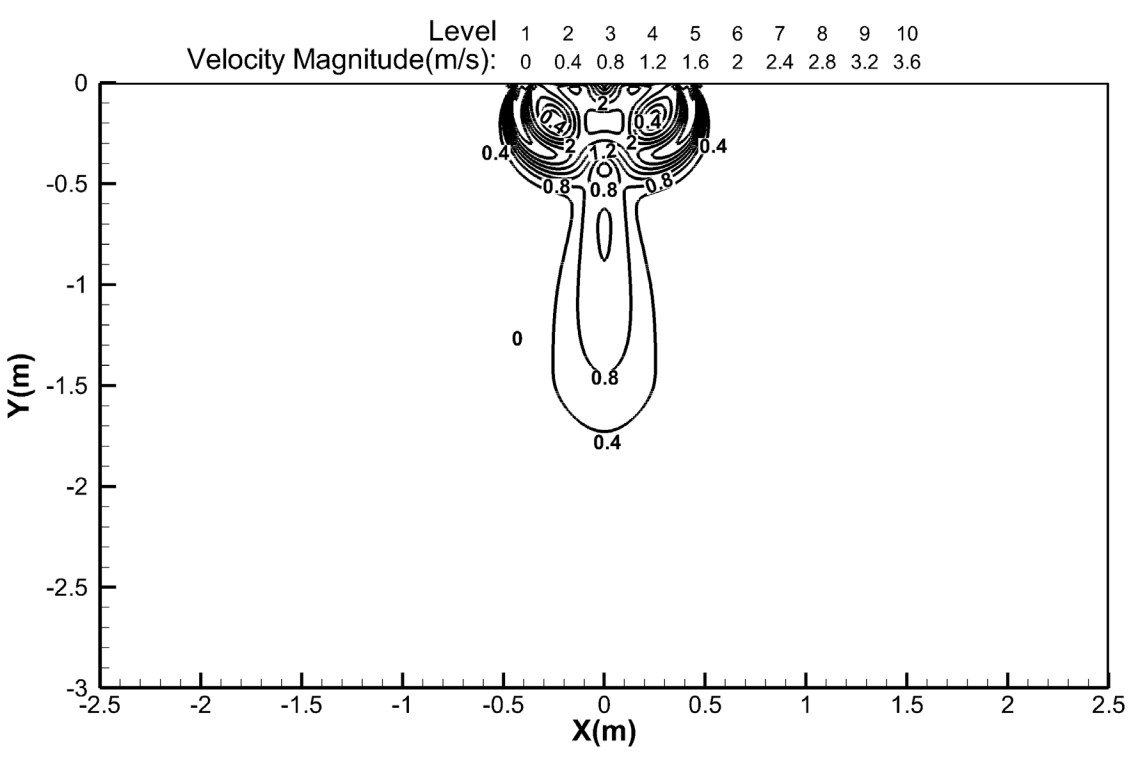

Cooling temperature distributions

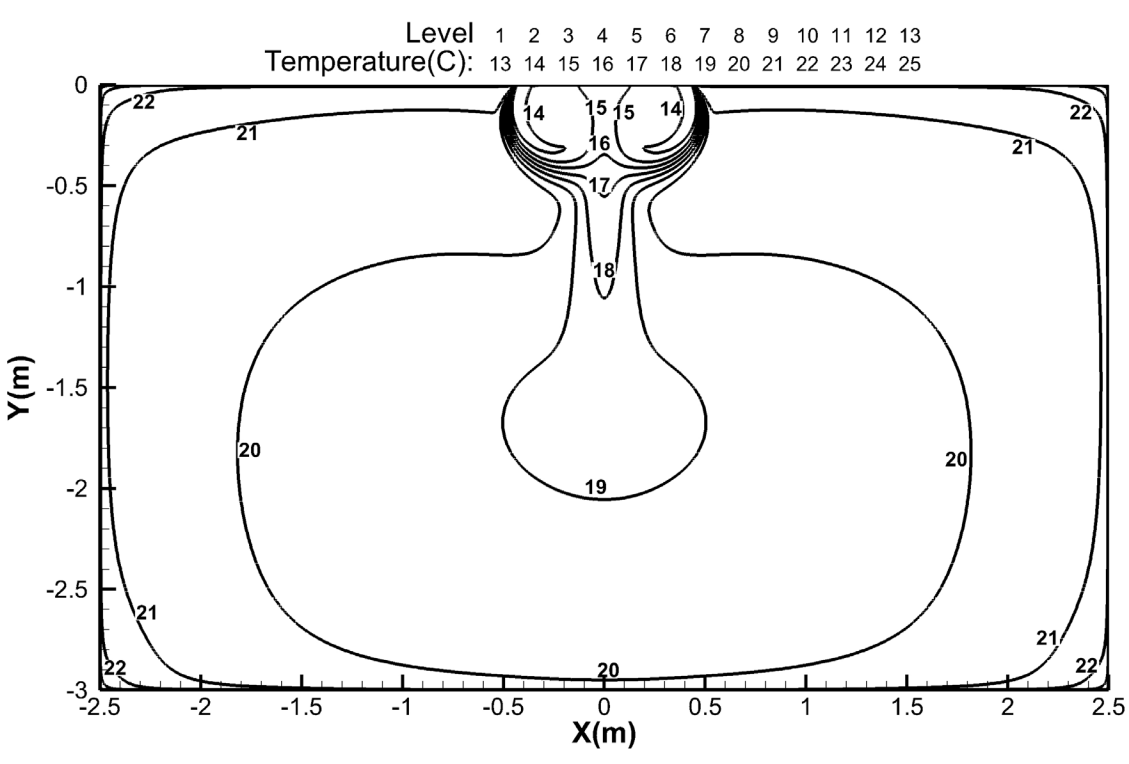

Heating airflow velocity distributions

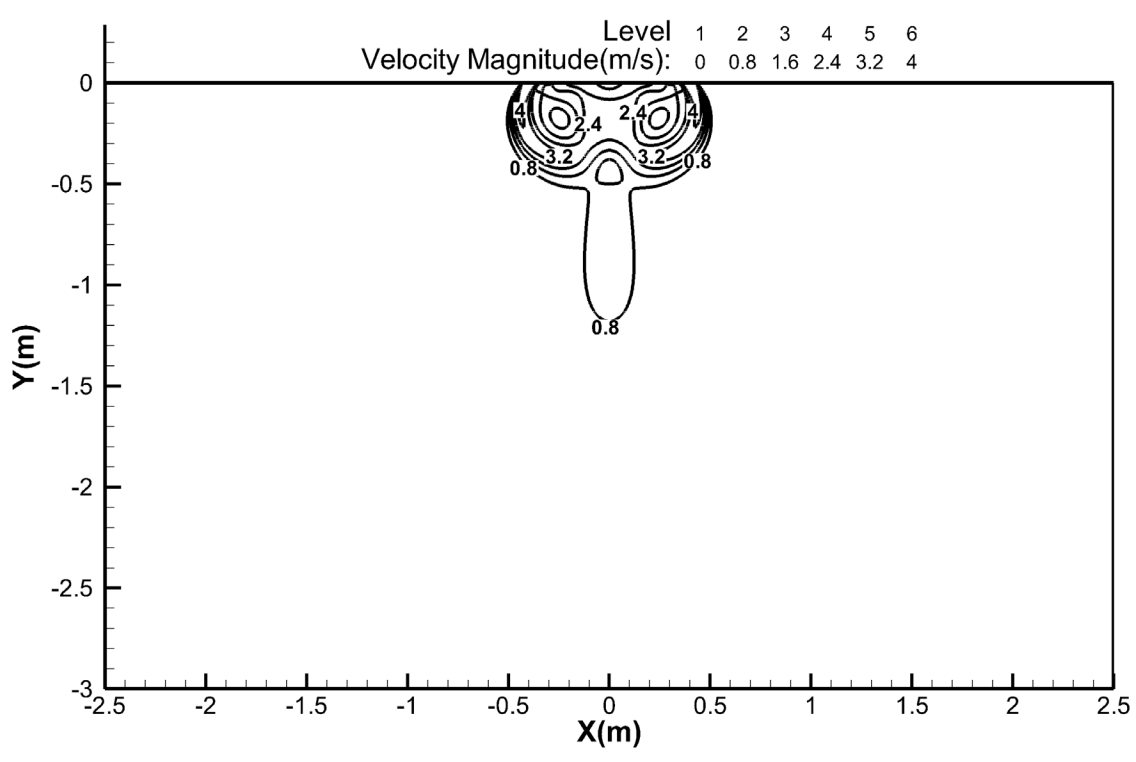

Heating temperature distributions

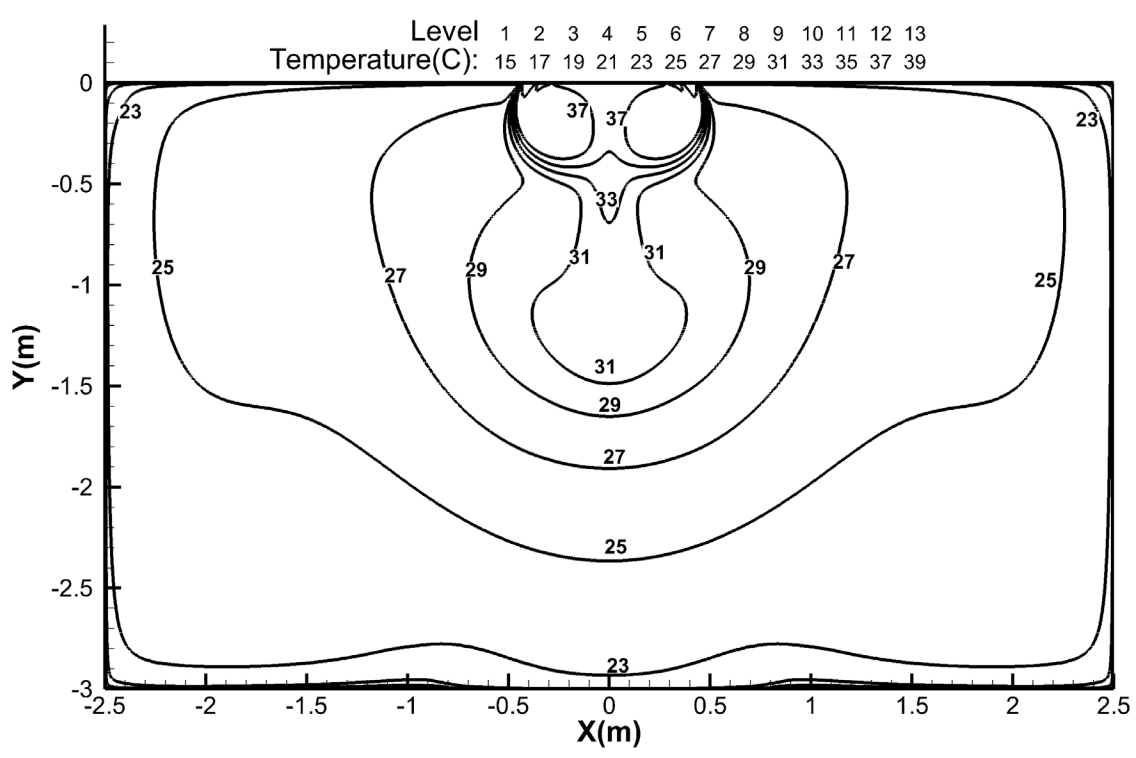

8. Capacity Tables

8.1 Cooling

12k																		
INDOOR AIRFLOW (CMH)	OUTDOOR DB(℃)	ID WB (℃)	16.0				18.0				19.0				22.0			
		ID DB (℃)	23.0	25.0	27.0	29.0	23.0	25.0	27.0	29.0	23.0	25.0	27.0	29.0	23.0	25.0	27.0	29.0
389	-15	TC	3.71	3.72	3.72	3.75	3.90	3.96	3.96	3.96	4.00	4.00	4.00	4.00	4.25	4.25	4.25	4.25
		S/T	0.68	0.74	0.81	0.88	0.55	0.62	0.69	0.75	0.49	0.56	0.63	0.70	0.37	0.42	0.48	0.54
		PI	0.67	0.68	0.68	0.67	0.67	0.67	0.67	0.67	0.67	0.67	0.67	0.67	0.67	0.67	0.67	0.67
	-10	TC	3.68	3.70	3.70	3.73	3.87	3.93	3.93	3.93	3.98	3.98	3.98	3.98	4.23	4.23	4.23	4.23
		S/T	0.68	0.75	0.82	0.88	0.55	0.62	0.69	0.76	0.49	0.56	0.63	0.70	0.37	0.43	0.49	0.54
		PI	0.67	0.67	0.67	0.67	0.67	0.67	0.67	0.67	0.67	0.67	0.67	0.67	0.67	0.67	0.67	0.67
	-5	TC	3.66	3.67	3.67	3.70	3.86	3.92	3.92	3.92	3.96	3.96	3.96	3.96	4.22	4.22	4.22	4.22
		S/T	0.68	0.75	0.82	0.89	0.56	0.63	0.69	0.76	0.50	0.57	0.63	0.70	0.37	0.43	0.49	0.55
		PI	0.67	0.67	0.67	0.67	0.67	0.67	0.67	0.67	0.67	0.67	0.67	0.67	0.67	0.67	0.67	0.67
	0	TC	3.64	3.66	3.66	3.68	3.85	3.91	3.91	3.91	3.95	3.95	3.95	3.95	4.22	4.22	4.22	4.22
		S/T	0.69	0.75	0.82	0.89	0.56	0.63	0.70	0.76	0.50	0.57	0.64	0.71	0.37	0.43	0.49	0.55
		PI	0.67	0.68	0.68	0.67	0.67	0.67	0.67	0.67	0.67	0.67	0.67	0.67	0.68	0.68	0.68	0.68
	5	TC	3.62	3.64	3.64	3.67	3.83	3.89	3.89	3.89	3.94	3.94	3.94	3.94	4.21	4.21	4.21	4.21
		S/T	0.69	0.76	0.83	0.90	0.56	0.63	0.70	0.77	0.50	0.57	0.64	0.71	0.37	0.43	0.49	0.55
		PI	0.68	0.68	0.68	0.68	0.68	0.68	0.68	0.68	0.68	0.68	0.68	0.68	0.68	0.68	0.68	0.68
	10	TC	3.60	3.61	3.61	3.64	3.81	3.87	3.87	3.87	3.92	3.92	3.92	3.92	4.20	4.20	4.20	4.20
		S/T	0.69	0.76	0.83	0.90	0.56	0.63	0.70	0.77	0.50	0.57	0.64	0.71	0.38	0.44	0.50	0.55
		PI	0.69	0.69	0.69	0.69	0.69	0.69	0.69	0.69	0.69	0.69	0.69	0.69	0.69	0.69	0.69	0.69
	15	TC	3.57	3.59	3.59	3.61	3.79	3.85	3.85	3.85	3.90	3.90	3.90	3.90	4.19	4.19	4.19	4.19
		S/T	0.70	0.77	0.84	0.91	0.57	0.64	0.71	0.78	0.51	0.58	0.65	0.72	0.38	0.44	0.50	0.56
		PI	0.71	0.71	0.71	0.71	0.70	0.70	0.70	0.70	0.70	0.70	0.70	0.70	0.70	0.70	0.70	0.70
	20	TC	3.53	3.54	3.54	3.57	3.75	3.75	3.75	3.75	3.86	3.86	3.86	3.86	4.15	4.15	4.15	4.15
		S/T	0.70	0.77	0.84	0.91	0.57	0.64	0.71	0.78	0.51	0.58	0.65	0.72	0.38	0.44	0.50	0.56
		PI	0.73	0.74	0.74	0.73	0.73	0.73	0.73	0.73	0.73	0.73	0.73	0.73	0.73	0.73	0.73	0.73
	25	TC	3.37	3.37	3.37	3.40	3.57	3.57	3.57	3.57	3.69	3.69	3.69	3.69	3.98	3.98	3.98	3.98
		S/T	0.70	0.78	0.86	0.93	0.57	0.65	0.72	0.79	0.51	0.58	0.65	0.72	0.37	0.44	0.50	0.57
		PI	0.80	0.80	0.80	0.80	0.80	0.80	0.80	0.80	0.80	0.80	0.80	0.80	0.80	0.80	0.80	0.80
	30	TC	3.20	3.20	3.20	3.23	3.43	3.43	3.43	3.43	3.52	3.52	3.52	3.52	3.80	3.80	3.80	3.80
		S/T	0.71	0.79	0.87	0.95	0.58	0.65	0.73	0.80	0.51	0.59	0.66	0.74	0.37	0.44	0.51	0.57
		PI	0.88	0.88	0.88	0.88	0.88	0.88	0.88	0.88	0.88	0.88	0.88	0.88	0.89	0.89	0.89	0.89
	35	TC	3.05	3.05	3.08	3.11	3.26	3.26	3.26	3.26	3.34	3.34	3.40	3.34	3.60	3.60	3.60	3.60
		S/T	0.72	0.80	0.89	0.97	0.58	0.66	0.74	0.82	0.51	0.59	0.67	0.75	0.36	0.44	0.51	0.58
		PI	0.96	0.96	0.96	0.96	0.97	0.97	0.97	0.97	0.97	0.97	0.97	0.97	0.97	0.97	0.97	0.97
	40	TC	2.89	2.89	2.92	2.95	3.09	3.09	3.09	3.09	3.18	3.18	3.21	3.18	3.43	3.43	3.43	3.43
		S/T	0.74	0.83	0.92	1.00	0.59	0.67	0.76	0.85	0.52	0.60	0.69	0.77	0.36	0.44	0.52	0.59
		PI	1.07	1.07	1.07	1.07	1.07	1.07	1.07	1.07	1.08	1.08	1.08	1.08	1.08	1.08	1.08	1.08
	46	TC	2.67	2.67	2.70	2.73	2.87	2.87	2.87	2.87	2.96	2.96	2.96	2.96	3.19	3.19	3.19	3.19
		S/T	0.75	0.85	0.94	1.00	0.59	0.68	0.77	0.87	0.52	0.61	0.70	0.79	0.35	0.44	0.52	0.60
		PI	1.19	1.19	1.19	1.19	1.19	1.19	1.19	1.19	1.20	1.20	1.20	1.20	1.21	1.21	1.21	1.21
	50	TC	2.53	2.53	2.55	2.58	2.70	2.70	2.70	2.73	2.79	2.79	2.79	2.79	3.02	3.02	3.02	3.02
		S/T	0.76	0.86	0.96	1.00	0.60	0.70	0.79	0.89	0.52	0.62	0.71	0.81	0.35	0.44	0.52	0.61
		PI	1.29	1.29	1.29	1.29	1.29	1.29	1.29	1.29	1.30	1.30	1.30	1.30	1.31	1.31	1.31	1.31

485	-15	TC	3.78	3.78	3.81	3.84	3.96	3.96	3.96	3.96	4.06	4.06	4.06	4.06	4.31	4.31	4.31	4.31
		S/T	0.70	0.79	0.98	1.00	0.56	0.65	0.73	0.81	0.50	0.58	0.66	0.74	0.35	0.42	0.49	0.57
		PI	0.69	0.69	0.69	0.69	0.69	0.69	0.69	0.69	0.69	0.69	0.69	0.69	0.68	0.68	0.68	0.68
	-10	TC	3.76	3.76	3.79	3.82	3.93	3.93	3.93	3.93	4.04	4.04	4.04	4.04	4.29	4.29	4.29	4.29
		S/T	0.71	0.80	0.99	1.00	0.56	0.65	0.74	0.82	0.50	0.58	0.66	0.75	0.35	0.43	0.49	0.57
		PI	0.68	0.68	0.68	0.68	0.69	0.69	0.69	0.69	0.69	0.69	0.69	0.69	0.68	0.68	0.68	0.68
	-5	TC	3.73	3.73	3.76	3.79	3.92	3.92	3.92	3.92	4.02	4.02	4.02	4.02	4.28	4.28	4.28	4.28
		S/T	0.71	0.80	0.99	1.00	0.57	0.65	0.74	0.82	0.51	0.59	0.66	0.75	0.35	0.43	0.50	0.58
		PI	0.68	0.68	0.68	0.68	0.68	0.68	0.68	0.68	0.69	0.69	0.69	0.69	0.68	0.68	0.68	0.68
	0	TC	3.72	3.72	3.75	3.77	3.91	3.91	3.91	3.91	4.01	4.01	4.01	4.01	4.28	4.28	4.28	4.28
		S/T	0.72	0.80	1.00	1.00	0.57	0.66	0.74	0.82	0.51	0.59	0.67	0.75	0.35	0.43	0.50	0.58
		PI	0.69	0.69	0.69	0.69	0.69	0.69	0.69	0.69	0.69	0.69	0.69	0.69	0.69	0.69	0.69	0.69
	5	TC	3.70	3.70	3.73	3.76	3.89	3.89	3.89	3.89	4.00	4.00	4.00	4.00	4.27	4.27	4.27	4.27
		S/T	0.72	0.81	1.00	1.00	0.57	0.66	0.75	0.83	0.51	0.59	0.67	0.76	0.35	0.43	0.50	0.58
		PI	0.69	0.69	0.69	0.69	0.69	0.69	0.69	0.69	0.70	0.70	0.70	0.70	0.69	0.69	0.69	0.69
	10	TC	3.67	3.67	3.70	3.73	3.87	3.87	3.87	3.87	3.98	3.98	3.98	3.98	4.26	4.26	4.26	4.26
		S/T	0.72	0.81	1.00	1.00	0.57	0.66	0.75	0.83	0.51	0.59	0.67	0.76	0.36	0.44	0.50	0.58
		PI	0.70	0.70	0.70	0.70	0.70	0.70	0.70	0.70	0.71	0.71	0.71	0.71	0.70	0.70	0.70	0.70
	15	TC	3.64	3.64	3.67	3.70	3.85	3.85	3.85	3.85	3.96	3.96	3.96	3.96	4.25	4.25	4.25	4.25
		S/T	0.73	0.82	0.91	0.99	0.58	0.67	0.76	0.84	0.52	0.60	0.68	0.77	0.36	0.44	0.51	0.59
		PI	0.72	0.72	0.72	0.72	0.72	0.72	0.72	0.72	0.72	0.72	0.72	0.72	0.71	0.71	0.71	0.71
	20	TC	3.60	3.60	3.63	3.66	3.81	3.81	3.81	3.81	3.92	3.92	3.92	3.92	4.21	4.21	4.21	4.21
		S/T	0.73	0.82	0.91	0.99	0.58	0.67	0.76	0.84	0.52	0.60	0.68	0.77	0.36	0.44	0.51	0.59
		PI	0.75	0.75	0.75	0.75	0.75	0.75	0.75	0.75	0.75	0.75	0.75	0.75	0.74	0.74	0.74	0.74
	25	TC	3.43	3.43	3.46	3.49	3.63	3.63	3.63	3.63	3.75	3.75	3.75	3.75	4.04	4.04	4.04	4.04
		S/T	0.74	0.83	0.93	1.00	0.59	0.68	0.77	0.86	0.52	0.60	0.69	0.78	0.36	0.44	0.52	0.60
		PI	0.82	0.82	0.82	0.82	0.82	0.82	0.82	0.82	0.82	0.82	0.82	0.82	0.82	0.82	0.82	0.82
	30	TC	3.26	3.26	3.29	3.32	3.49	3.49	3.49	3.49	3.57	3.57	3.57	3.57	3.86	3.86	3.86	3.86
		S/T	0.75	0.85	0.95	1.00	0.59	0.69	0.78	0.87	0.52	0.61	0.70	0.79	0.35	0.44	0.52	0.61
		PI	0.90	0.90	0.90	0.90	0.90	0.90	0.90	0.90	0.90	0.90	0.90	0.90	0.90	0.90	0.90	0.90
	35	TC	3.11	3.11	3.14	3.17	3.32	3.32	3.32	3.34	3.40	3.40	3.46	3.40	3.66	3.66	3.66	3.66
		S/T	0.76	0.87	0.97	1.00	0.60	0.70	0.80	0.89	0.52	0.62	0.71	0.81	0.35	0.44	0.53	0.62
		PI	0.98	0.98	0.98	0.98	0.99	0.99	0.99	0.99	0.99	0.99	0.99	0.99	0.99	0.99	0.99	0.99
	40	TC	2.89	2.91	2.94	2.96	3.08	3.08	3.08	3.11	3.17	3.17	3.20	3.17	3.42	3.42	3.42	3.42
		S/T	0.79	0.90	1.00	1.00	0.61	0.72	0.83	0.93	0.53	0.63	0.74	0.84	0.34	0.44	0.54	0.63
		PI	1.09	1.09	1.09	1.09	1.10	1.10	1.10	1.10	1.10	1.10	1.10	1.10	1.10	1.10	1.10	1.10
	46	TC	2.68	2.71	2.73	2.76	2.85	2.85	2.85	2.88	2.93	2.93	2.93	2.93	3.19	3.19	3.19	3.19
		S/T	0.80	0.92	1.00	1.00	0.62	0.73	0.84	0.95	0.53	0.64	0.75	0.86	0.34	0.44	0.54	0.64
		PI	1.21	1.21	1.21	1.21	1.22	1.22	1.22	1.22	1.22	1.22	1.22	1.22	1.23	1.23	1.23	1.23
	50	TC	2.51	2.53	2.56	2.59	2.68	2.68	2.68	2.71	2.76	2.76	2.76	2.79	3.02	3.02	3.02	3.02
		S/T	0.82	0.95	1.00	1.00	0.63	0.75	0.87	0.98	0.54	0.66	0.77	0.89	0.34	0.44	0.55	0.91
		PI	1.31	1.31	1.31	1.31	1.32	1.32	1.32	1.32	1.32	1.32	1.32	1.32	1.33	1.33	1.33	1.33
569	-15	TC	3.84	3.84	3.87	3.90	4.02	4.02	4.02	4.05	4.12	4.12	4.12	4.12	4.40	4.40	4.40	4.40
		S/T	0.73	0.84	1.00	1.00	0.58	0.68	0.77	0.98	0.50	0.60	0.70	0.78	0.34	0.42	0.51	0.60
		PI	0.70	0.70	0.70	0.70	0.70	0.70	0.70	0.70	0.70	0.70	0.70	0.70	0.70	0.70	0.70	0.70
	-10	TC	3.82	3.82	3.85	3.88	3.99	3.99	3.99	4.02	4.10	4.10	4.10	4.10	4.38	4.38	4.38	4.38
		S/T	0.74	0.84	1.00	1.00	0.58	0.68	0.78	0.98	0.50	0.60	0.70	0.79	0.34	0.43	0.51	0.60
		PI	0.70	0.70	0.70	0.70	0.69	0.69	0.69	0.69	0.70	0.70	0.70	0.70	0.70	0.70	0.70	0.70
	-5	TC	3.79	3.79	3.82	3.85	3.98	3.98	3.98	4.01	4.08	4.08	4.08	4.08	4.37	4.37	4.37	4.37
		S/T	0.74	0.85	1.00	1.00	0.59	0.68	0.78	0.99	0.51	0.60	0.70	0.79	0.34	0.43	0.52	0.60
		PI	0.70	0.70	0.70	0.70	0.69	0.69	0.69	0.69	0.70	0.70	0.70	0.70	0.70	0.70	0.70	0.70
	0	TC	3.77	3.77	3.80	3.83	3.96	3.96	3.96	3.99	4.07	4.07	4.07	4.07	4.37	4.37	4.37	4.37
		S/T	0.74	0.85	1.00	1.00	0.59	0.69	0.78	0.99	0.51	0.61	0.71	0.79	0.34	0.43	0.52	0.61
		PI	0.70	0.70	0.70	0.70	0.70	0.70	0.70	0.70	0.70	0.70	0.70	0.70	0.70	0.70	0.70	0.70
	5	TC	3.76	3.76	3.79	3.82	3.95	3.95	3.95	3.98	4.06	4.06	4.06	4.06	4.36	4.36	4.36	4.36
		S/T	0.75	0.86	1.00	1.00	0.59	0.69	0.79	1.00	0.51	0.61	0.71	0.80	0.34	0.43	0.52	0.61
		PI	0.71	0.71	0.71	0.71	0.70	0.70	0.70	0.70	0.70	0.70	0.70	0.70	0.71	0.71	0.71	0.71
	10	TC	3.73	3.73	3.76	3.79	3.93	3.93	3.93	3.96	4.04	4.04	4.04	4.04	4.35	4.35	4.35	4.35
		S/T	0.75	0.86	1.00	1.00	0.59	0.69	0.79	1.00	0.51	0.61	0.71	0.80	0.35	0.44	0.52	0.61
		PI	0.72	0.72	0.72	0.72	0.71	0.71	0.71	0.71	0.71	0.71	0.71	0.71	0.72	0.72	0.72	0.72
	15	TC	3.70	3.70	3.73	3.76	3.90	3.90	3.90	3.93	4.02	4.02	4.02	4.02	4.33	4.33	4.33	4.33
		S/T	0.76	0.87	0.97	1.00	0.60	0.70	0.80	0.89	0.52	0.62	0.72	0.81	0.35	0.44	0.53	0.62
		PI	0.74	0.74	0.74	0.74	0.73	0.73	0.73	0.73	0.73	0.73	0.73	0.73	0.73	0.73	0.73	0.73
	20	TC	3.66	3.66	3.69	3.72	3.86	3.86	3.86	3.89	3.98	3.98	3.98	3.98	4.30	4.30	4.30	4.30
		S/T	0.76	0.87	0.97	1.00	0.60	0.70	0.80	0.89	0.52	0.62	0.72	0.81	0.35	0.44	0.53	0.62
		PI	0.76	0.76	0.76	0.76	0.76	0.76	0.76	0.76	0.76	0.76	0.76	0.76	0.76	0.76	0.76	0.76
	25	TC	3.49	3.49	3.52	3.55	3.69	3.69	3.69	3.72	3.81	3.81	3.81	3.81	4.09	4.09	4.09	4.09
		S/T	0.77	0.88	0.99	1.00	0.61	0.71	0.81	0.91	0.53	0.63	0.73	0.83	0.35	0.44	0.53	0.63
		PI	0.83	0.83	0.83	0.83	0.83	0.83	0.83	0.83	0.83	0.83	0.83	0.83	0.83	0.83	0.83	0.83
	30	TC	3.32	3.34	3.37	3.40	3.55	3.55	3.55	3.57	3.63	3.63	3.63	3.63	3.92	3.92	3.92	3.92
		S/T	0.79	0.90	1.00	1.00	0.61	0.72	0.83	0.93	0.53	0.64	0.74	0.85	0.34	0.44	0.54	0.64
		PI	0.92	0.92	0.92	0.92	0.92	0.92	0.92	0.92	0.92	0.92	0.92	0.92	0.92	0.92	0.92	0.92
	35	TC	3.14	3.17	3.20	3.23	3.37	3.37	3.37	3.40	3.46	3.46	**3.52**	3.46	3.75	3.75	3.75	3.75
		S/T	0.80	0.92	1.00	1.00	0.62	0.73	0.85	0.96	0.53	0.64	**0.75**	0.87	0.34	0.44	0.54	0.65
		PI	1.00	1.00	1.00	1.00	1.01	1.01	1.01	1.01	1.01	1.01	**1.01**	1.01	1.02	1.02	1.02	1.02
	40	TC	2.92	2.95	2.98	3.01	3.14	3.14	3.15	3.18	3.22	3.22	3.25	3.24	3.50	3.50	3.50	3.50
		S/T	0.83	0.96	1.00	1.00	0.64	0.76	0.88	1.00	0.54	0.66	0.78	0.90	0.33	0.45	0.56	0.90
		PI	1.11	1.11	1.11	1.11	1.12	1.12	1.12	1.12	1.12	1.12	1.12	1.12	1.13	1.13	1.13	1.13
	46	TC	2.71	2.73	2.76	2.79	2.90	2.90	2.93	2.96	2.99	2.99	2.99	3.02	3.25	3.25	3.25	3.25
		S/T	0.85	0.99	1.00	1.00	0.64	0.77	0.90	1.00	0.55	0.67	0.80	0.92	0.33	0.45	0.56	0.92
		PI	1.24	1.24	1.24	1.24	1.24	1.24	1.24	1.24	1.24	1.24	1.24	1.24	1.25	1.25	1.25	1.25
	50	TC	2.56	2.59	2.62	2.65	2.73	2.73	2.76	2.79	2.82	2.82	2.82	2.85	3.05	3.05	3.05	3.05
		S/T	0.87	1.00	1.00	1.00	0.66	0.79	0.93	1.00	0.56	0.69	0.82	0.95	0.33	0.45	0.58	0.97
		PI	1.34	1.34	1.34	1.34	1.35	1.35	1.35	1.35	1.35	1.35	1.35	1.35	1.36	1.36	1.36	1.36

TC:Total Cooling Capacity (kW)

S/T:Sensible Cooling Capacity Ratio

PI:Power Input(kW)

Note: The table shows the case where the operation frequency of a compressor is fixed.

18k																			
INDOOR AIRFLOW (CMH)	OUTDOOR DB(℃)	ID WB (℃)	16.0				18.0				19.0				22.0				
		ID DB (℃)	23.0	25.0	27.0	29.0	23.0	25.0	27.0	29.0	23.0	25.0	27.0	29.0	23.0	25.0	27.0	29.0	
479	-15	TC	5.50	5.50	5.50	5.50	5.78	5.90	5.90	5.90	5.93	5.93	5.93	5.93	6.28	6.28	6.28	6.28	
		S/T	0.66	0.71	0.77	0.83	0.55	0.60	0.66	0.71	0.50	0.55	0.61	0.66	0.39	0.43	0.48	0.53	
		PI	1.09	1.08	1.08	1.09	1.08	1.08	1.08	1.08	1.09	1.09	1.09	1.09	1.08	1.08	1.08	1.08	
	-10	TC	5.46	5.47	5.47	5.47	5.75	5.87	5.87	5.87	5.90	5.90	5.90	5.90	6.25	6.25	6.25	6.25	
		S/T	0.66	0.72	0.78	0.83	0.55	0.61	0.66	0.72	0.50	0.55	0.61	0.66	0.39	0.44	0.49	0.53	
		PI	1.08	1.08	1.08	1.08	1.08	1.08	1.08	1.08	1.08	1.08	1.08	1.08	1.08	1.08	1.08	1.08	
	-5	TC	5.43	5.43	5.43	5.43	5.73	5.85	5.85	5.85	5.88	5.88	5.88	5.88	6.24	6.24	6.24	6.24	
		S/T	0.66	0.72	0.78	0.84	0.56	0.61	0.66	0.72	0.51	0.56	0.61	0.66	0.39	0.44	0.49	0.54	
		PI	1.08	1.08	1.08	1.08	1.08	1.08	1.08	1.08	1.08	1.08	1.08	1.08	1.08	1.08	1.08	1.08	
	0	TC	5.40	5.41	5.41	5.41	5.71	5.83	5.83	5.83	5.87	5.87	5.87	5.87	6.23	6.23	6.23	6.23	
		S/T	0.67	0.73	0.78	0.84	0.56	0.61	0.67	0.73	0.51	0.56	0.62	0.67	0.39	0.44	0.49	0.54	
		PI	1.08	1.08	1.08	1.08	1.08	1.08	1.08	1.08	1.09	1.09	1.09	1.09	1.09	1.09	1.09	1.09	
	5	TC	5.38	5.38	5.38	5.38	5.68	5.80	5.80	5.80	5.85	5.85	5.85	5.85	6.23	6.23	6.23	6.23	
		S/T	0.67	0.73	0.79	0.85	0.56	0.62	0.67	0.73	0.51	0.56	0.62	0.67	0.39	0.44	0.49	0.54	
		PI	1.09	1.09	1.09	1.09	1.09	1.09	1.09	1.09	1.10	1.10	1.10	1.10	1.09	1.09	1.09	1.09	
	10	TC	5.34	5.35	5.35	5.35	5.66	5.78	5.78	5.78	5.82	5.82	5.82	5.82	6.21	6.21	6.21	6.21	
		S/T	0.67	0.73	0.79	0.85	0.56	0.62	0.67	0.73	0.51	0.56	0.62	0.67	0.40	0.45	0.50	0.54	
		PI	1.11	1.11	1.11	1.11	1.11	1.11	1.11	1.11	1.11	1.11	1.11	1.11	1.11	1.11	1.11	1.11	
	15	TC	5.30	5.30	5.30	5.30	5.62	5.74	5.74	5.74	5.79	5.79	5.79	5.79	6.19	6.19	6.19	6.19	
		S/T	0.68	0.74	0.80	0.86	0.57	0.62	0.68	0.74	0.52	0.57	0.63	0.68	0.40	0.45	0.50	0.55	
		PI	1.14	1.14	1.14	1.14	1.14	1.14	1.14	1.14	1.14	1.14	1.14	1.14	1.13	1.13	1.13	1.13	
	20	TC	5.24	5.24	5.24	5.24	5.56	5.56	5.56	5.56	5.73	5.73	5.73	5.73	6.13	6.13	6.13	6.13	
		S/T	0.68	0.74	0.80	0.86	0.57	0.63	0.68	0.74	0.52	0.57	0.63	0.68	0.40	0.45	0.50	0.55	
		PI	1.18	1.18	1.18	1.18	1.18	1.18	1.18	1.18	1.18	1.18	1.18	1.18	1.17	1.17	1.17	1.17	
	25	TC	4.99	4.99	4.99	4.99	5.30	5.30	5.30	5.30	5.47	5.47	5.47	5.47	5.87	5.87	5.87	5.87	
		S/T	0.68	0.75	0.81	0.87	0.57	0.63	0.69	0.75	0.51	0.57	0.63	0.69	0.39	0.44	0.50	0.55	
		PI	1.30	1.30	1.30	1.30	1.30	1.30	1.30	1.30	1.30	1.30	1.30	1.30	1.30	1.30	1.30	1.30	
	30	TC	4.76	4.76	4.76	4.81	5.07	5.07	5.07	5.07	5.22	5.22	5.22	5.22	5.62	5.62	5.62	5.62	
		S/T	0.69	0.75	0.82	0.88	0.57	0.63	0.69	0.76	0.51	0.57	0.64	0.70	0.39	0.44	0.50	0.56	
		PI	1.42	1.42	1.42	1.42	1.43	1.43	1.43	1.43	1.43	1.43	1.43	1.43	1.43	1.43	1.43	1.43	
	35	TC	4.53	4.53	4.53	4.59	4.81	4.81	4.81	4.81	4.96	4.96	5.04	4.96	5.36	5.36	5.36	5.36	
		S/T	0.69	0.76	0.83	0.90	0.57	0.64	0.70	0.77	0.51	0.58	0.64	0.71	0.38	0.44	0.50	0.56	
		PI	1.56	1.56	1.56	1.56	1.56	1.56	1.56	1.56	1.57	1.57	1.57	1.57	1.58	1.58	1.58	1.58	
	40	TC	4.28	4.28	4.28	4.32	4.55	4.55	4.55	4.55	4.70	4.70	4.74	4.70	5.07	5.07	5.07	5.07	
		S/T	0.70	0.78	0.86	0.93	0.57	0.65	0.72	0.79	0.51	0.58	0.65	0.72	0.37	0.44	0.50	0.57	
		PI	1.72	1.72	1.72	1.72	1.72	1.72	1.72	1.72	1.73	1.73	1.73	1.73	1.74	1.74	1.74	1.74	
	46	TC	3.97	3.97	3.97	4.00	4.22	4.22	4.22	4.22	4.37	4.37	4.37	4.37	4.71	4.71	4.71	4.71	
		S/T	0.71	0.79	0.87	0.95	0.58	0.65	0.73	0.80	0.51	0.59	0.66	0.73	0.37	0.44	0.51	0.57	
		PI	1.91	1.91	1.91	1.91	1.92	1.92	1.92	1.92	1.92	1.92	1.92	1.92	1.94	1.94	1.94	1.94	
	50	TC	3.71	3.71	3.74	3.77	3.97	3.97	3.97	3.97	4.11	4.11	4.11	4.11	4.45	4.45	4.45	4.45	
		S/T	0.72	0.81	0.89	0.97	0.58	0.66	0.74	0.82	0.51	0.59	0.67	0.75	0.36	0.44	0.51	0.58	
		PI	2.07	2.07	2.07	2.07	2.08	2.08	2.08	2.08	2.09	2.09	2.09	2.09	2.10	2.10	2.10	2.10	
584	-15	TC	5.62	5.62	5.62	5.68	5.90	5.90	5.90	5.90	6.06	6.06	6.06	6.06	6.43	6.43	6.43	6.43	
		S/T	0.67	0.74	0.98	1.00	0.55	0.62	0.69	0.75	0.49	0.56	0.63	0.69	0.37	0.42	0.48	0.54	
		PI	1.11	1.11	1.11	1.11	1.10	1.10	1.10	1.10	1.10	1.10	1.10	1.10	1.10	1.10	1.10	1.10	
	-10	TC	5.59	5.59	5.59	5.65	5.87	5.87	5.87	5.87	6.03	6.03	6.03	6.03	6.40	6.40	6.40	6.40	
		S/T	0.67	0.75	0.99	1.00	0.55	0.62	0.69	0.76	0.49	0.56	0.63	0.69	0.37	0.43	0.49	0.54	
		PI	1.10	1.10	1.10	1.10	1.10	1.10	1.10	1.10	1.10	1.10	1.10	1.10	1.11	1.11	1.11	1.11	
	-5	TC	5.56	5.56	5.56	5.62	5.85	5.85	5.85	5.85	6.00	6.00	6.00	6.00	6.39	6.39	6.39	6.39	
		S/T	0.67	0.75	0.99	1.00	0.56	0.62	0.69	0.76	0.50	0.57	0.63	0.69	0.37	0.43	0.49	0.55	
		PI	1.10	1.10	1.10	1.10	1.10	1.10	1.10	1.10	1.10	1.10	1.10	1.10	1.11	1.11	1.11	1.11	
	0	TC	5.53	5.53	5.53	5.59	5.83	5.83	5.83	5.83	5.99	5.99	5.99	5.99	6.38	6.38	6.38	6.38	
		S/T	0.68	0.75	1.00	1.00	0.56	0.63	0.70	0.76	0.50	0.57	0.64	0.70	0.37	0.43	0.49	0.55	
		PI	1.11	1.11	1.11	1.11	1.10	1.10	1.10	1.10	1.10	1.10	1.10	1.10	1.11	1.11	1.11	1.11	
	5	TC	5.50	5.50	5.50	5.56	5.80	5.80	5.80	5.80	5.97	5.97	5.97	5.97	6.38	6.38	6.38	6.38	
		S/T	0.68	0.76	1.00	1.00	0.56	0.63	0.70	0.77	0.50	0.57	0.64	0.70	0.37	0.43	0.49	0.55	
		PI	1.12	1.12	1.12	1.12	1.11	1.11	1.11	1.11	1.11	1.11	1.11	1.11	1.12	1.12	1.12	1.12	
	10	TC	5.47	5.47	5.47	5.53	5.78	5.78	5.78	5.78	5.94	5.94	5.94	5.94	6.36	6.36	6.36	6.36	
		S/T	0.68	0.76	1.00	1.00	0.56	0.63	0.70	0.77	0.50	0.57	0.64	0.70	0.38	0.44	0.50	0.55	
		PI	1.13	1.13	1.13	1.13	1.13	1.13	1.13	1.13	1.13	1.13	1.13	1.13	1.13	1.13	1.13	1.13	
	15	TC	5.42	5.42	5.42	5.48	5.74	5.74	5.74	5.74	5.91	5.91	5.91	5.91	6.33	6.33	6.33	6.33	
		S/T	0.69	0.77	0.84	0.91	0.57	0.64	0.71	0.78	0.51	0.58	0.65	0.71	0.38	0.44	0.50	0.56	
		PI	1.16	1.16	1.16	1.16	1.15	1.15	1.15	1.15	1.15	1.15	1.15	1.15	1.16	1.16	1.16	1.16	
	20	TC	5.36	5.36	5.36	5.42	5.68	5.68	5.68	5.68	5.85	5.85	5.85	5.85	6.28	6.28	6.28	6.28	
		S/T	0.69	0.77	0.84	0.91	0.57	0.64	0.71	0.78	0.51	0.58	0.65	0.71	0.38	0.44	0.50	0.56	
		PI	1.20	1.20	1.20	1.20	1.19	1.19	1.19	1.19	1.19	1.19	1.19	1.19	1.19	1.19	1.19	1.19	
	25	TC	5.10	5.10	5.10	5.16	5.42	5.42	5.42	5.42	5.59	5.59	5.59	5.59	6.02	6.02	6.02	6.02	
		S/T	0.70	0.78	0.85	0.93	0.57	0.64	0.72	0.79	0.51	0.58	0.65	0.72	0.37	0.44	0.50	0.57	
		PI	1.32	1.32	1.32	1.32	1.32	1.32	1.32	1.32	1.32	1.32	1.32	1.32	1.32	1.32	1.32	1.32	
	30	TC	4.87	4.87	4.87	4.93	5.19	5.19	5.19	5.19	5.33	5.33	5.33	5.33	5.76	5.76	5.76	5.76	
		S/T	0.71	0.79	0.87	0.94	0.57	0.65	0.72	0.80	0.51	0.59	0.66	0.73	0.37	0.44	0.50	0.57	
		PI	1.45	1.45	1.45	1.45	1.46	1.46	1.46	1.46	1.46	1.46	1.46	1.46	1.46	1.46	1.46	1.46	
	35	TC	4.62	4.62	4.67	4.73	4.93	4.93	4.93	4.93	5.07	5.07	5.16	5.07	5.48	5.48	5.48	5.48	
		S/T	0.72	0.80	0.88	0.96	0.58	0.66	0.74	0.82	0.51	0.59	0.66	0.74	0.37	0.44	0.51	0.58	
		PI	1.58	1.58	1.58	1.58	1.59	1.59	1.59	1.59	1.59	1.59	1.60	1.59	1.59	1.59	1.59	1.59	
	40	TC	4.34	4.34	4.38	4.43	4.63	4.63	4.63	4.63	4.77	4.77	4.82	4.77	5.16	5.16	5.16	5.16	
		S/T	0.73	0.83	0.92	1.00	0.59	0.67	0.76	0.85	0.52	0.60	0.68	0.77	0.36	0.44	0.51	0.59	
		PI	1.74	1.74	1.74	1.74	1.75	1.75	1.75	1.75	1.75	1.75	1.76	1.75	1.76	1.76	1.76	1.76	
	46	TC	4.03	4.03	4.06	4.09	4.29	4.29	4.29	4.29	4.43	4.43	4.43	4.43	4.80	4.80	4.80	4.80	
		S/T	0.74	0.84	0.93	1.00	0.59	0.68	0.77	0.86	0.52	0.61	0.69	0.78	0.36	0.44	0.52	0.60	
		PI	1.94	1.94	1.94	1.94	1.95	1.95	1.95	1.95	1.95	1.95	1.95	1.95	1.97	1.97	1.97	1.97	
	50	TC	3.77	3.77	3.80	3.83	4.03	4.03	4.03	4.06	4.17	4.17	4.17	4.17	4.51	4.51	4.51	4.51	
		S/T	0.76	0.86	0.96	1.00	0.60	0.69	0.79	0.88	0.52	0.61	0.71	0.80	0.35	0.44	0.52	0.91	
		PI	2.11	2.11	2.11	2.11	2.11	2.11	2.11	2.11	2.12	2.12	2.12	2.12	2.14	2.14	2.14	2.14	

680	-15	TC	5.74	5.74	5.74	5.80	6.05	6.05	6.05	6.05	6.20	6.20	6.20	6.20	6.57	6.57	6.57	6.57
		S/T	0.69	0.77	1.00	1.00	0.56	0.63	0.70	0.98	0.49	0.57	0.64	0.71	0.36	0.42	0.49	0.56
		PI	1.14	1.14	1.14	1.14	1.13	1.13	1.13	1.13	1.13	1.13	1.13	1.13	1.12	1.12	1.12	1.12
	-10	TC	5.71	5.71	5.71	5.77	6.02	6.02	6.02	6.02	6.17	6.17	6.17	6.17	6.55	6.55	6.55	6.55
		S/T	0.69	0.78	1.00	1.00	0.56	0.63	0.71	0.98	0.49	0.57	0.64	0.72	0.36	0.43	0.49	0.56
		PI	1.13	1.13	1.13	1.13	1.12	1.12	1.12	1.12	1.13	1.13	1.13	1.13	1.12	1.12	1.12	1.12
	-5	TC	5.67	5.67	5.67	5.73	6.00	6.00	6.00	6.00	6.15	6.15	6.15	6.15	6.53	6.53	6.53	6.53
		S/T	0.69	0.78	1.00	1.00	0.57	0.63	0.71	0.99	0.50	0.58	0.64	0.72	0.36	0.43	0.50	0.57
		PI	1.13	1.13	1.13	1.13	1.12	1.12	1.12	1.12	1.13	1.13	1.13	1.13	1.13	1.13	1.13	1.13
	0	TC	5.65	5.65	5.65	5.71	5.97	5.97	5.97	5.97	6.13	6.13	6.13	6.13	6.53	6.53	6.53	6.53
		S/T	0.70	0.78	1.00	1.00	0.57	0.64	0.72	0.99	0.50	0.58	0.65	0.73	0.36	0.43	0.50	0.57
		PI	1.13	1.13	1.13	1.13	1.13	1.13	1.13	1.13	1.13	1.13	1.13	1.13	1.13	1.13	1.13	1.13
	5	TC	5.62	5.62	5.62	5.68	5.95	5.95	5.95	5.95	6.11	6.11	6.11	6.11	6.52	6.52	6.52	6.52
		S/T	0.70	0.79	1.00	1.00	0.57	0.64	0.72	1.00	0.50	0.58	0.65	0.73	0.36	0.43	0.50	0.57
		PI	1.14	1.14	1.14	1.14	1.14	1.14	1.14	1.14	1.14	1.14	1.14	1.14	1.14	1.14	1.14	1.14
	10	TC	5.58	5.58	5.58	5.64	5.92	5.92	5.92	5.92	6.09	6.09	6.09	6.09	6.51	6.51	6.51	6.51
		S/T	0.70	0.79	1.00	1.00	0.57	0.64	0.72	1.00	0.50	0.58	0.65	0.73	0.37	0.44	0.50	0.57
		PI	1.16	1.16	1.16	1.16	1.15	1.15	1.15	1.15	1.16	1.16	1.16	1.16	1.15	1.15	1.15	1.15
	15	TC	5.54	5.54	5.54	5.60	5.88	5.88	5.88	5.88	6.05	6.05	6.05	6.05	6.48	6.48	6.48	6.48
		S/T	0.71	0.80	0.88	0.96	0.58	0.65	0.73	0.81	0.51	0.59	0.66	0.74	0.37	0.44	0.51	0.58
		PI	1.19	1.19	1.19	1.19	1.18	1.18	1.18	1.18	1.18	1.18	1.18	1.18	1.18	1.18	1.18	1.18
	20	TC	5.48	5.48	5.48	5.53	5.82	5.82	5.82	5.82	5.99	5.99	5.99	5.99	6.42	6.42	6.42	6.42
		S/T	0.71	0.80	0.88	0.96	0.58	0.65	0.73	0.81	0.51	0.59	0.66	0.74	0.37	0.44	0.51	0.58
		PI	1.23	1.23	1.23	1.23	1.22	1.22	1.22	1.22	1.22	1.22	1.22	1.22	1.21	1.21	1.21	1.21
	25	TC	5.22	5.22	5.28	5.33	5.56	5.56	5.56	5.56	5.73	5.73	5.73	5.73	6.16	6.16	6.16	6.16
		S/T	0.72	0.81	0.89	0.97	0.58	0.66	0.74	0.83	0.51	0.59	0.67	0.75	0.36	0.44	0.51	0.58
		PI	1.35	1.35	1.35	1.35	1.35	1.35	1.35	1.35	1.35	1.35	1.35	1.35	1.35	1.35	1.35	1.35
	30	TC	4.99	4.99	5.05	5.10	5.30	5.30	5.30	5.30	5.45	5.45	5.45	5.45	5.88	5.88	5.88	5.88
		S/T	0.73	0.82	0.91	0.99	0.58	0.67	0.76	0.84	0.52	0.60	0.68	0.77	0.36	0.44	0.51	0.59
		PI	1.49	1.49	1.49	1.49	1.49	1.49	1.49	1.49	1.49	1.49	1.49	1.49	1.50	1.50	1.50	1.50
	35	TC	4.73	4.73	4.79	4.85	5.05	5.05	5.05	5.05	5.19	5.19	**5.28**	5.19	5.59	5.59	5.59	5.59
		S/T	0.74	0.84	0.93	1.00	0.59	0.68	0.77	0.86	0.52	0.61	**0.69**	0.78	0.36	0.44	0.52	0.60
		PI	1.62	1.62	1.62	1.62	1.62	1.62	1.62	1.62	1.63	1.63	**1.63**	1.63	1.64	1.64	1.64	1.64
	40	TC	4.44	4.45	4.50	4.54	4.74	4.74	4.74	4.77	4.89	4.89	4.93	4.89	5.27	5.27	5.27	5.27
		S/T	0.76	0.87	0.97	1.00	0.60	0.70	0.80	0.89	0.52	0.62	0.72	0.81	0.35	0.44	0.53	0.90
		PI	1.79	1.79	1.79	1.79	1.79	1.79	1.79	1.79	1.80	1.80	1.80	1.80	1.81	1.81	1.81	1.81
	46	TC	4.11	4.14	4.17	4.20	4.40	4.40	4.40	4.46	4.54	4.54	4.54	4.54	4.91	4.91	4.91	4.91
		S/T	0.77	0.88	0.99	1.00	0.60	0.71	0.81	0.91	0.53	0.63	0.73	0.83	0.35	0.44	0.53	0.92
		PI	1.99	1.99	1.99	1.99	1.99	1.99	1.99	1.99	2.00	2.00	2.00	2.00	2.02	2.02	2.02	2.02
	50	TC	3.86	3.89	3.91	3.94	4.11	4.11	4.11	4.14	4.26	4.26	4.26	4.26	4.63	4.63	4.63	4.63
		S/T	0.79	0.91	1.00	1.00	0.61	0.72	0.83	0.94	0.53	0.64	0.74	0.85	0.34	0.44	0.54	0.97
		PI	2.15	2.15	2.15	2.15	2.16	2.16	2.16	2.16	2.17	2.17	2.17	2.17	2.19	2.19	2.19	2.19

TC:Total Cooling Capacity (kW)

S/T:Sensible Cooling Capacity Ratio

PI:Power Input(kW)

Note: The table shows the case where the operation frequency of a compressor is fixed.

8.2 Heating

12k									[SI_Unit]
INDOOR AIRFLOW (CMH)	HEATING PERFORMANCE AT INDOOR DRY BULB TEMPERATURE								
	OUTDOOR DB(°C)	TC:TOTAL CAPACITY IN KILOWATTS (KW)				PI:TOTAL POWER IN KILOWATTS (KW)			
		Indoor Conditions (DB °C)				Indoor Conditions (DB °C)			
		16.0	20.0	22.0	24.0	16.0	20.0	22.0	24.0
389	-15.0	2.61	2.56	2.56	2.53	1.16	1.20	1.18	1.19
	-10.0	2.79	2.73	2.73	2.71	1.24	1.28	1.26	1.27
	-7.0	2.92	2.86	2.86	2.83	1.31	1.36	1.33	1.34
	-5.6	2.98	2.92	2.92	2.89	1.29	1.30	1.31	1.31
	-2.8	3.04	3.01	2.98	2.95	1.22	1.23	1.24	1.24
	0.0	3.07	3.01	3.01	2.98	1.16	1.17	1.17	1.17
	2.8	3.21	3.15	3.12	3.12	1.11	1.11	1.11	1.12
	5.6	3.44	3.41	3.38	3.35	1.06	1.06	1.06	1.06
	7.0	3.73	3.69	3.61	3.61	1.03	1.00	1.03	1.03
	11.1	3.90	3.84	3.81	3.78	0.94	0.94	0.94	0.94
	13.9	4.04	3.98	3.96	3.93	0.89	0.88	0.88	0.87
	16.7	4.19	4.13	4.10	4.07	0.83	0.82	0.81	0.81
	18.0	4.25	4.19	4.16	4.13	0.80	0.79	0.78	0.78
485	-15.0	2.63	2.60	2.60	2.58	1.18	1.22	1.20	1.20
	-10.0	2.81	2.78	2.78	2.75	1.26	1.30	1.27	1.27
	-7.0	2.94	2.91	2.91	2.88	1.33	1.38	1.35	1.35
	-5.6	3.01	2.98	2.98	2.95	1.30	1.31	1.31	1.32
	-2.8	3.09	3.07	3.04	3.01	1.24	1.25	1.25	1.26
	0.0	3.12	3.09	3.07	3.04	1.17	1.18	1.18	1.19
	2.8	3.27	3.24	3.21	3.18	1.12	1.12	1.12	1.13
	5.6	3.53	3.47	3.47	3.44	1.06	1.07	1.07	1.07
	7.0	3.84	3.78	3.69	3.66	1.04	1.01	1.04	1.04
	11.1	3.98	3.93	3.90	3.90	0.95	0.95	0.95	0.94
	13.9	4.13	4.07	4.04	4.01	0.89	0.89	0.88	0.88
	16.7	4.28	4.22	4.19	4.16	0.83	0.82	0.82	0.81
	18.0	4.36	4.30	4.28	4.22	0.81	0.79	0.79	0.78
569	-15.0	2.66	2.64	2.61	2.59	1.19	1.23	1.20	1.21
	-10.0	2.84	2.82	2.79	2.76	1.27	1.31	1.28	1.29
	-7.0	2.98	2.95	2.92	2.89	1.34	1.39	1.36	1.37
	-5.6	3.07	3.04	3.01	2.98	1.31	1.32	1.32	1.33
	-2.8	3.12	3.09	3.07	3.07	1.25	1.26	1.27	1.27
	0.0	3.15	3.12	3.09	3.07	1.19	1.19	1.20	1.20
	2.8	3.30	3.27	3.24	3.21	1.13	1.14	1.14	1.14
	5.6	3.56	3.50	3.50	3.47	1.08	1.08	1.08	1.08
	7.0	3.87	3.81	3.72	3.69	1.05	1.02	1.05	1.05
	11.1	4.01	3.96	3.93	3.90	0.96	0.96	0.96	0.95
	13.9	4.16	4.10	4.07	4.04	0.90	0.90	0.89	0.89
	16.7	4.30	4.25	4.22	4.19	0.84	0.83	0.83	0.82
	18.0	4.39	4.30	4.28	4.25	0.81	0.80	0.80	0.79

Note: The table shows the case where the operation frequency of a compressor is fixed.

18k									[SI_Unit]
INDOOR AIRFLOW (CMH)	HEATING PERFORMANCE AT INDOOR DRY BULB TEMPERATURE								
	OUTDOOR DB(°C)	TC:TOTAL CAPACITY IN KILOWATTS (KW)				PI:TOTAL POWER IN KILOWATTS (KW)			
		Indoor Conditions (DB °C)				Indoor Conditions (DB °C)			
		16.0	20.0	22.0	24.0	16.0	20.0	22.0	24.0
479	-15.0	3.61	3.56	3.54	3.51	1.54	1.59	1.58	1.59
	-10.0	3.86	3.80	3.78	3.75	1.64	1.70	1.68	1.70
	-7.0	4.04	3.98	3.96	3.93	1.75	1.81	1.79	1.81
	-5.6	4.19	4.13	4.10	4.07	1.72	1.75	1.76	1.77
	-2.8	4.30	4.25	4.22	4.22	1.66	1.69	1.70	1.71
	0.0	4.39	4.33	4.30	4.27	1.61	1.63	1.64	1.65
	2.8	4.62	4.57	4.54	4.51	1.57	1.59	1.60	1.61
	5.6	5.03	4.97	4.94	4.91	1.53	1.55	1.56	1.57
	7.0	5.46	5.39	5.28	5.22	1.50	1.50	1.53	1.54
	11.1	5.74	5.66	5.63	5.57	1.43	1.45	1.45	1.46
	13.9	5.97	5.89	5.86	5.80	1.39	1.40	1.40	1.41
	16.7	6.21	6.12	6.09	6.03	1.34	1.35	1.35	1.36
	18.0	6.32	6.24	6.21	6.15	1.32	1.32	1.33	1.33
584	-15.0	3.69	3.64	3.61	3.59	1.56	1.61	1.59	1.60
	-10.0	3.94	3.88	3.86	3.83	1.66	1.71	1.70	1.71
	-7.0	4.12	4.07	4.04	4.01	1.77	1.82	1.81	1.82
	-5.6	4.27	4.22	4.19	4.16	1.73	1.76	1.77	1.79
	-2.8	4.39	4.33	4.33	4.30	1.68	1.70	1.72	1.73
	0.0	4.48	4.42	4.39	4.36	1.63	1.65	1.66	1.67
	2.8	4.74	4.68	4.65	4.59	1.59	1.61	1.62	1.63
	5.6	5.15	5.09	5.06	5.00	1.55	1.57	1.58	1.58
	7.0	5.57	5.51	5.37	5.34	1.52	1.52	1.55	1.56
	11.1	5.86	5.77	5.74	5.68	1.45	1.47	1.47	1.48
	13.9	6.09	6.00	5.97	5.95	1.41	1.42	1.42	1.43
	16.7	6.35	6.26	6.21	6.18	1.36	1.37	1.37	1.38
	18.0	6.47	6.38	6.32	6.29	1.34	1.35	1.35	1.36
680	-15.0	3.72	3.67	3.64	3.61	1.57	1.62	1.60	1.62
	-10.0	3.97	3.91	3.89	3.86	1.67	1.73	1.71	1.73
	-7.0	4.16	4.10	4.07	4.04	1.78	1.84	1.82	1.84
	-5.6	4.30	4.25	4.22	4.19	1.75	1.78	1.79	1.80
	-2.8	4.45	4.39	4.36	4.33	1.70	1.72	1.73	1.75
	0.0	4.54	4.48	4.45	4.42	1.64	1.67	1.68	1.69
	2.8	4.77	4.71	4.68	4.65	1.60	1.63	1.64	1.65
	5.6	5.20	5.12	5.09	5.06	1.57	1.59	1.59	1.60
	7.0	5.66	5.57	5.42	5.39	1.54	1.54	1.57	1.58
	11.1	5.92	5.83	5.80	5.77	1.47	1.49	1.49	1.50
	13.9	6.18	6.09	6.03	6.00	1.43	1.44	1.45	1.45
	16.7	6.41	6.32	6.29	6.24	1.38	1.39	1.40	1.40
	18.0	6.55	6.44	6.41	6.35	1.36	1.37	1.37	1.38

Note: The table shows the case where the operation frequency of a compressor is fixed.

9. Noise Criterion Curves

9.1 Indoor Unit

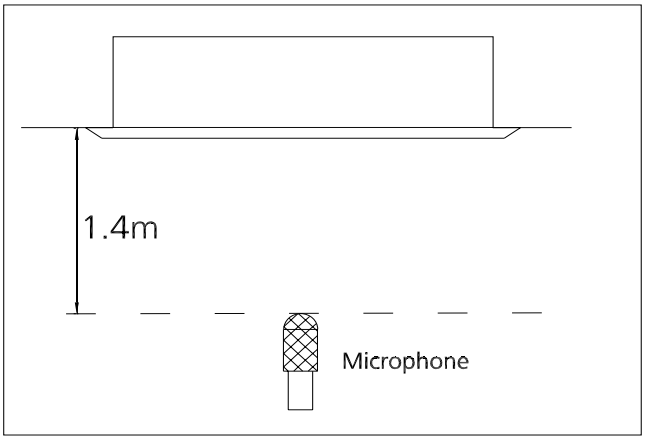

Notes:

-Sound measured at 1.4m away from the noisiest location of the unit.

-Data is valid at free field condition

-Data is valid at nominal operation condition

-Reference acoustic pressure OdB = 20μPa

-Sound level will vary depending on a range of factors such as the construction -(acoustic absorption coefficient) of particular room in which the equipment is installed.

-The operating conditions are assumed to be standard.

MCA3U-12HRFNX-QRD0W(GA)

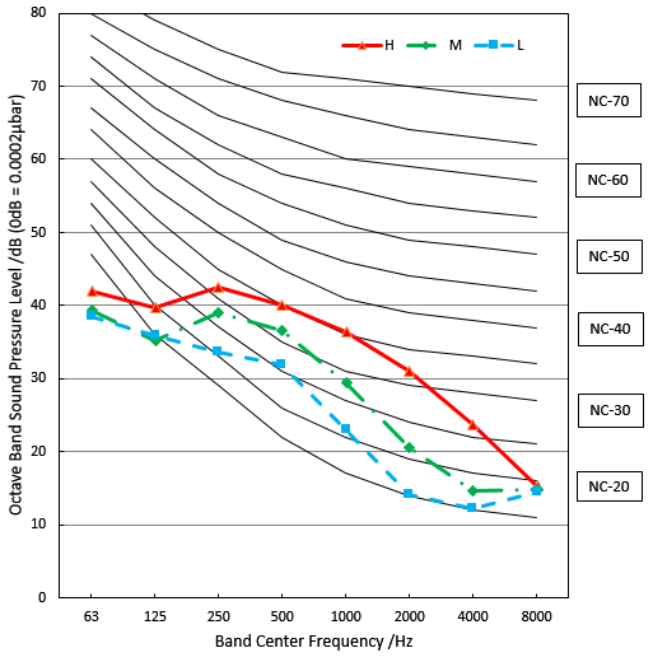

MCA3U-18HRFNX-QRD0W(GA)

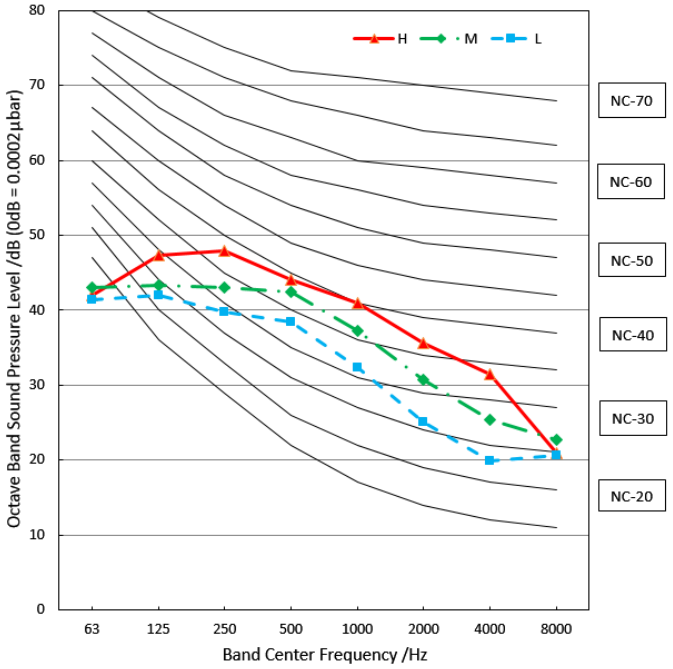

10. Electrical Characteristics

Capacity (Btu/h)		12k~18k
OUDOOR UNIT POWER	Phase	1-phase
	Frequency and Voltage	220-240V, 50Hz
	Power Wiring (mm^2)	3×1.5
	Circuit Breaker/ Fuse (A)	25/20
Indoor/Outdoor Connecting Wiring	Weak Electric Signal)(mm^2)	
	Strong Electric Signal(mm^2)	4×1.0

11. Electrical Wiring Diagrams

IDU Model	IDU Wiring Diagram
MCA3U-12HRFNX-QRD0W(GA)	16022500004023
MCA3U-18HRFNX-QRD0W(GA)	

Abbreviation	Paraphrase
Y/G	Yellow-Green Conductor
CAP1	Indoor Fan Capacitor
FAN1	Indoor Fan
PUMP	PUMP
L	LIVE
N	NEUTRAL
TO CCM Comm.Bus	Central Controller
T1	Indoor Room Temperature
T2	Coil Temperature of Indoor Heat Exchanger
P1	Super High Speed
P2	High Speed

Indoor unit wiring diagram: 16022500004023

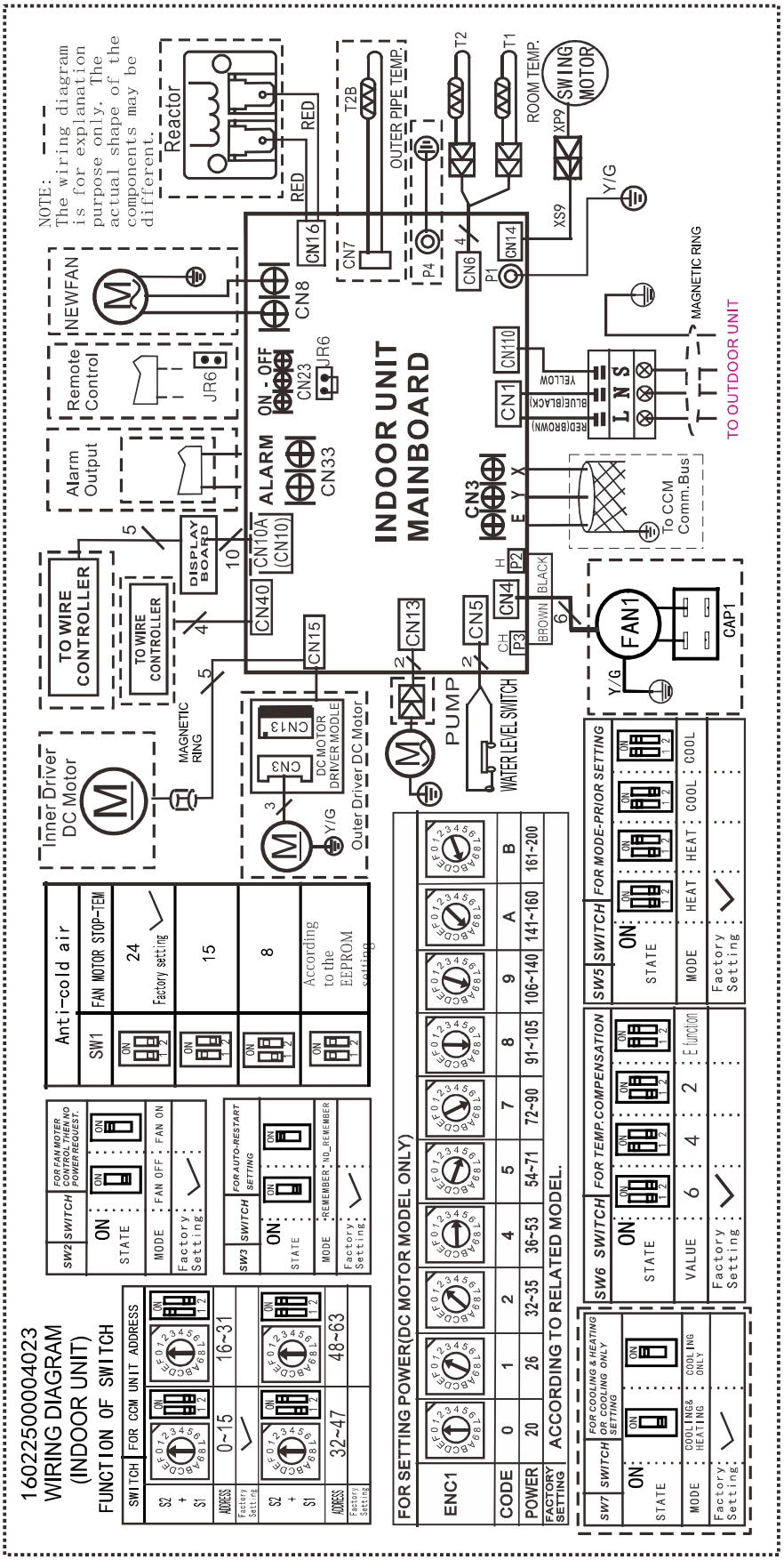

10.1 Some connectors introduce:

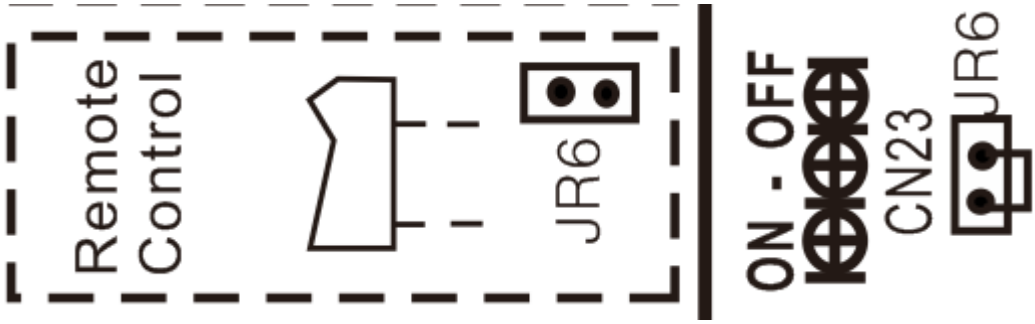

A For remote control (ON-OFF) terminal port CN23 and short connector of JR6

1. Remove the short connector of JR6 when you use ON-OFF function;
2. When remote switch off (OPEN) ;the unit would be off;
3. When remote switch on (CLOSE) ;the unit would be on;
4. When close/open the remote switch, the unit would be responded the demand within 2 seconds;
5. When the remote switch on. you can use remote controller/ wire controller to select the mode what you want ;when the remote switch off , the unit would not respond the demand from remote controller/wire controller.

when the remote switch off , but the remote controller / wire controller are on, CP code would be shown on the display board.

6.The voltage of the port is 12V DC , design Max.current is 5mA.

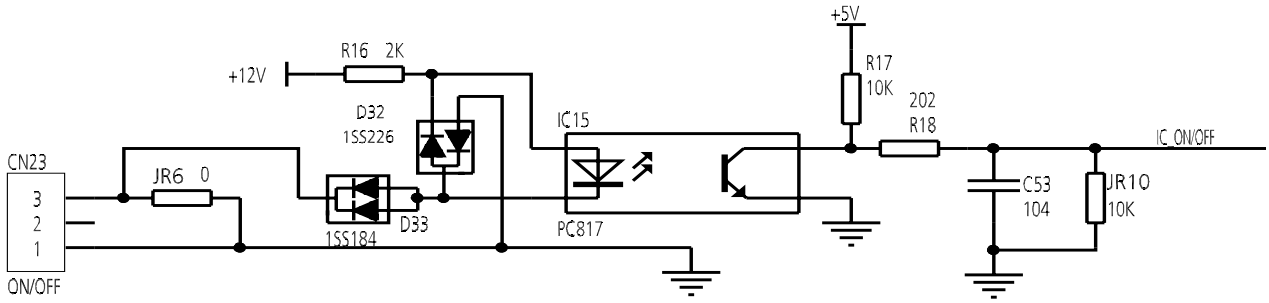

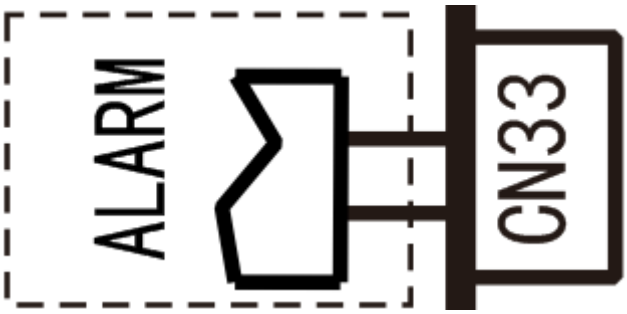

B For ALARM terminal port CN33

1. Provide the terminal port to connect ALARM ,but no voltage of the terminal port , the power from the ALARM system (not from the unit)
2. Although design voltage can support higher voltage ,but we strongly ask you connect the power less than 24V, current less than 0.5A
3. When the unit occurs the problem , the relay would be closed , then ALARM works

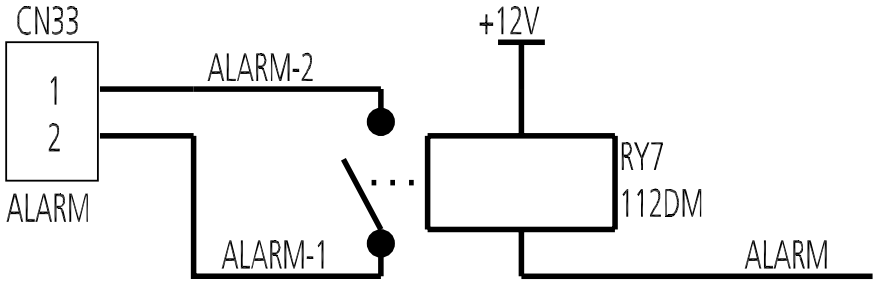

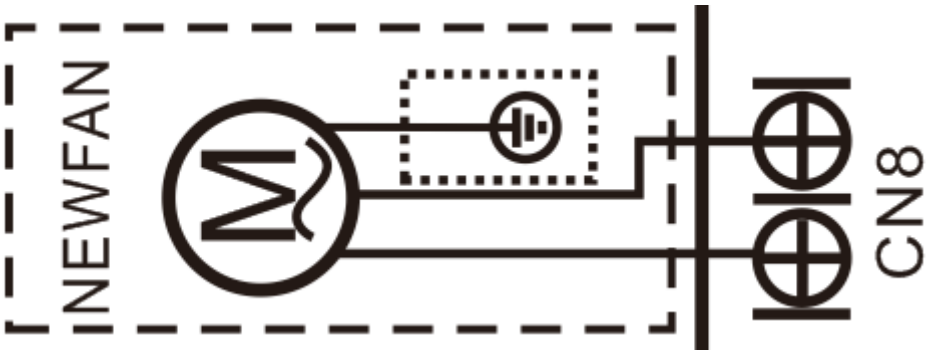

C. For new fresh motor terminal port CN8
1. Connect the fan motor to the port , no need care L/N of the motor ;
2. The output voltage is the power supply;
3. The fresh motor can not excess 200W or 1A , follow the smaller one ;
4. The new fresh motor will be worked when the indoor fan motor work ;when the indoor fan mo tor stops , the new fresh motor would be stopped ;
5. When the unit enter force cooling mode or capacity testing mode , the fresh motor isn't work .

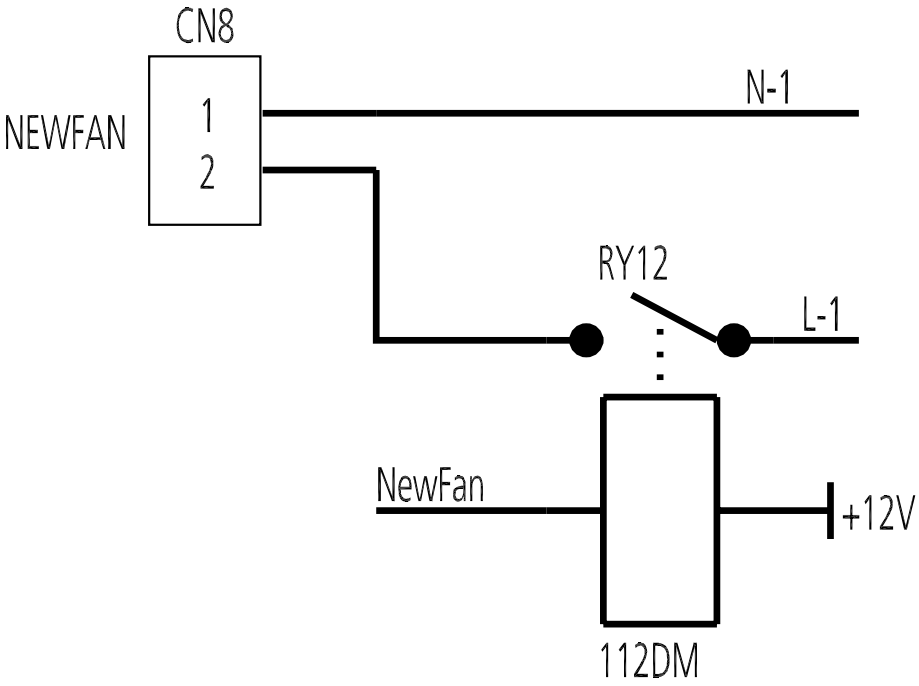

10.2 Micro-Switch Introduce:

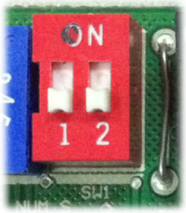

Anti-cold air	
SW1	FAN MOTOR STOP-TEM
ON 1 2	24 Factory setting
ON 1 2	15
ON 1 2	8
ON 1 2	According to the EEPROM setting

A. Micro-switch SW1 is for selection of indoor fan stop temperature (TEL0) when it is in anti-cold wind action in heating mode.

Range: 24°C, 15°C, 8°C, According to EEROM setting (reserved for special customizing).

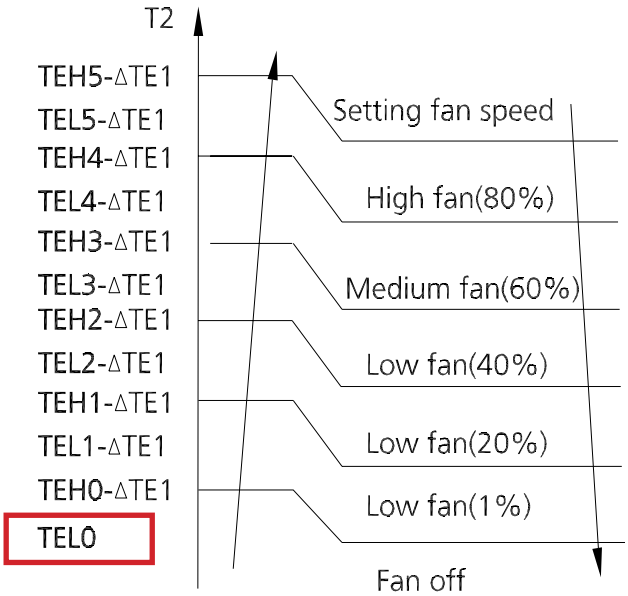



SW2 SWITCH	FOR FAN MOTER CONTROL THEN NO POWER REQUEST.	
ON: STATE	ON	ON
MODE	FAN OFF	FAN ON
Factory Setting	✓	

B.Micro-switch SW2 is for selection of indoor FAN ACTION if room temperature reaches the setponit and the compressor stops.

Range: OFF (anti-cold wind is available in heating mode), Keep running (No anti-cold wind function).



SW3	SWITCH	FOR AUTO-RESTART SETTING
STATE	ON	ON
MODE	REMEMBER	NO_REMEMBER
Factory Setting	✓	

C.Micro-switch SW3 is for selection of auto-restart function.
Range: Active, inactive



SW5	SWITCH	FOR MODE-PRIOR SETTING			
STATE	ON	ON	ON	ON	ON
MODE	HEAT	HEAT	COOL	COOL	
Factory Setting	✓				

D. Micro-switch SW5 is for setting mode priority of multi connection.
Range: Heat, cool.

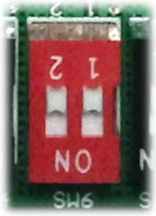

SW6	SWITCH	FOR TEMP.COMPENSATION			
STATE	ON	ON	ON	ON	
VALUE	6	4	2	E function	
Factory Setting	✓				

E.Micro-switch SW6 is for selection of temperature compensation in heating mode. This helps to reduce the real temperature difference between ceiling and floor so that the unit could run properly.

If the height of installation is lower, smaller value could be chosen.

Range: 6°C, 4°C, 2°C, E function (reserved for special customizing)

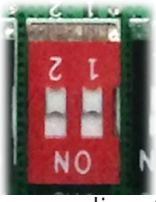

SW7	SWITCH	FOR COOLING & HEATING OR COOLING ONLY SETTING
STATE	ON	ON
MODE	COOLING& HEATING	COOLING ONLY
Factory Setting	✓	

F.Micro-switch SW7 is for setting cooling &heating or cooling only.

Range: cooling &heating, cooling.

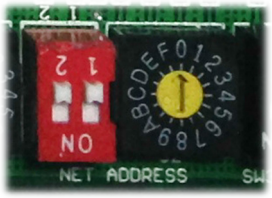

SWITCH	FOR CCM UNIT ADDRESS	
S2 + S1		
ADDRESS	0~15	16~31
Factory Setting	✓	
S2 + S1		
ADDRESS	32~47	48~63
Factory Setting		

G.Micro-switch S1 and dial-switch S2 are for address setting when you want to control this unit by a central controller.
Range: 00-63



FOR SETTING POWER(DC MOTOR MODEL ONLY)										
ENC1										
CODE	0	1	2	4	5	7	8	9	A	B
POWER	20	26	32~35	36~53	54~71	72~90	91~105	106~140	141~160	161~200
FACTORY SETTING	ACCORDING TO RELATED MODEL.									

H. Dial-switch ENC1: The indoor PCB is universal designed for whole series units from 7K to 68K. This ENC1 setting will tell the main program what size the unit is.

NOTE: Usually there is glue on it because the switch position cannot be changed at random unless you want to use this PCB as a spare part to use in another unit. Then you have to select the right position to match the size of the unit.

“20” means 2kW (7K),“105” means 10.5kW(36K), and so on.

Indoor Unit-Super Slim Cassette

Contents

1. Feature....2
2. Dimensional Drawings....5
3. Part names....6
4. Service Place....6
5. Accessories....7
6 Air Velocity and Temperature Distributions....8
7. Capacity Tables....32
8. Noise Criterion Curves....53
9. Electrical Characteristics....55
10. Electrical Wiring Diagrams....56

1. Feature

1.1 360° Air Flow

- 360°directional wind can deliver air evenly throughout every corner in any space, reducing hot and cold spots in the room.

1.2 Easy Installation

- The Cassette is much slimmer due to the redesigned heat exchanger and overall structures. It now requires less space for installation.

1.3 Reserved Air Outlet for Duct

- The cassette unit is equipped with reserved connection for air outlet at the side of the indoor unit. It can connect to an air duct to cool a small room nearby.

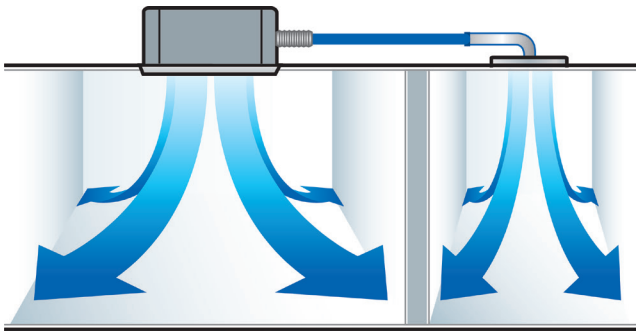

1.4 Reserved remote on-off and alarm ports(Optional for fixed-speed units, standard for inverter units)

- Remote on-off: With the reserved ports. a remote switch can be easily connected to realize remote control.
- Alarm: The built-in PCB can output alarm signal, which achieve setting up an external alarm light or vibration gauge possible.



1.5 Fresh Air

- Fresh air intake function brings you fresh and comfortable air feeling.



1.6 Wired Controller(Optional)

- Compared with infrared remote controller, wired controller can be fixed on the wall and avoid mislaying. It's mainly used for commercial zone and makes air conditioner control more convenient.

2. Dimensional Drawings

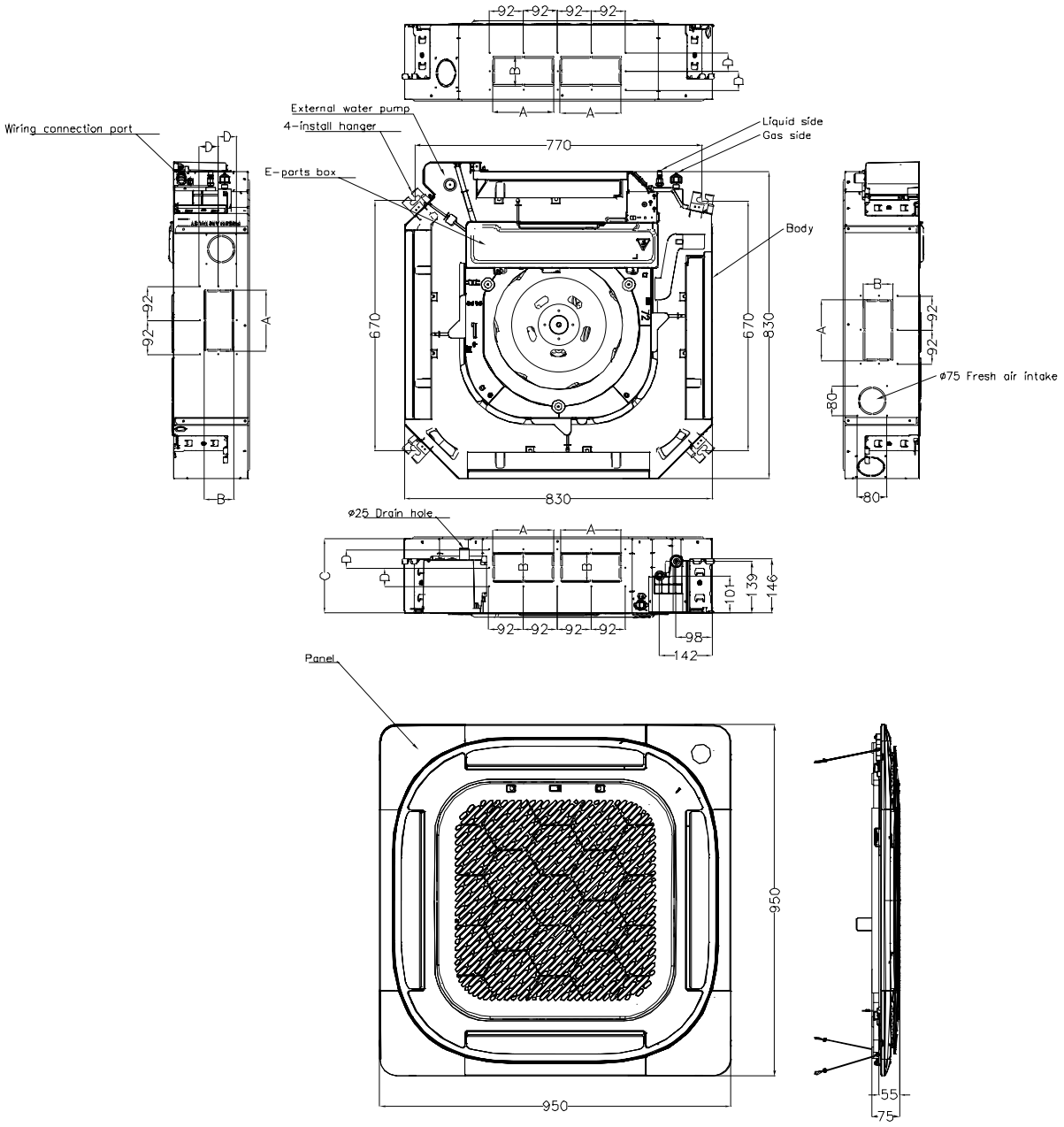

Model (KBtu/h)	Unit	A	B	C	D
24	mm	165	80	205	50
	inch	6.50	3.15	8.07	1.97
30~36	mm	165	100	245	60
	inch	6.50	3.94	9.65	2.36
42~60	mm	165	100	287	60
	inch	6.50	3.94	11.30	2.36

3. Part names

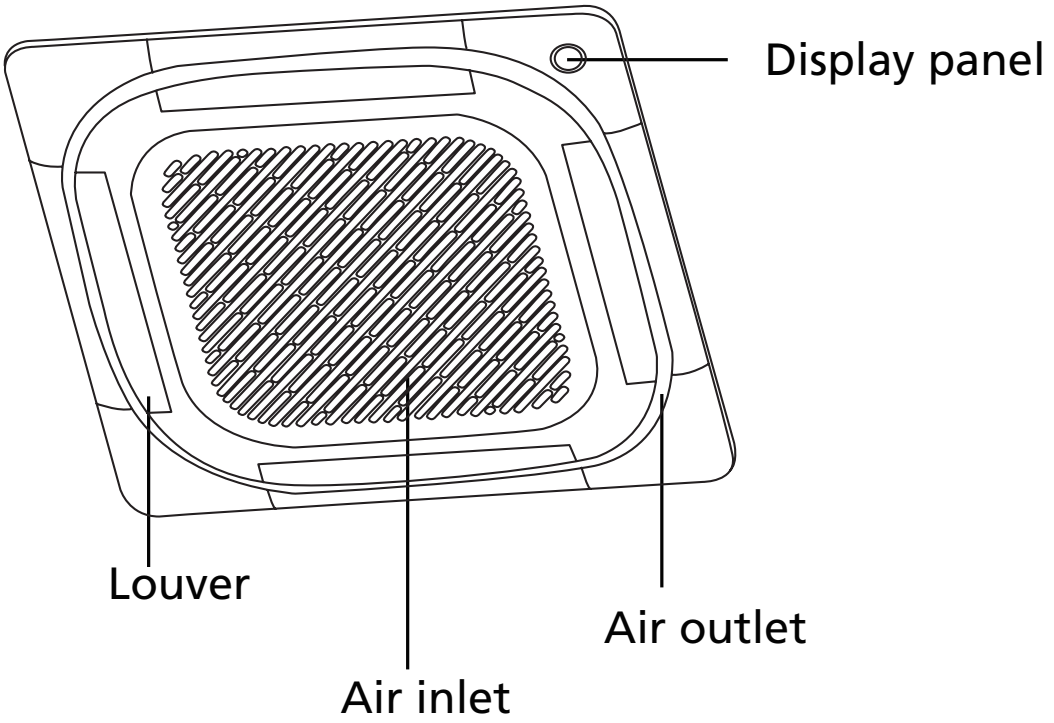

4. Service Place

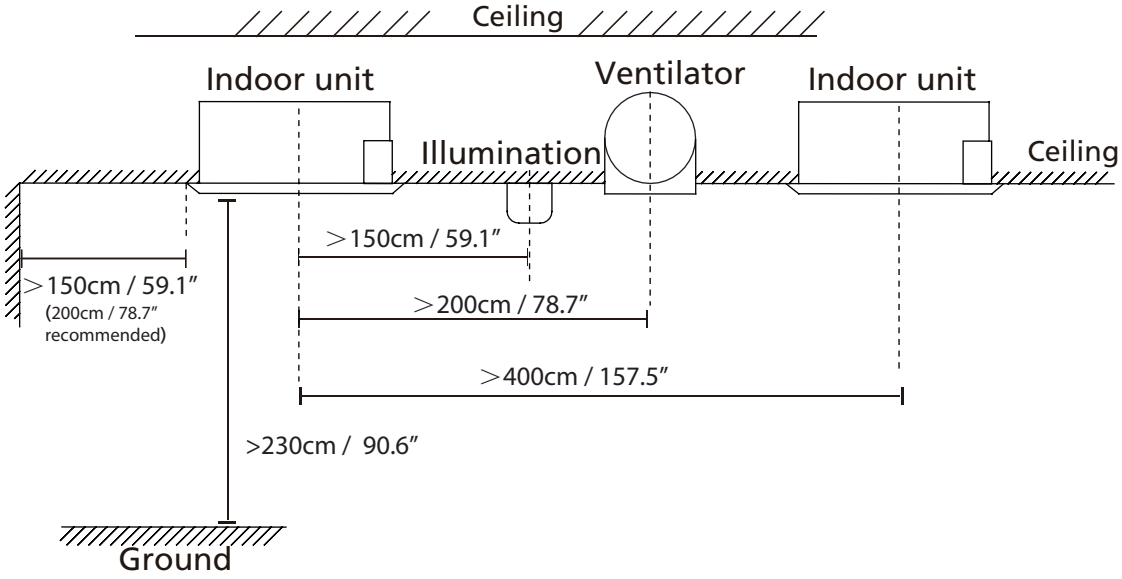

5. Accessories

The air conditioning system comes with the following accessories. Use all of the installation parts and accessories to install the air conditioner. Improper installation may result in water leakage, electrical shock and fire, or equipment failure.

	Name	Shape	Quantity
Indoor unit installation	Installation paper template (some models)	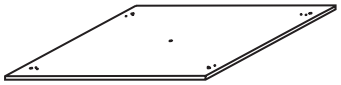	1
Refrigeration Fittings	Soundproof/insulation sheath (some models)		1
	Soundproof/insulation sheath (some models)		1
	Copper nut		2
Drainpipe Fittings	Outlet pipe sheath(some models)		1
	Outlet pipe clasp(some models)		1
	Drain joint (some models)	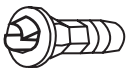	1
	Seal ring (some models)		1
	Throat bander		2
EMC Magnetic Ring (some models)	Magnetic ring (wrap the electric wires S1 & S2 (P & Q & E) around the magnetic ring twice)	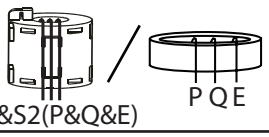	1
	Magnetic ring (Hitch it on the connective cable between indoor unit and outdoor unit after installation)	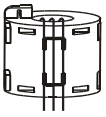	1
Installation Accessory (some models)	Ceiling hook	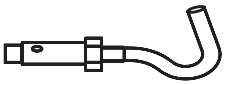	4
	Suspension bolt		4
	Throttle		1
	Anti-shock rubber		1
	Manual		2-4

Optional accessories:

- There are two types of remote controls: wired and wireless.
- Select a remote controller based on customer preferences and requirements and install in an appropriate place.
- Refer to catalogues and technical literature for guidance on selecting a suitable remote controller.

6. Air Velocity and Temperature Distributions

18K

Discharge Angle 30°

Cooling airflow velocity distributions

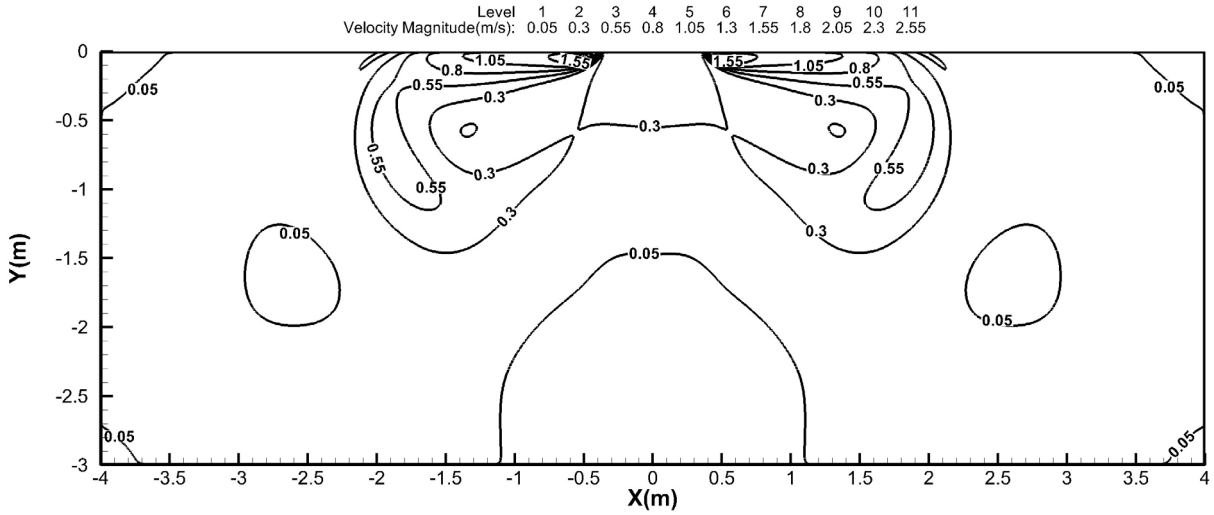

Cooling temperature distributions

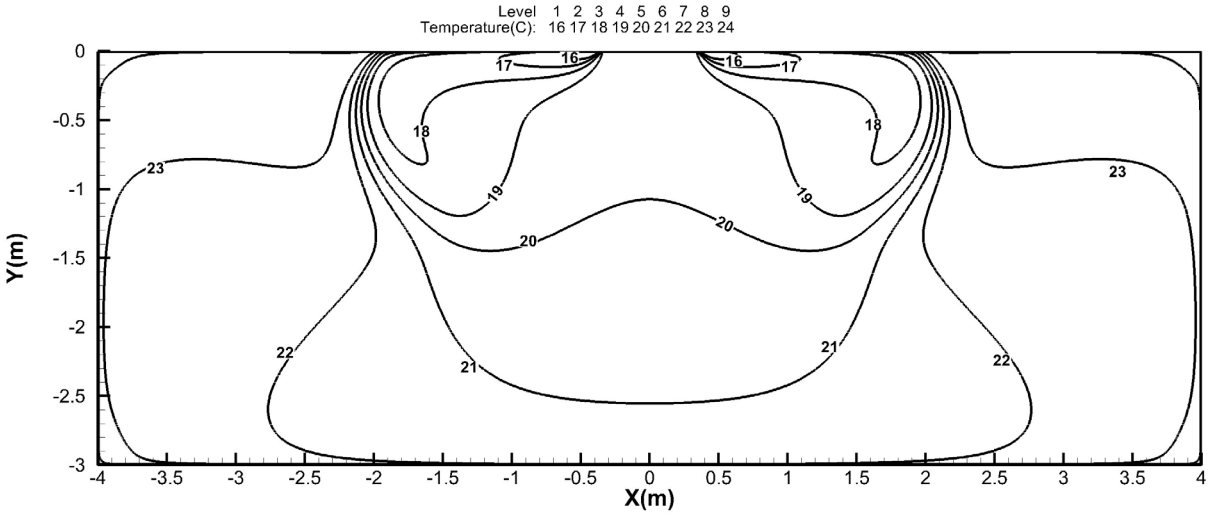

18K

Discharge Angle 30°

Heating airflow velocity distributions

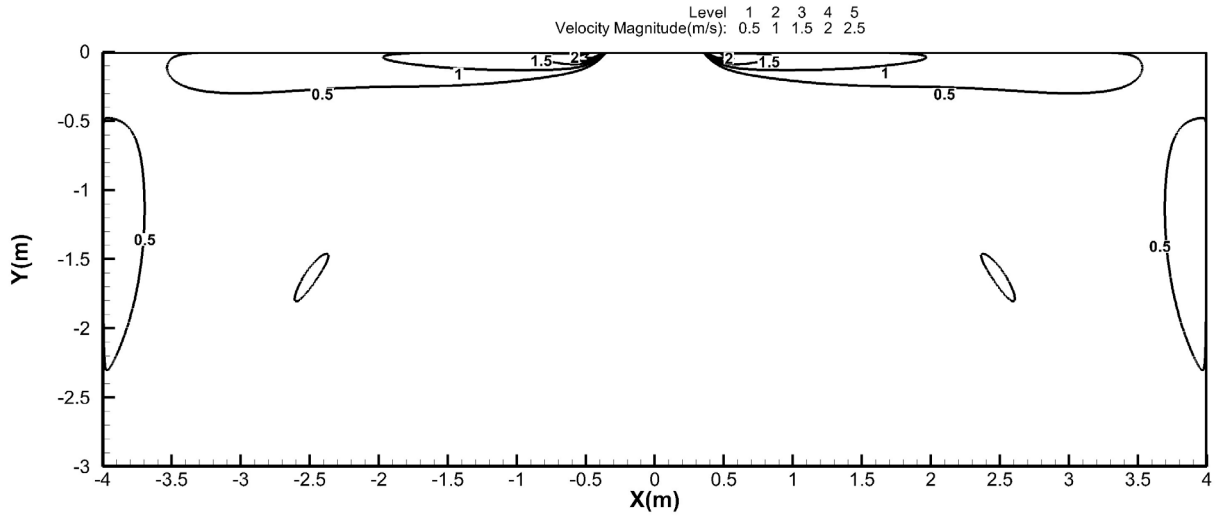

Heating temperature distributions

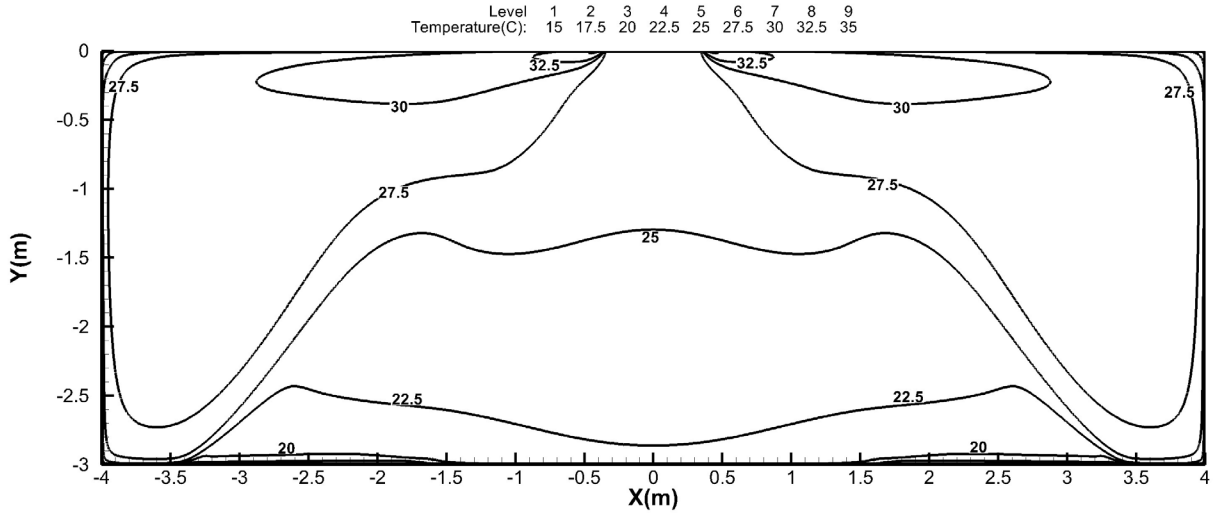

18K

Discharge Angle 60°

Cooling airflow velocity distributions

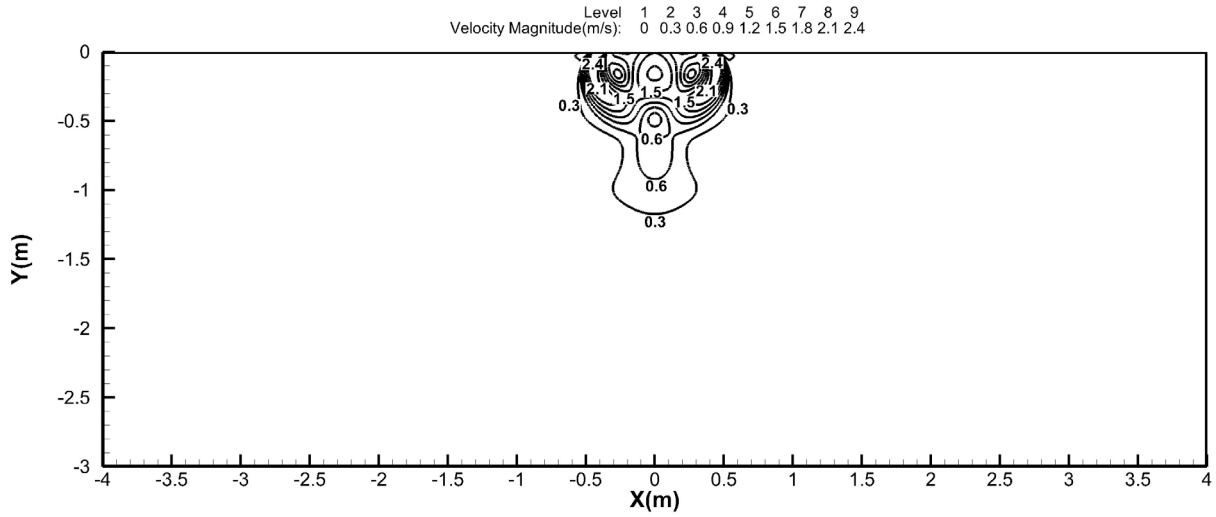

Cooling temperature distributions

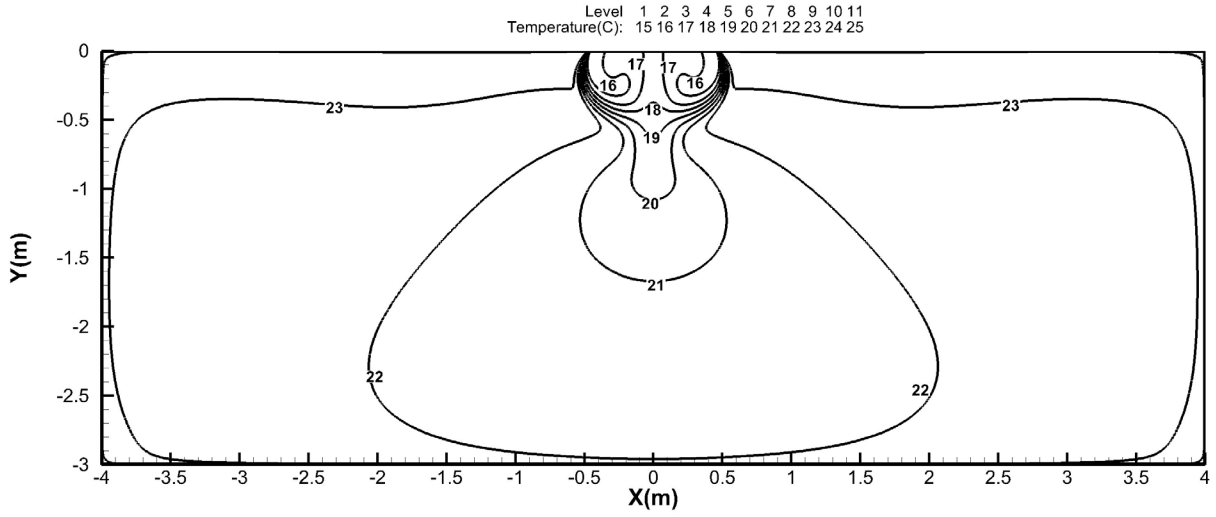

18K

Discharge Angle 60°

Heating airflow velocity distributions

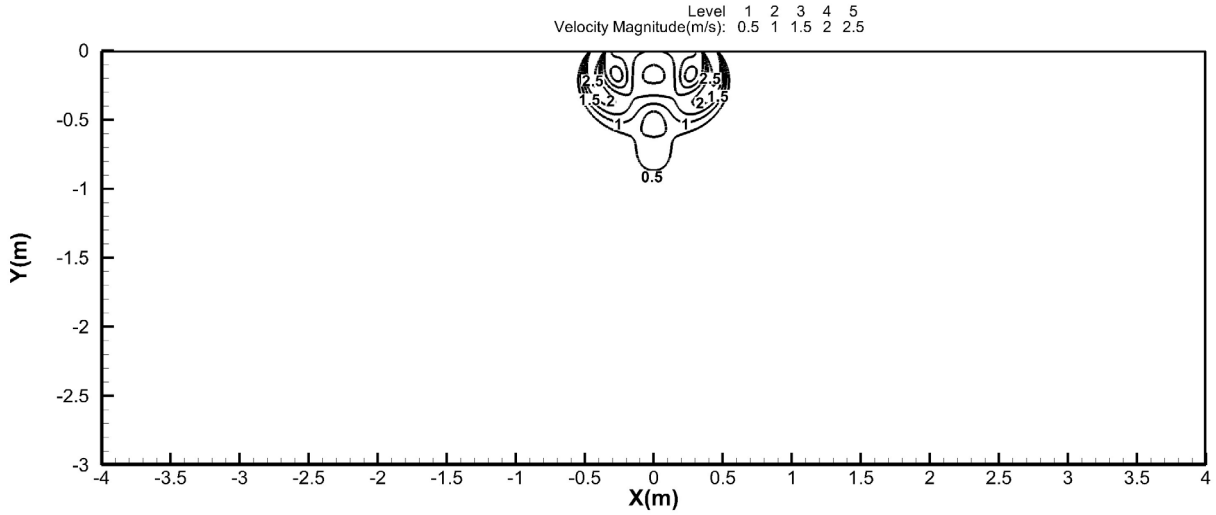

Heating temperature distributions

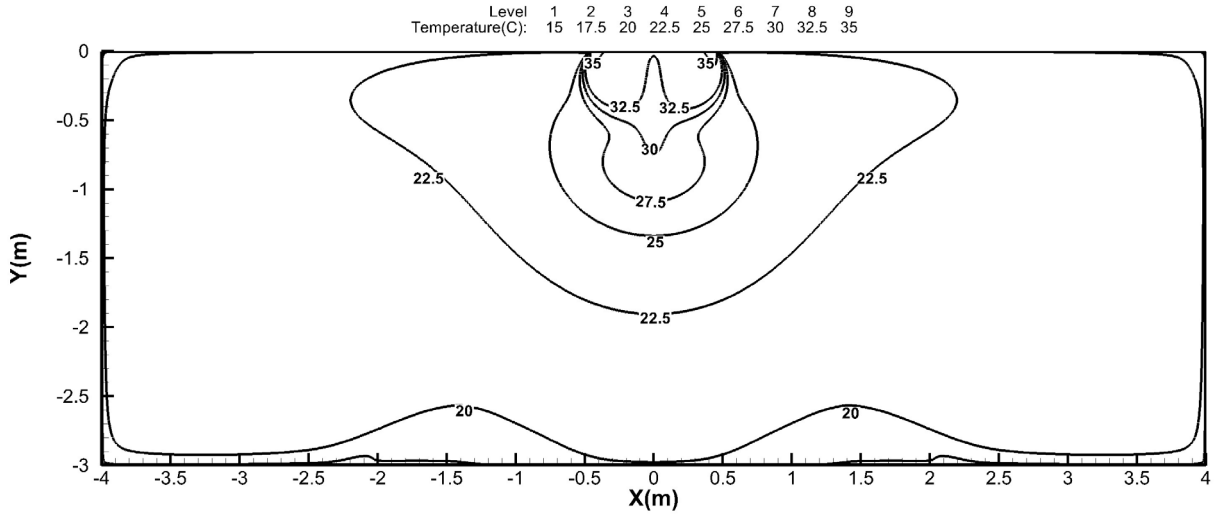

24K

Discharge Angle 30°

Cooling airflow velocity distributions

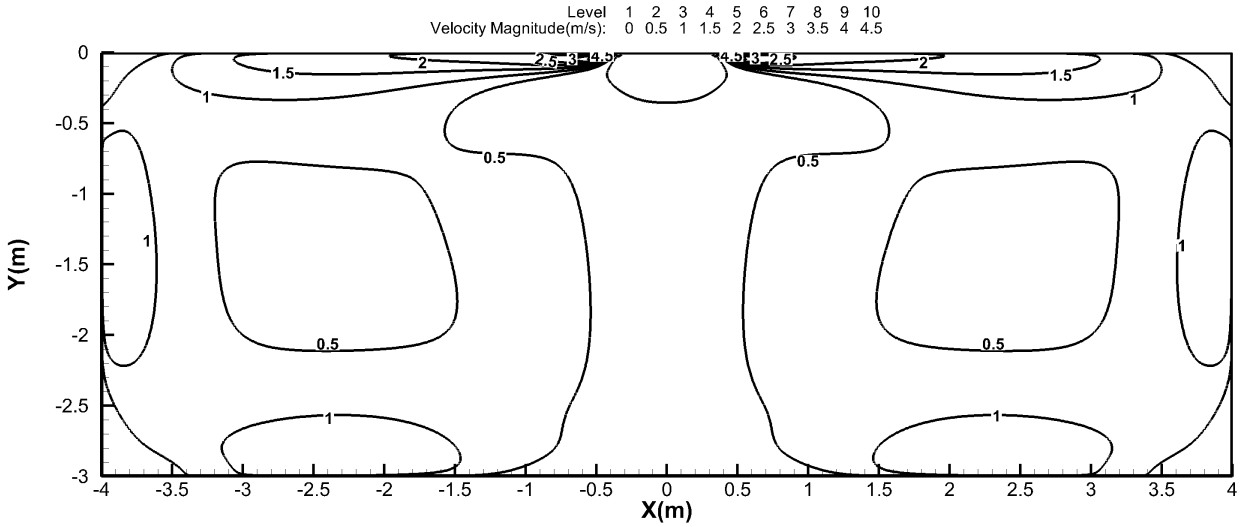

Cooling temperature distributions

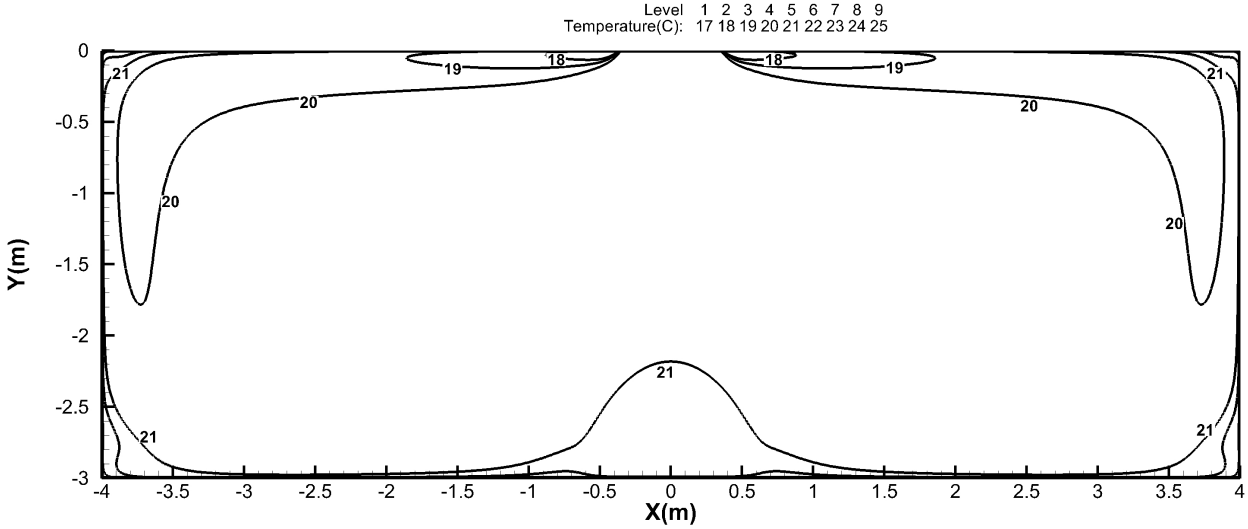

24K

Discharge Angle 30°

Heating airflow velocity distributions

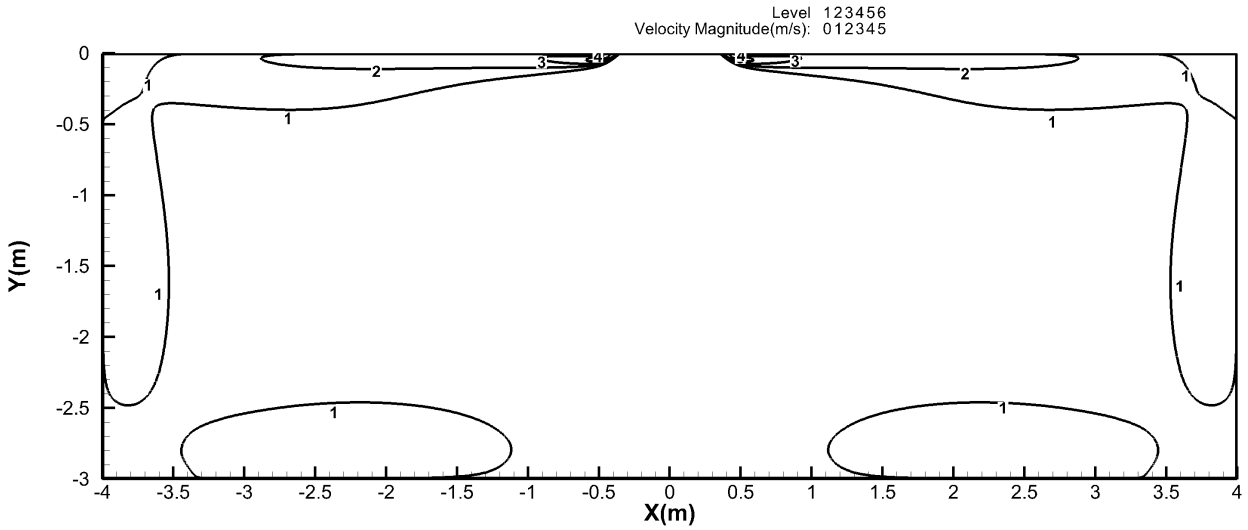

Heating temperature distributions

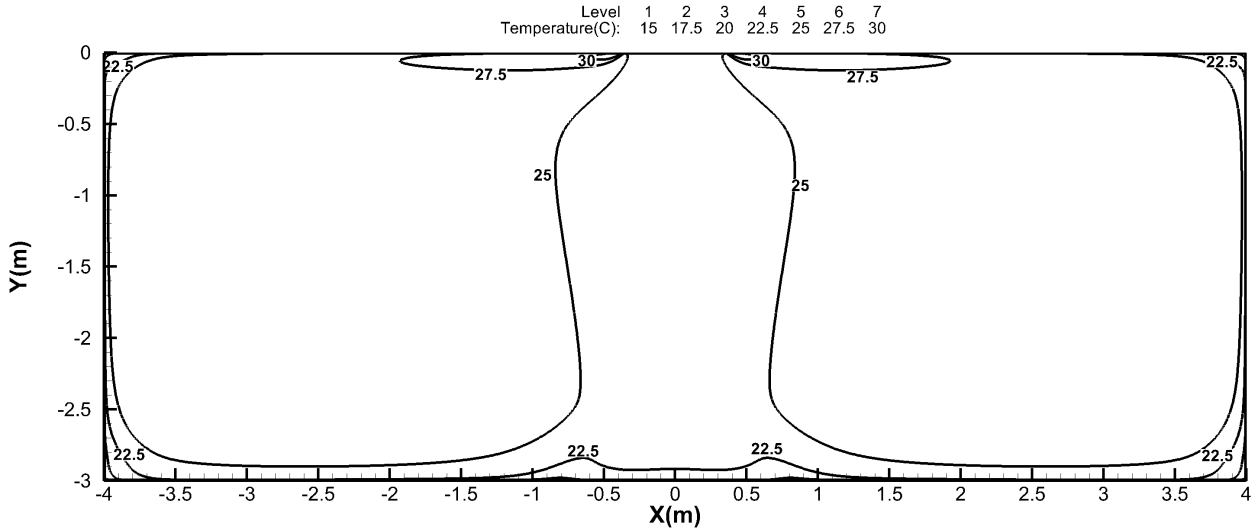

24K

Discharge Angle 60°

Cooling airflow velocity distributions

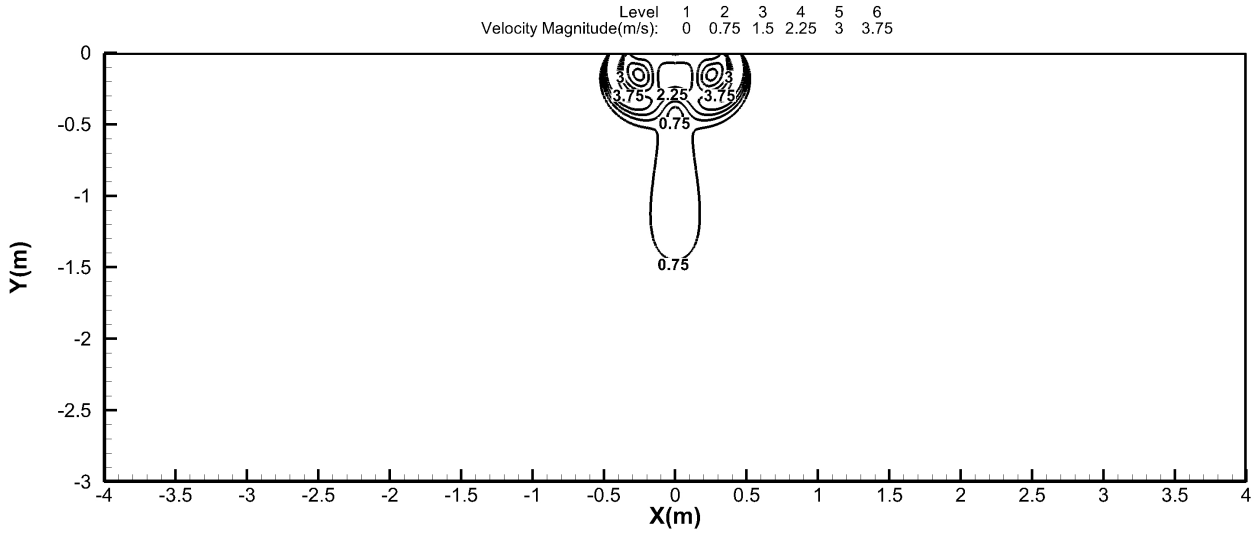

Cooling temperature distributions

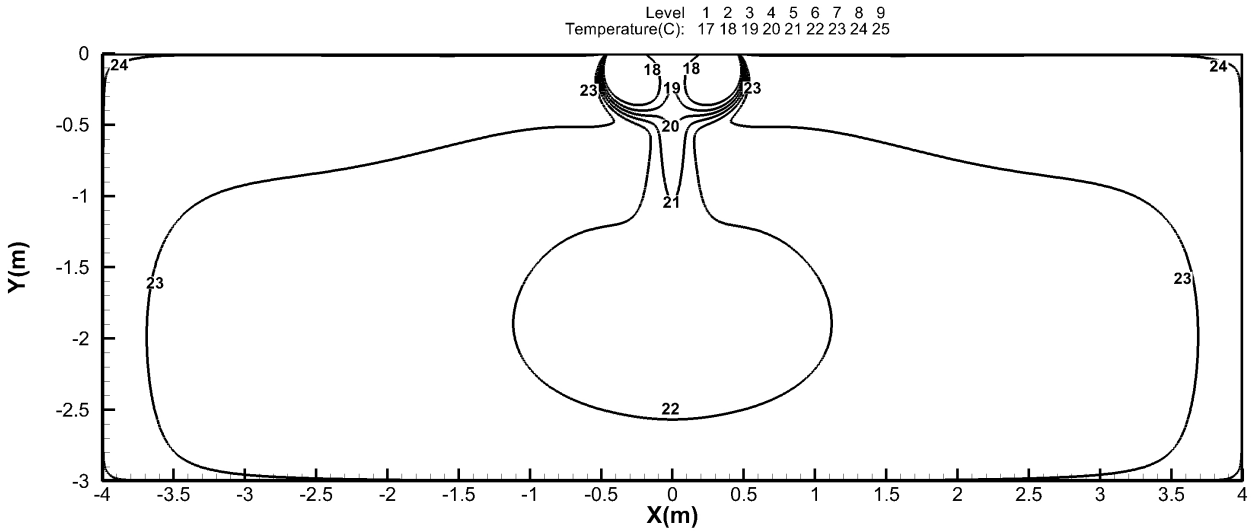

24K

Discharge Angle 60°

Heating airflow velocity distributions

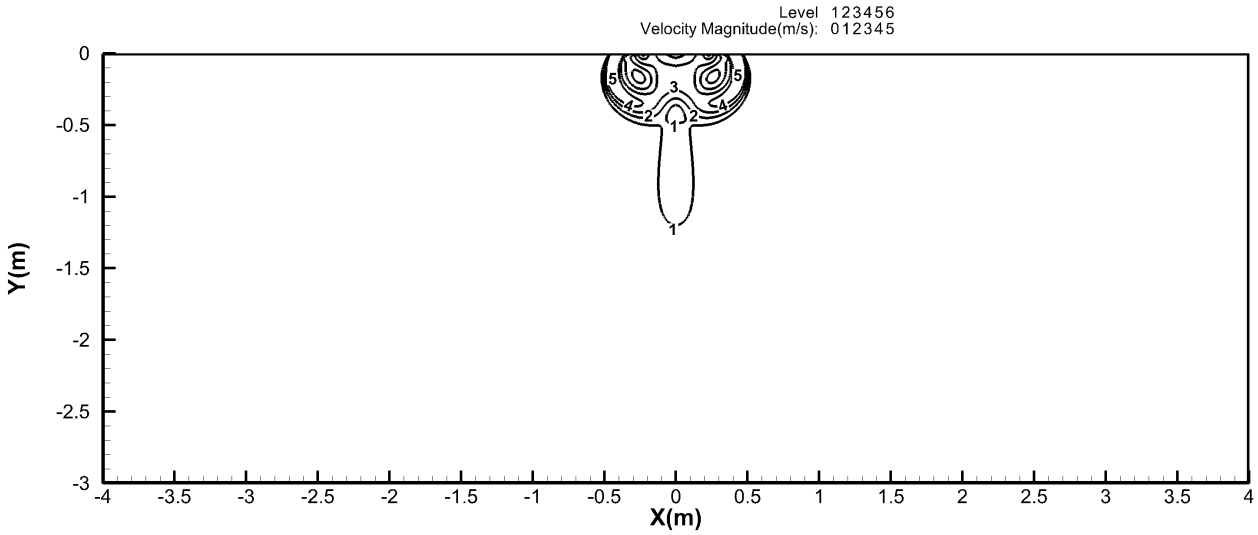

Heating temperature distributions

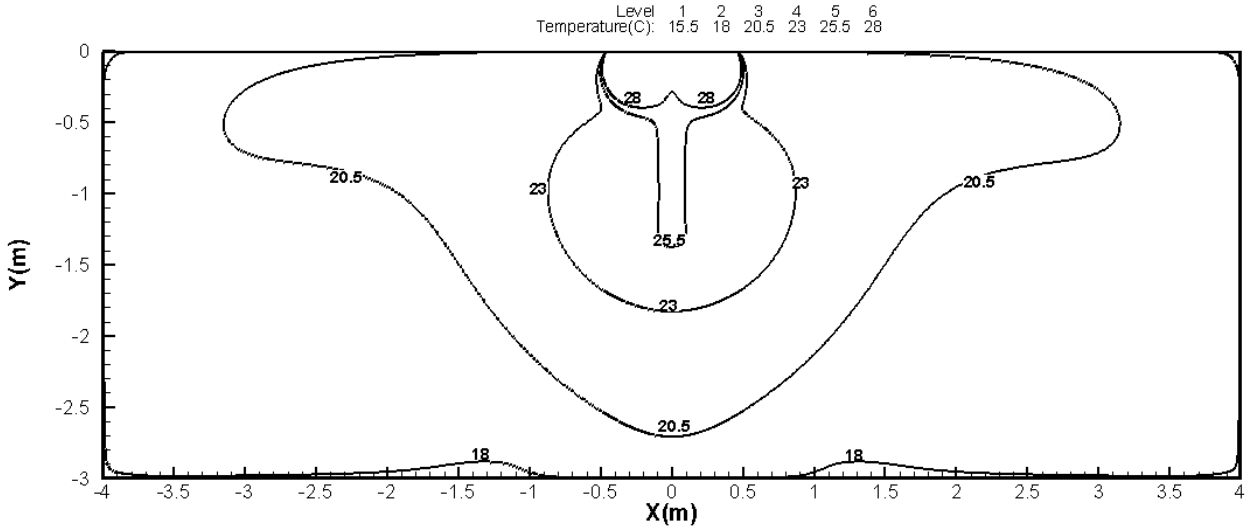

30k

Discharge Angle 30°

Cooling airflow velocity distributions

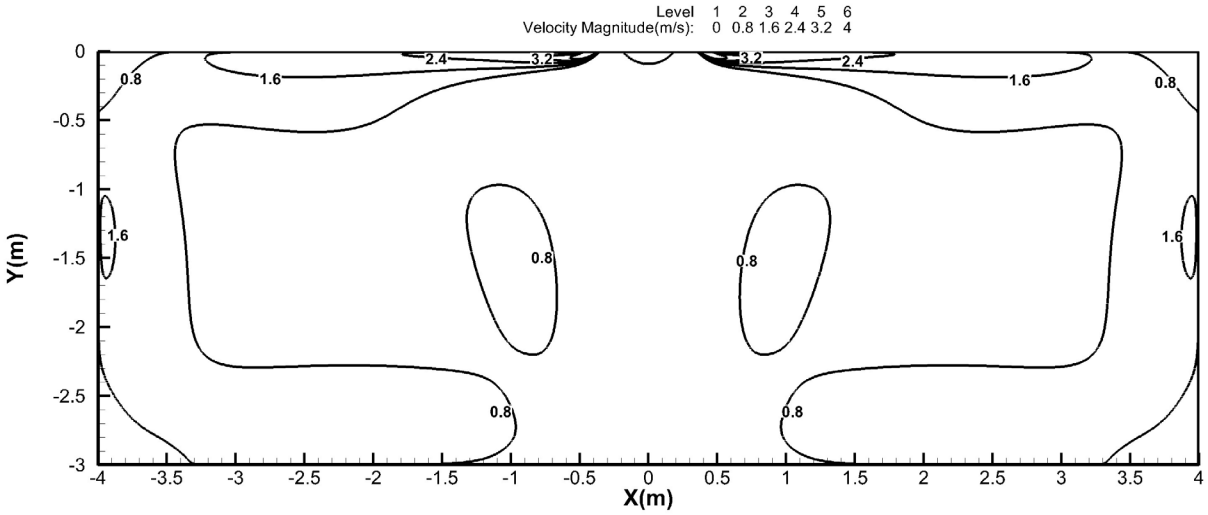

Cooling temperature distributions

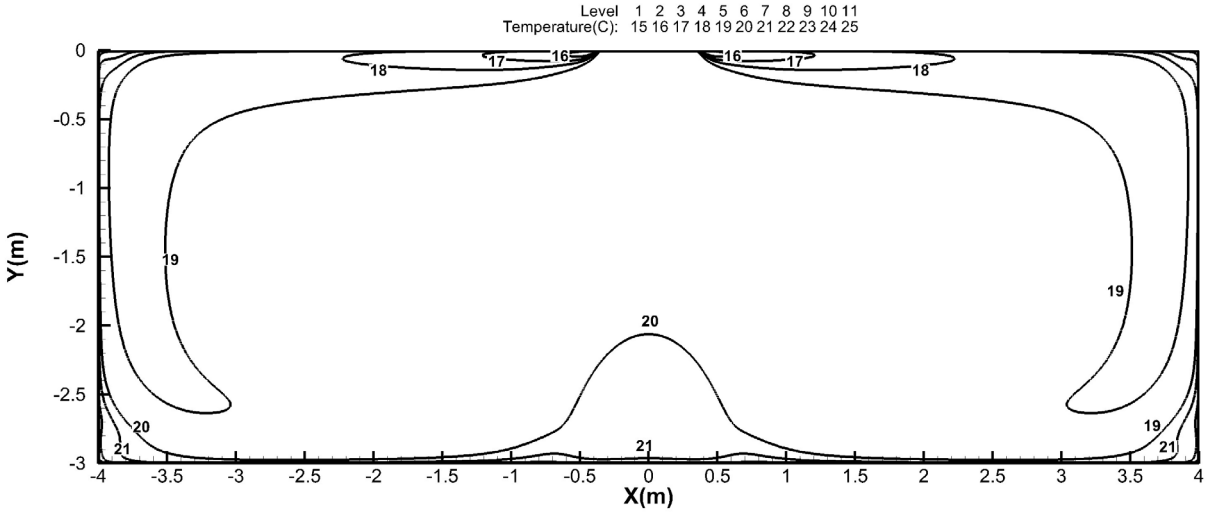

30k

Discharge Angle 30°

Heating airflow velocity distributions

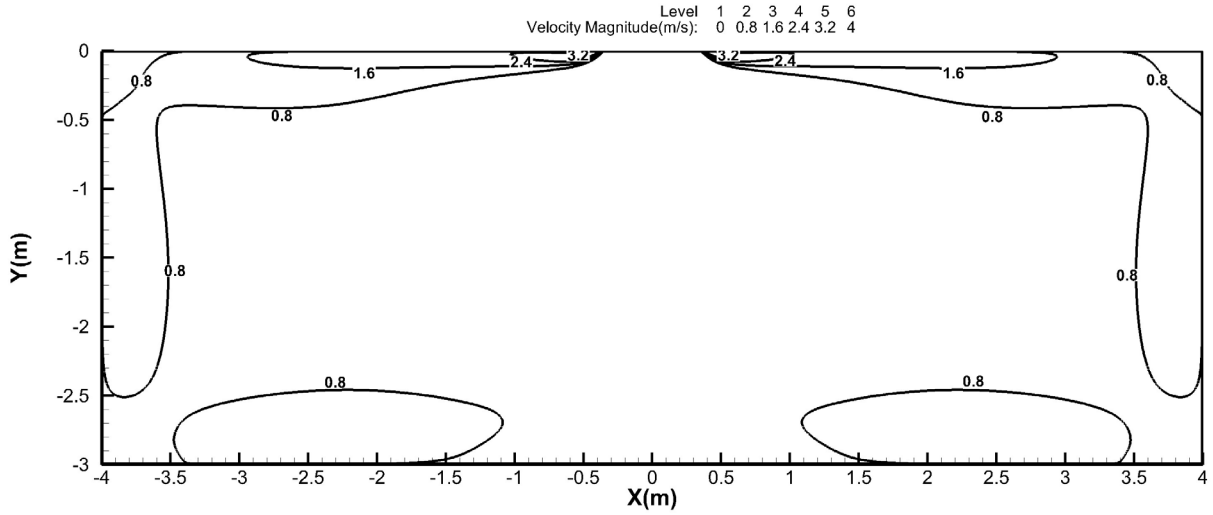

Heating temperature distributions

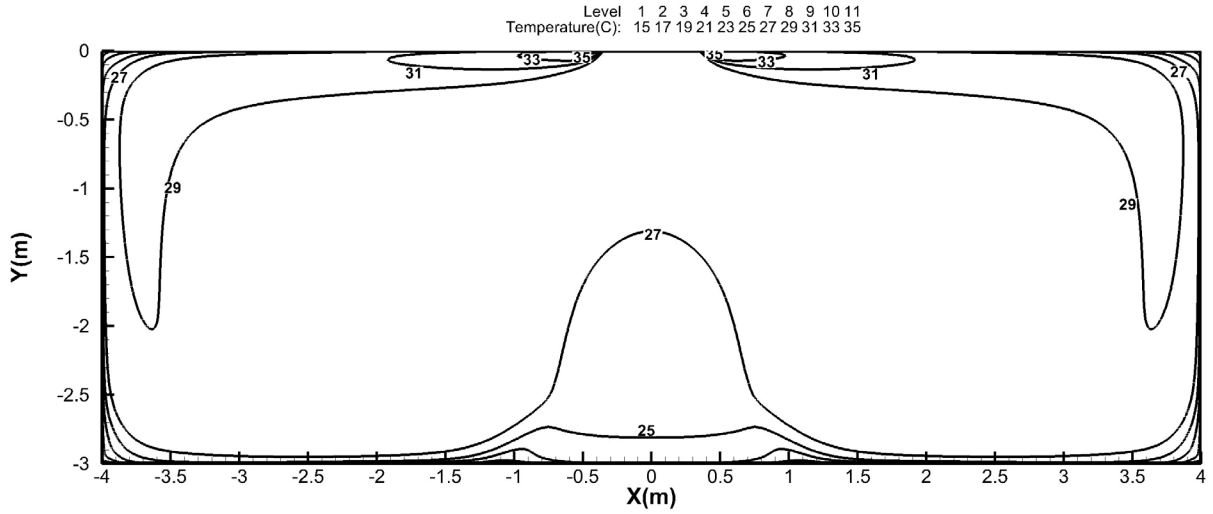

30k

Discharge Angle 60°

Cooling airflow velocity distributions

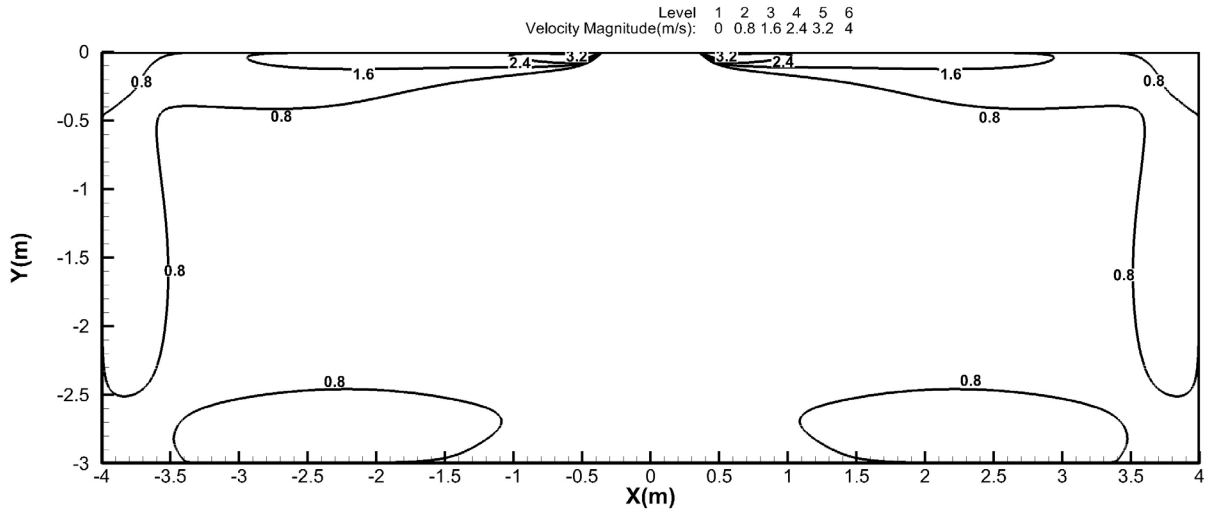

Cooling temperature distributions

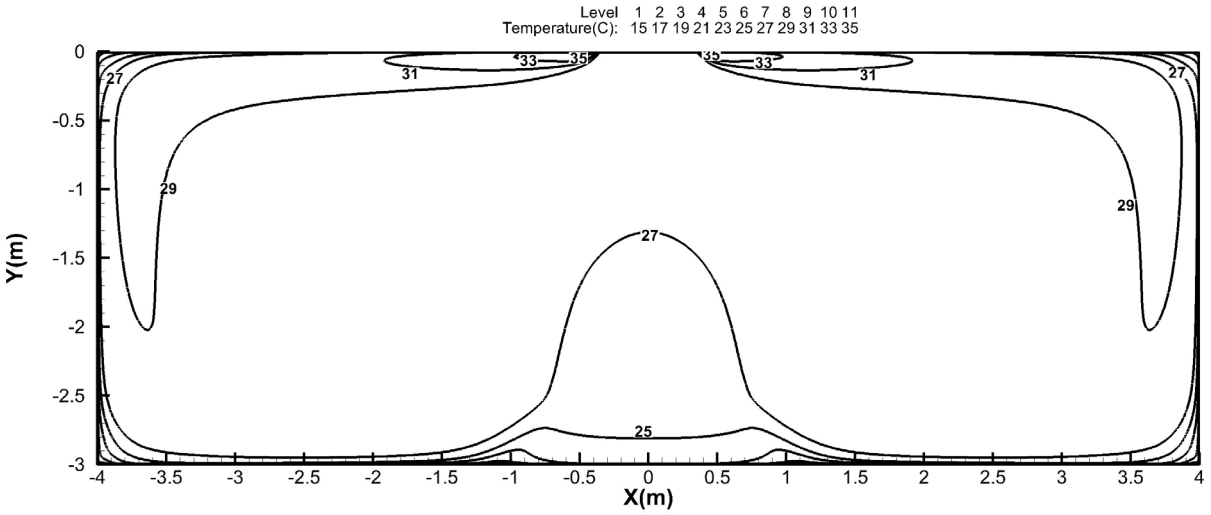

30k

Discharge Angle 60°

Heating airflow velocity distributions

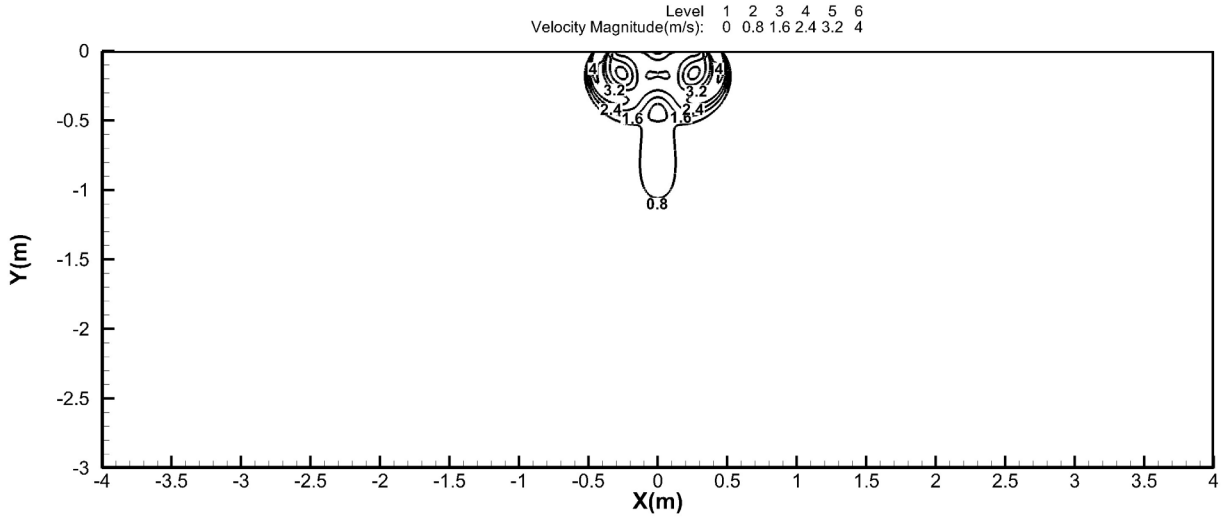

Heating temperature distributions

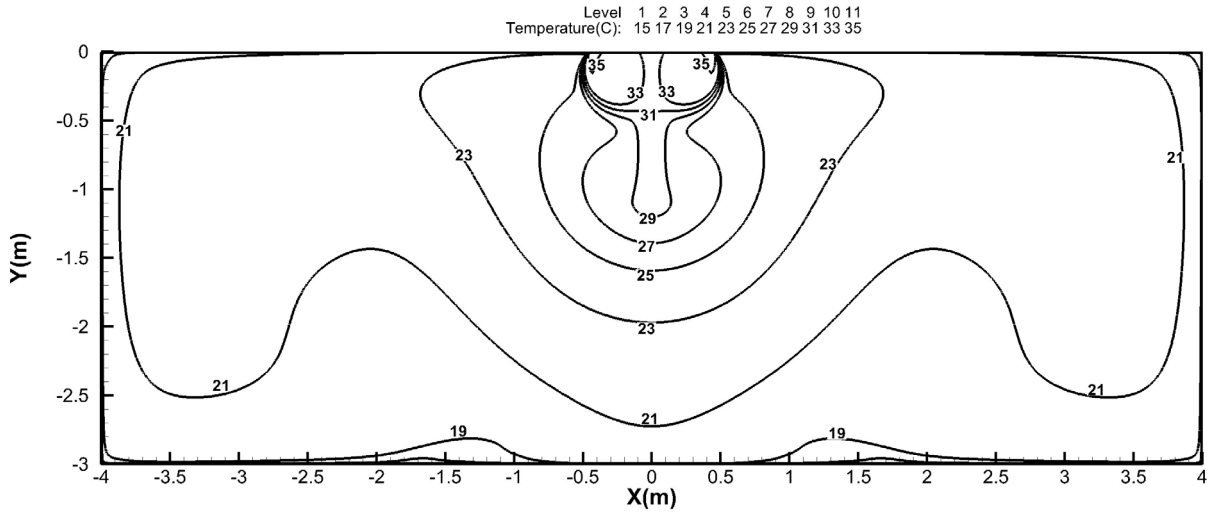

36K

Discharge Angle 30°

Cooling airflow velocity distributions

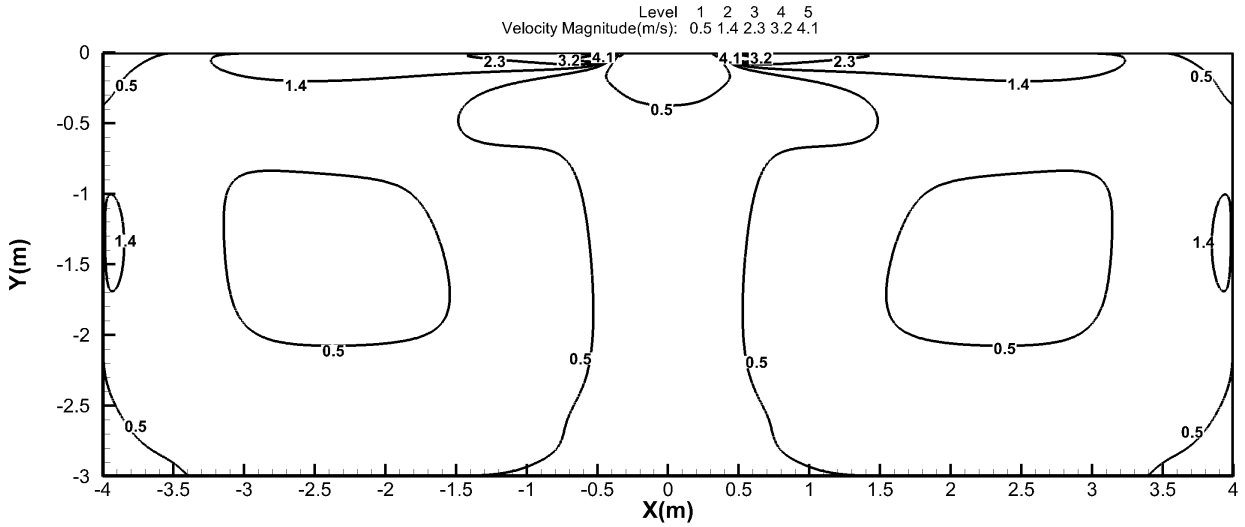

Cooling temperature distributions

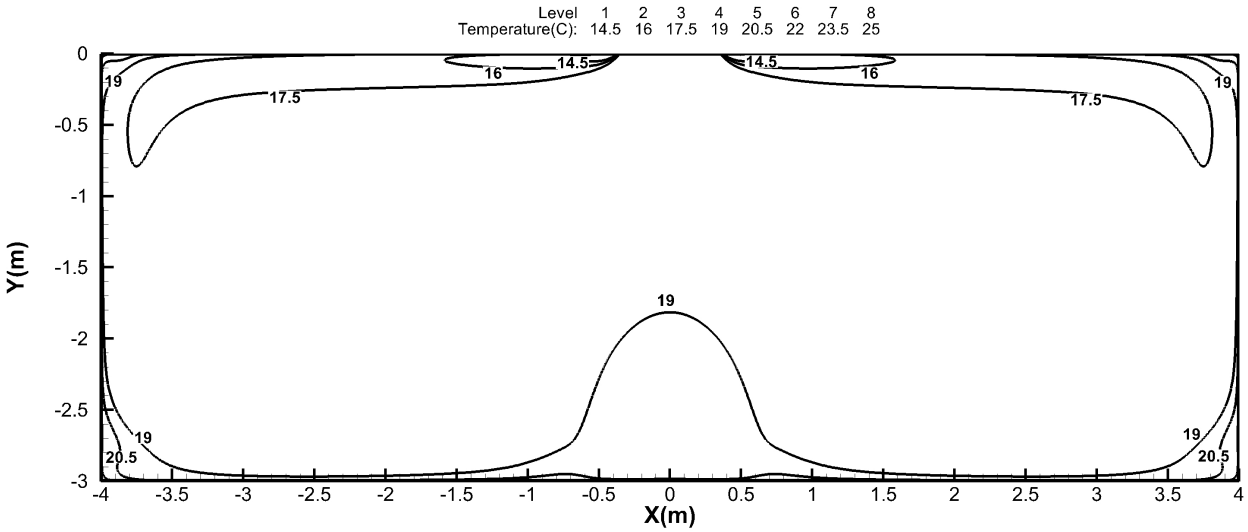

36K

Discharge Angle 30°

Heating airflow velocity distributions

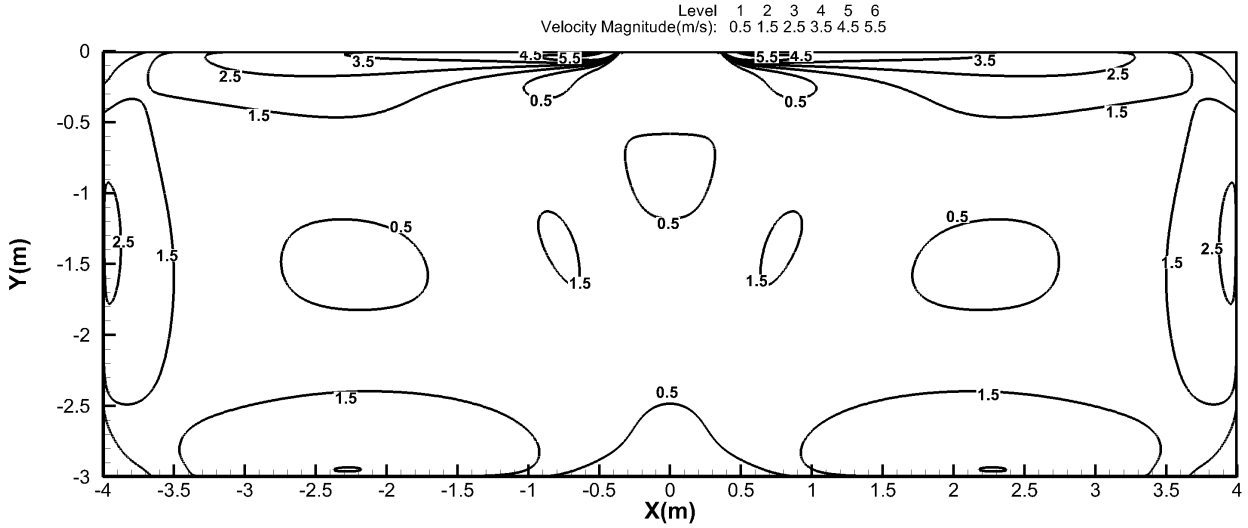

Heating temperature distributions

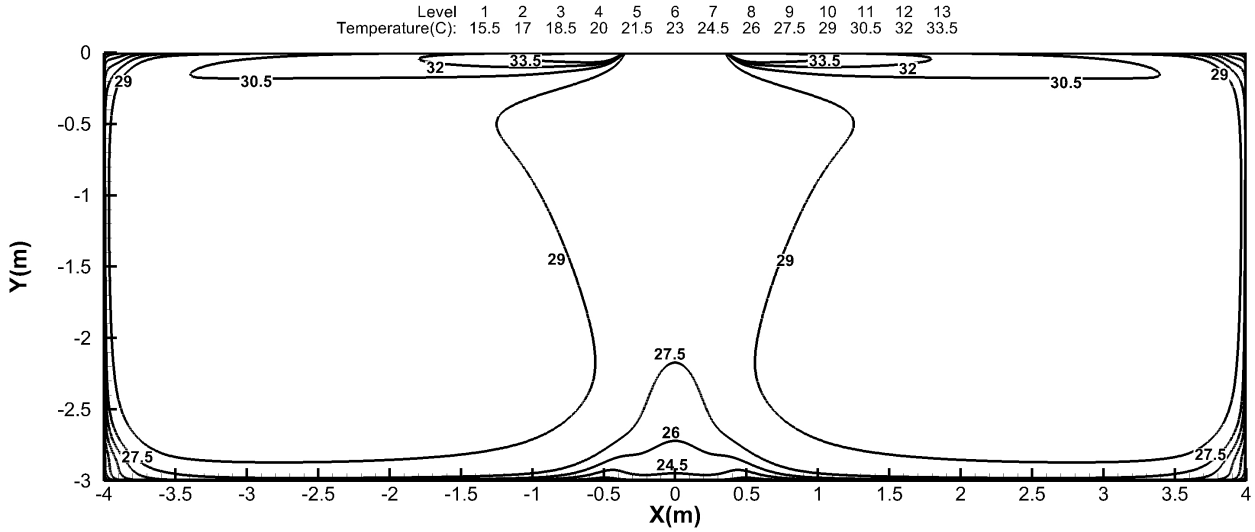

36K

Discharge Angle 60°

Cooling airflow velocity distributions

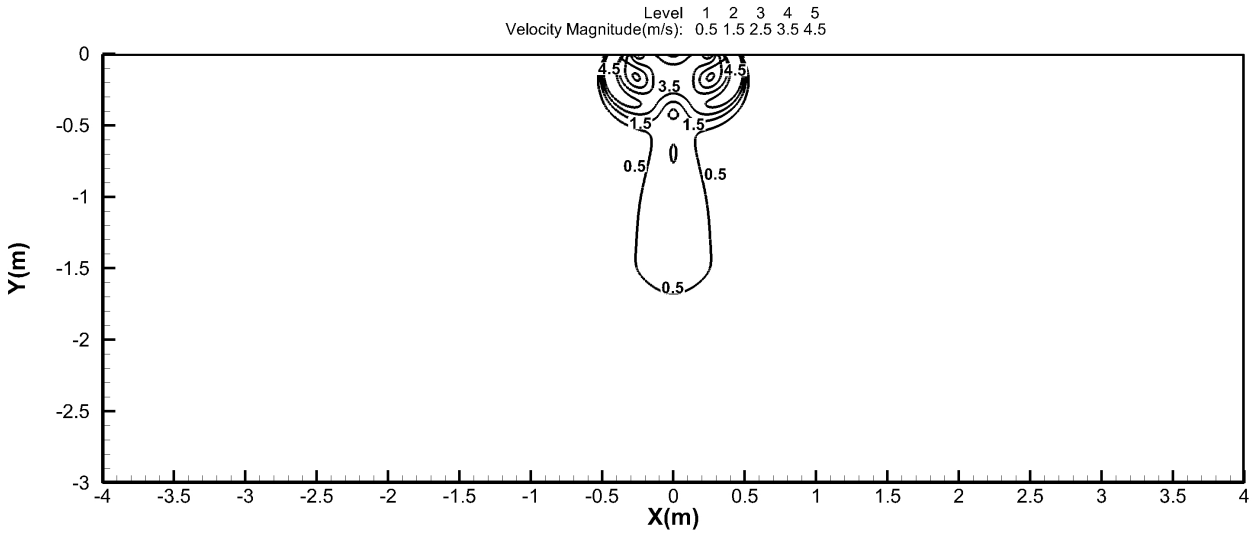

Cooling temperature distributions

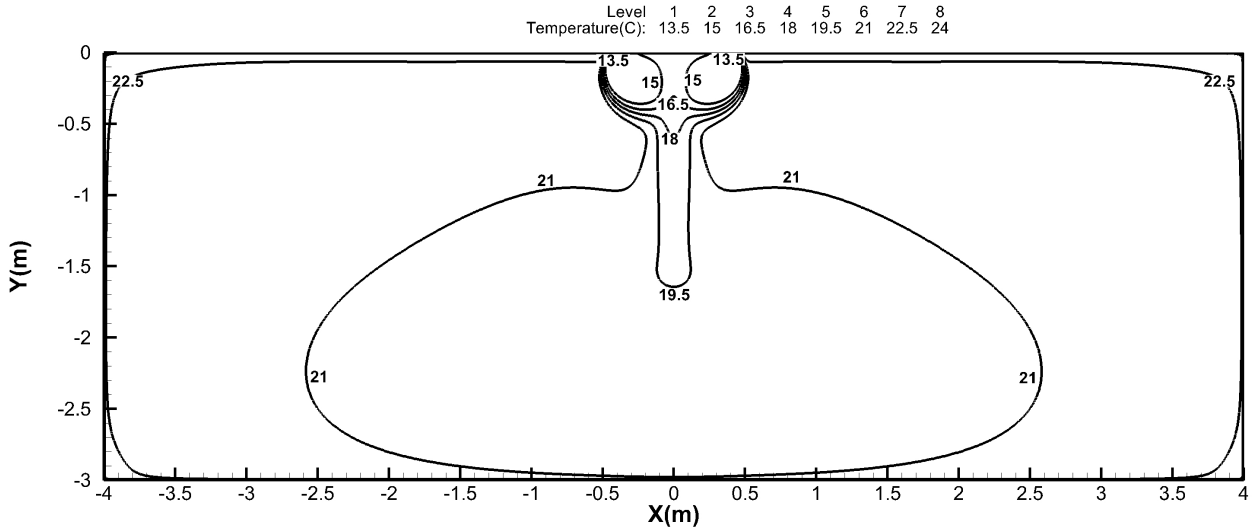

36K

Discharge Angle 60°

Heating airflow velocity distributions

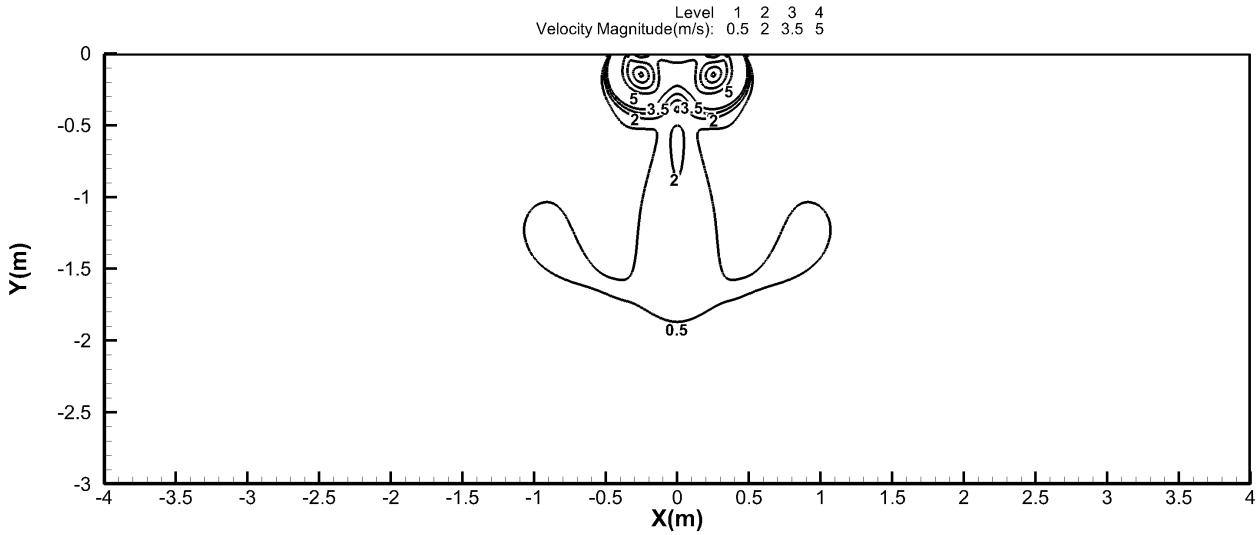

Heating temperature distributions

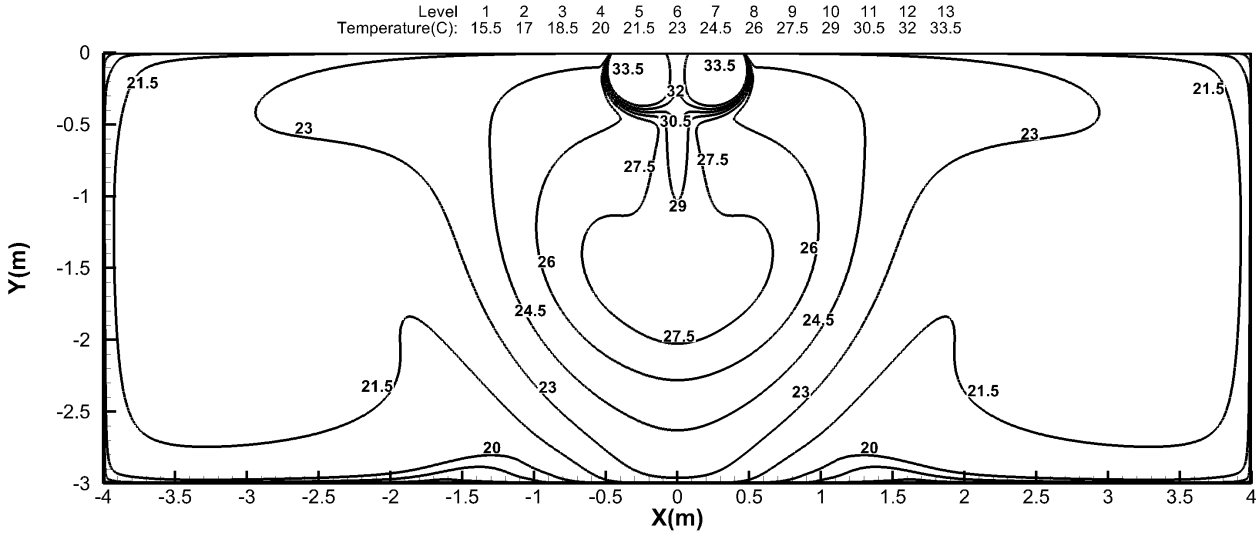

48k

Discharge Angle 30°

Cooling airflow velocity distributions

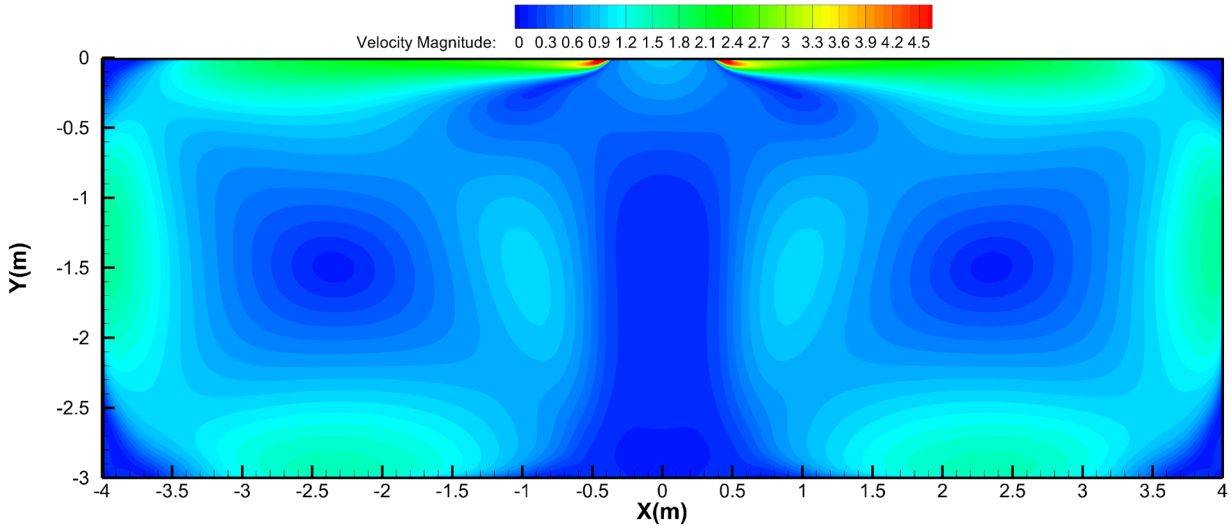

Cooling temperature distributions

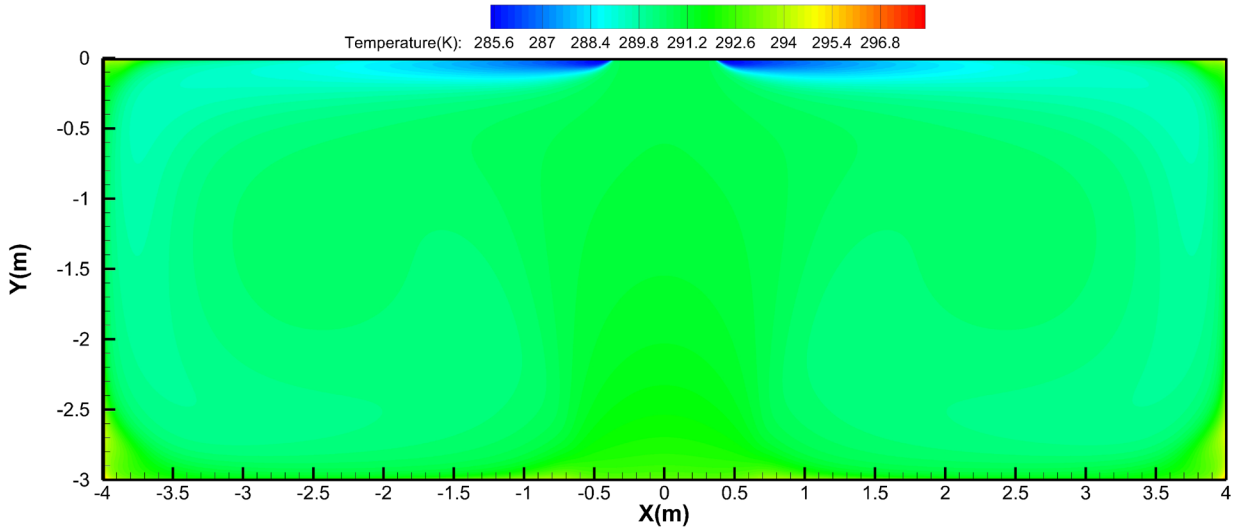

48k

Discharge Angle 30°

Heating airflow velocity distributions

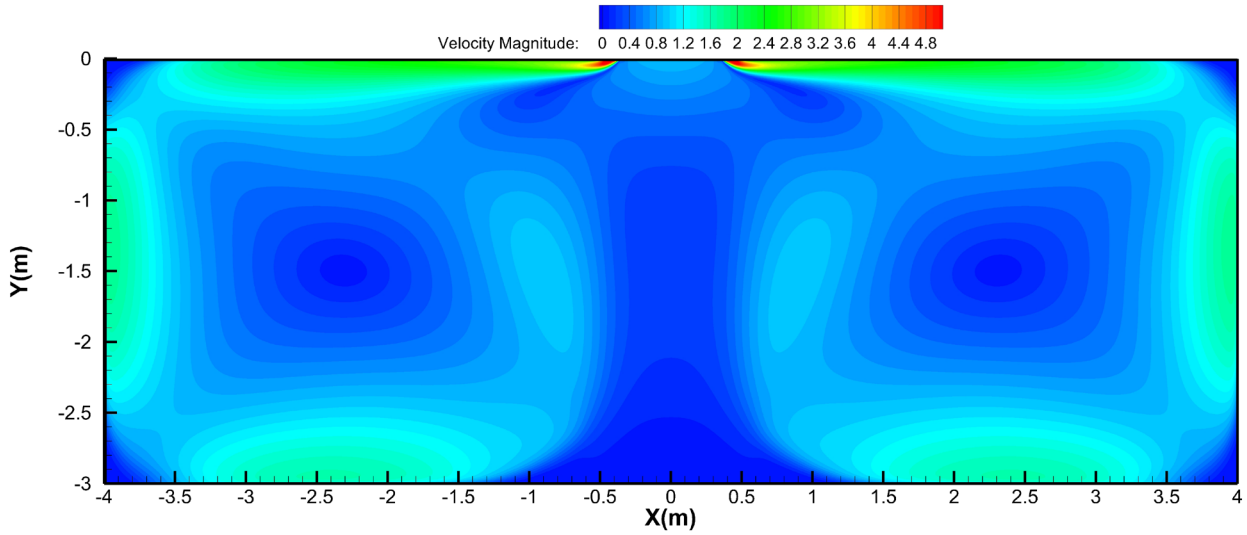

Heating temperature distributions

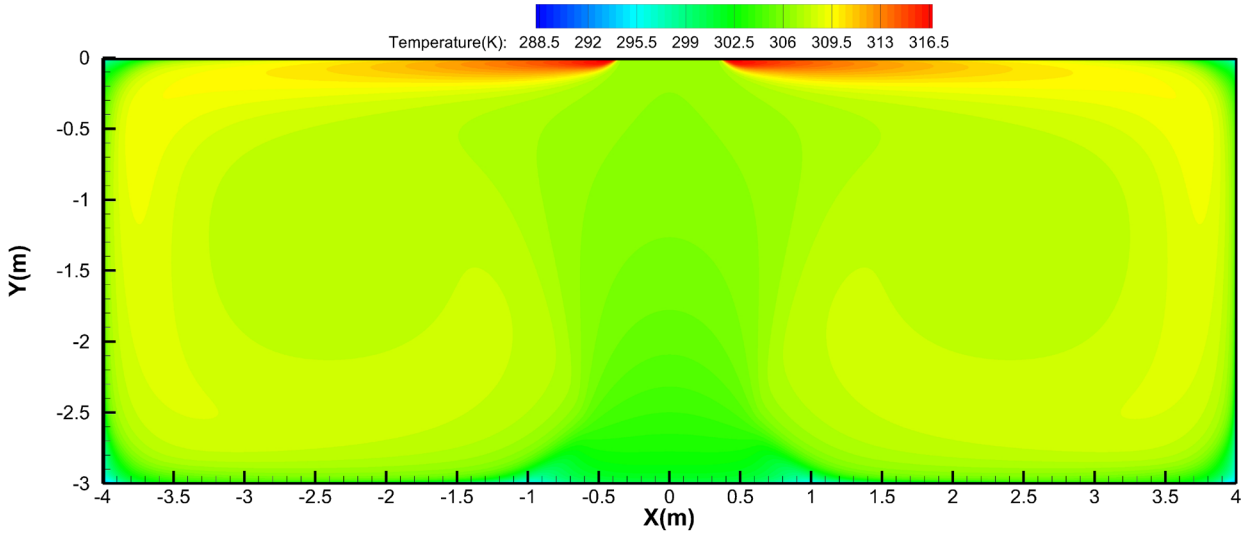

48k

Discharge Angle 60°

Cooling airflow velocity distributions

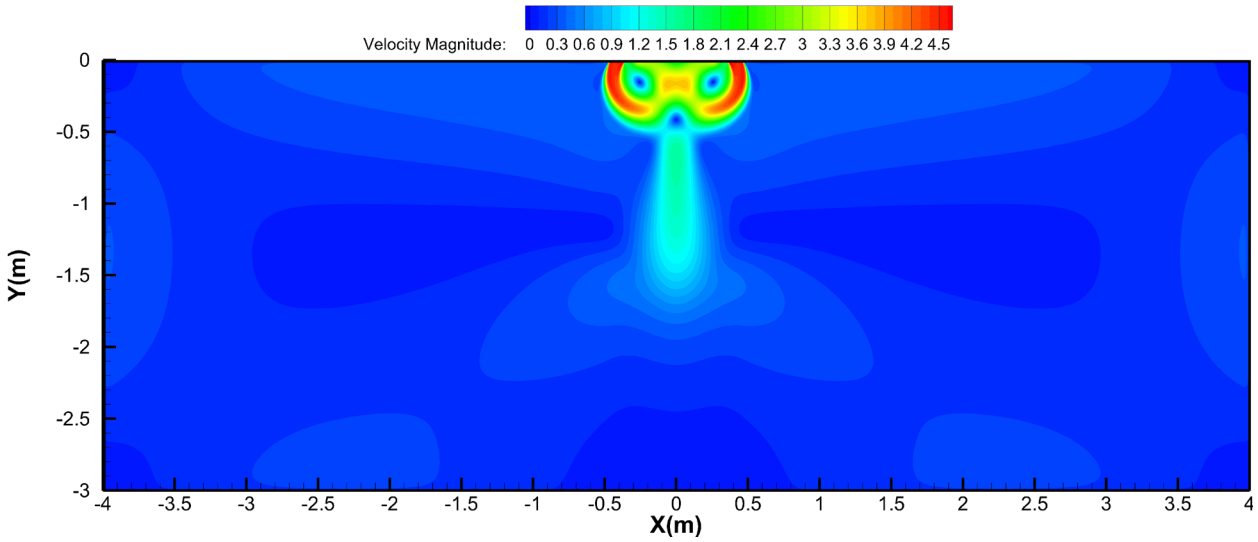

Cooling temperature distributions

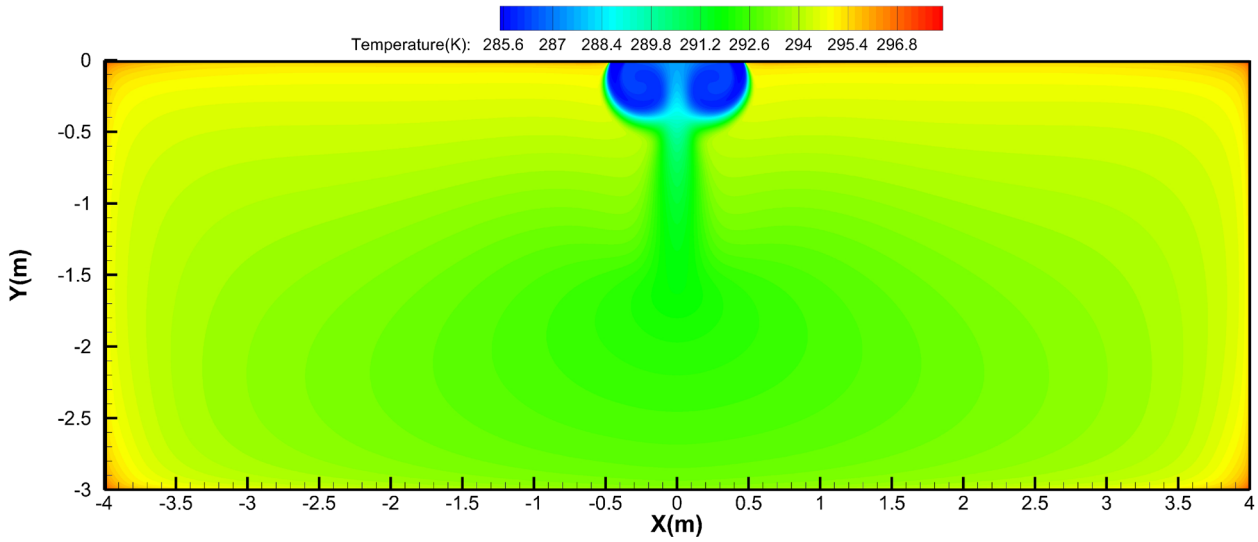

48k

Discharge Angle 60°

Heating airflow velocity distributions

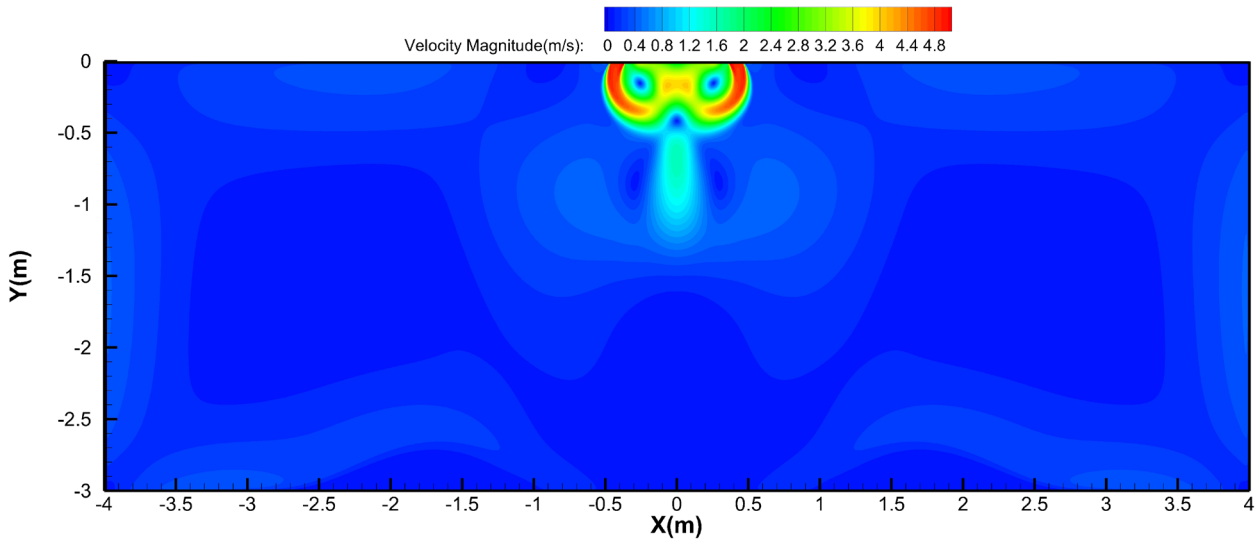

Heating temperature distributions

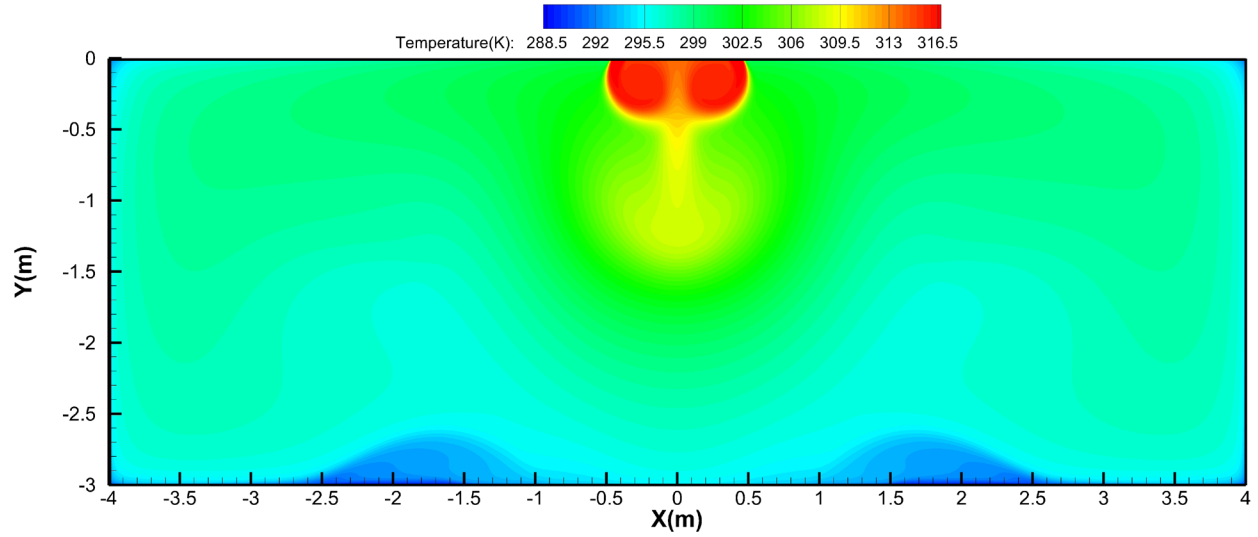

55K

Discharge Angle 30°

Cooling airflow velocity distributions

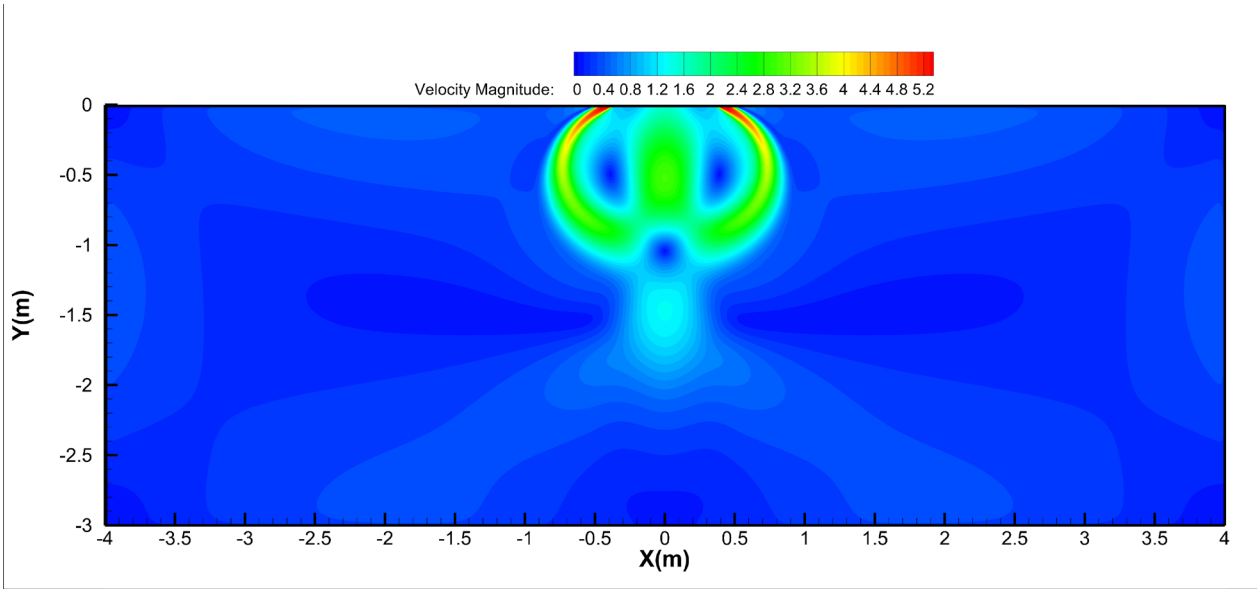

Cooling temperature distributions

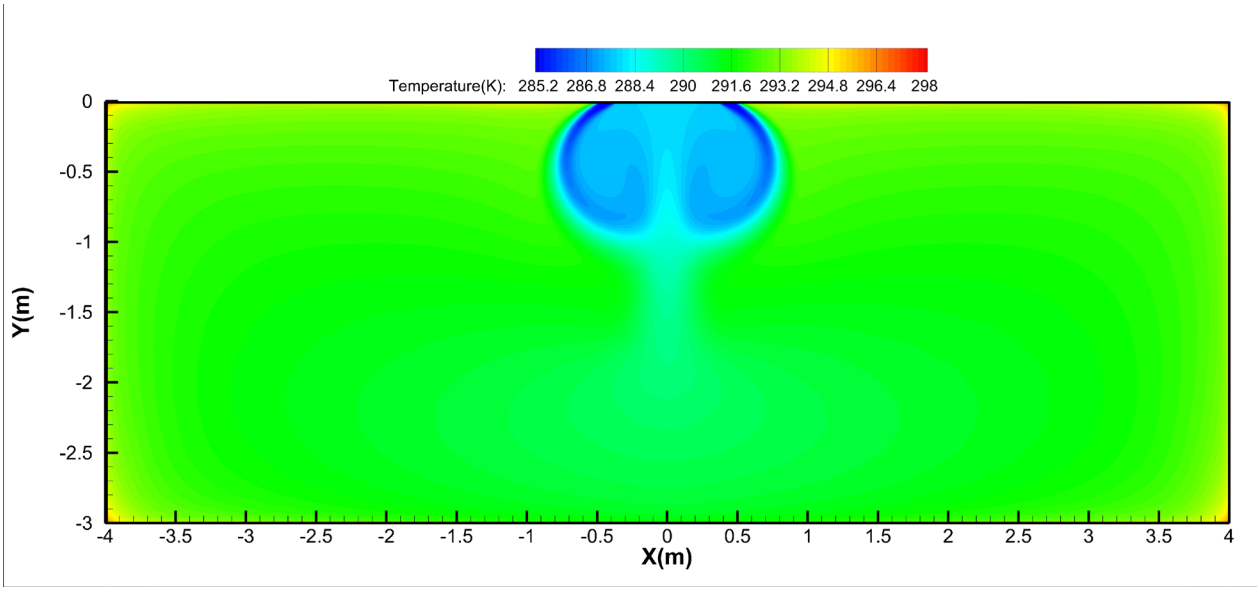

55K

Discharge Angle 30°

Heating airflow velocity distributions

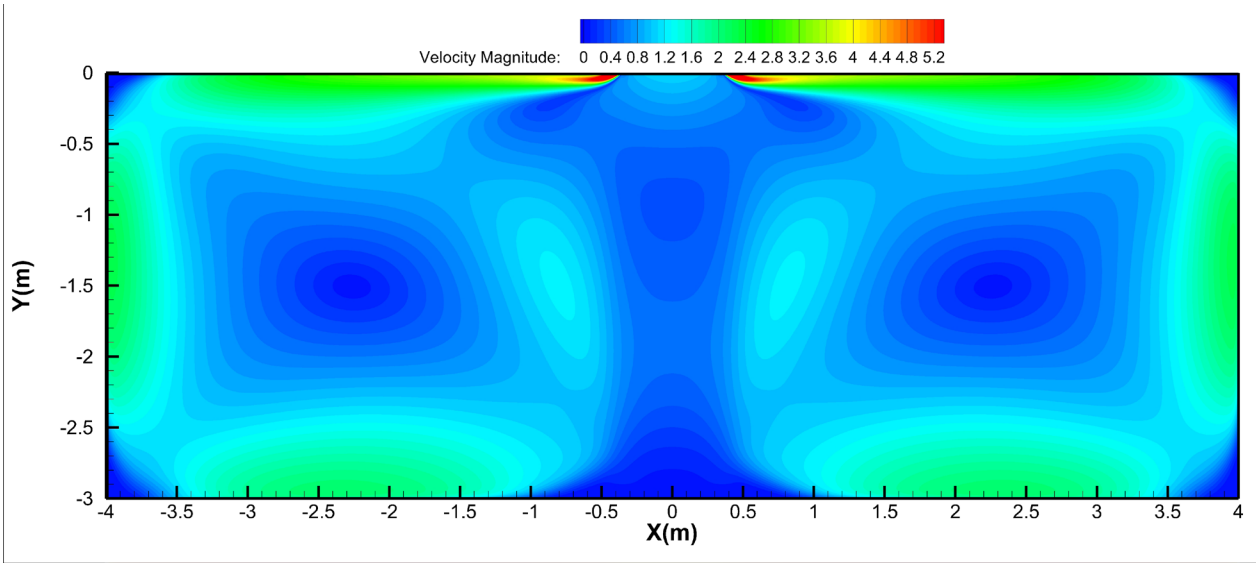

Heating temperature distributions

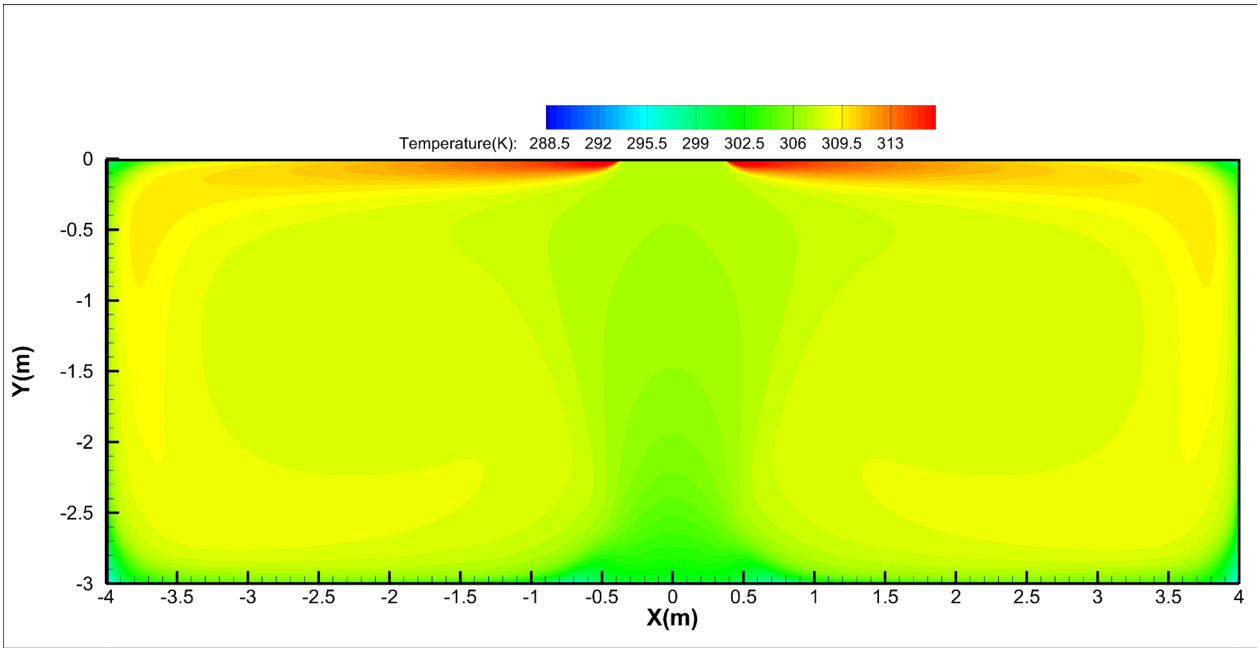

55K

Discharge Angle 60°

Cooling airflow velocity distributions

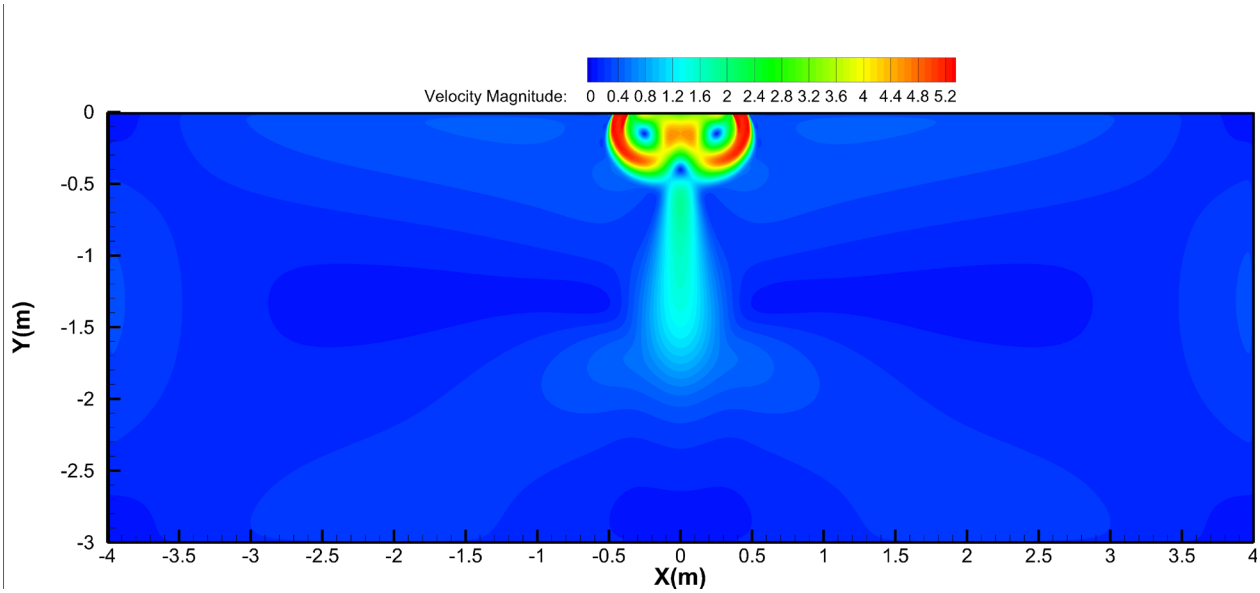

Cooling temperature distributions

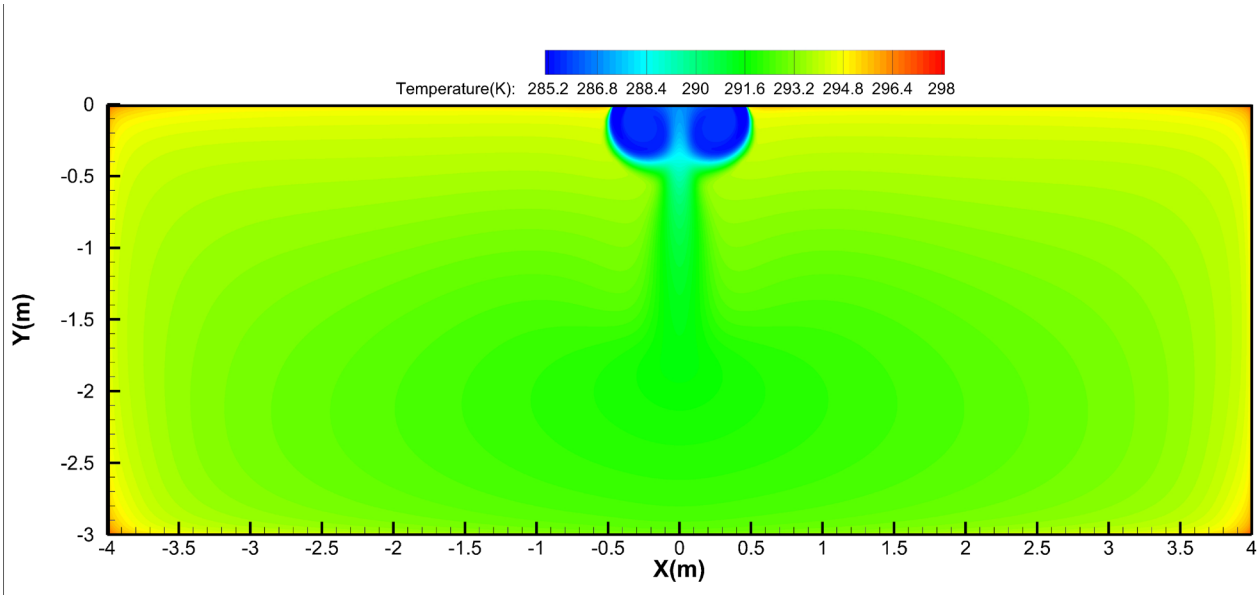

55K

Discharge Angle 60°

Heating airflow velocity distributions

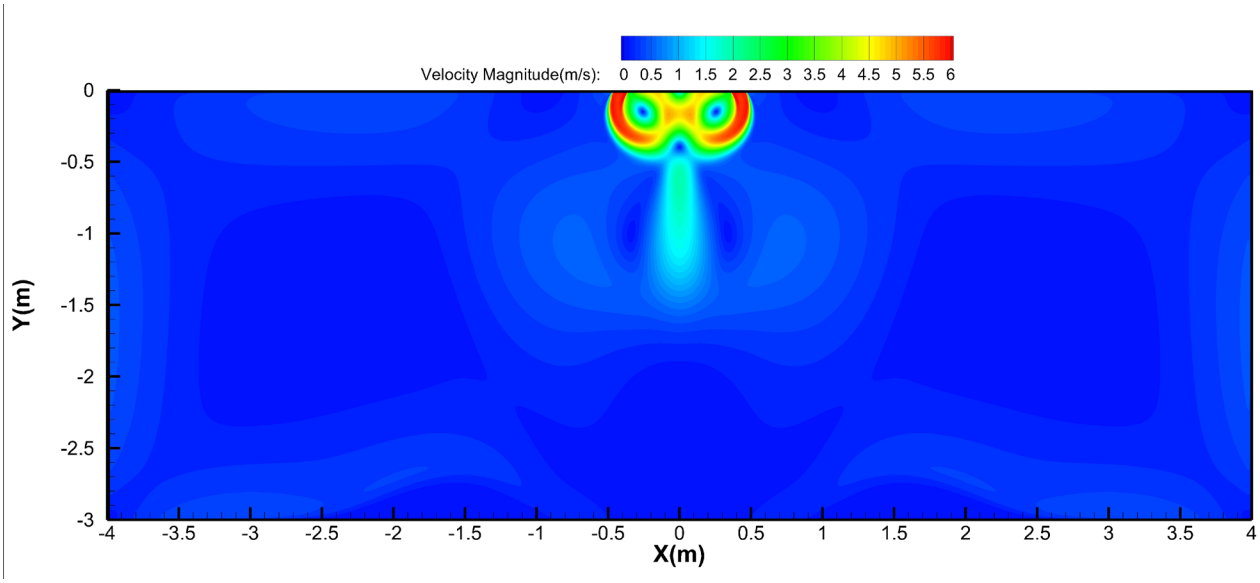

Heating temperature distributions

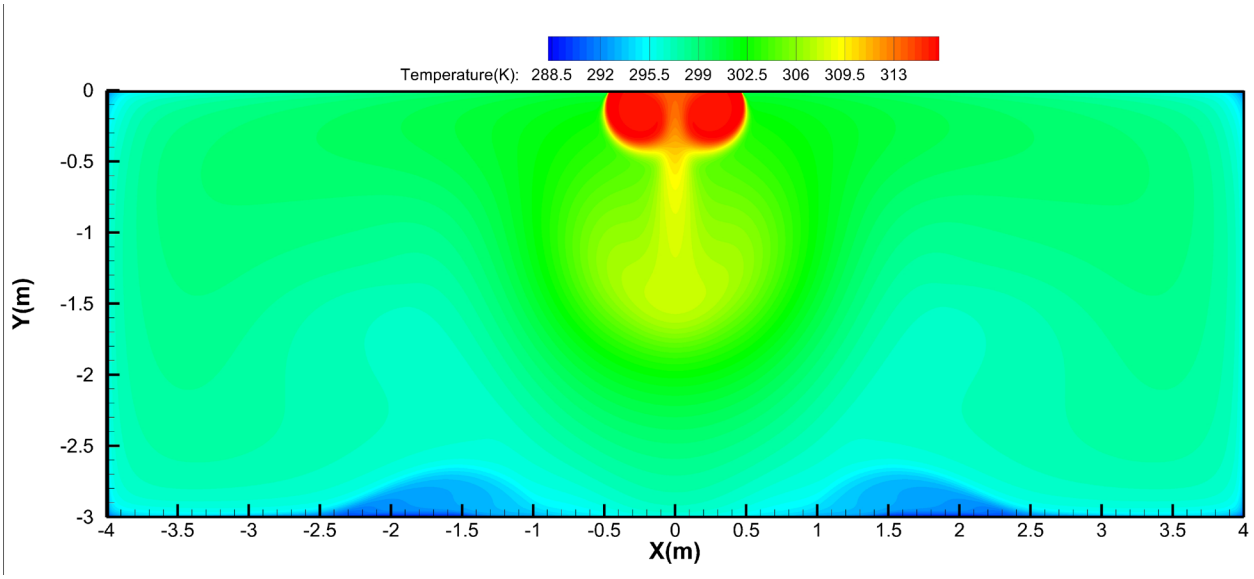

7. Capacity Tables

7.1 Cooling

24k																		
INDOOR AIRFLOW (CMH)	OUTDOOR DB(℃)	ID WB (℃)	16.0				18.0				19.0				22.0			
		ID DB (℃)	23.0	25.0	27.0	29.0	23.0	25.0	27.0	29.0	23.0	25.0	27.0	29.0	23.0	25.0	27.0	29.0
992	-15	TC	7.35	7.34	7.40	7.46	7.73	7.88	7.88	7.97	7.93	7.93	7.93	7.93	8.40	8.40	8.40	8.40
		S/T	0.71	0.80	0.90	0.97	0.57	0.65	0.74	0.83	0.50	0.58	0.67	0.75	0.35	0.42	0.50	0.58
		PI	1.54	1.54	1.54	1.54	1.53	1.53	1.53	1.53	1.54	1.54	1.54	1.54	1.53	1.53	1.53	1.53
	-10	TC	7.31	7.30	7.36	7.42	7.69	7.84	7.84	7.93	7.89	7.89	7.89	7.89	8.37	8.37	8.37	8.37
		S/T	0.72	0.81	0.90	0.97	0.57	0.66	0.75	0.83	0.50	0.58	0.67	0.76	0.35	0.43	0.50	0.58
		PI	1.53	1.53	1.53	1.53	1.53	1.53	1.53	1.53	1.53	1.53	1.53	1.53	1.53	1.53	1.53	1.53
	-5	TC	7.26	7.26	7.32	7.38	7.66	7.81	7.81	7.90	7.86	7.86	7.86	7.86	8.35	8.35	8.35	8.35
		S/T	0.72	0.81	0.91	0.98	0.58	0.66	0.75	0.84	0.51	0.59	0.67	0.76	0.35	0.43	0.51	0.59
		PI	1.53	1.53	1.53	1.53	1.53	1.53	1.53	1.53	1.53	1.53	1.53	1.53	1.53	1.53	1.53	1.53
	0	TC	7.23	7.22	7.28	7.34	7.63	7.78	7.78	7.87	7.84	7.84	7.84	7.84	8.34	8.34	8.34	8.34
		S/T	0.73	0.81	0.91	0.98	0.58	0.66	0.75	0.84	0.51	0.59	0.68	0.76	0.35	0.43	0.51	0.59
		PI	1.54	1.54	1.54	1.54	1.53	1.53	1.53	1.53	1.54	1.54	1.54	1.54	1.54	1.54	1.54	1.54
	5	TC	7.19	7.18	7.24	7.30	7.60	7.75	7.75	7.84	7.82	7.82	7.82	7.82	8.34	8.34	8.34	8.34
		S/T	0.73	0.82	0.92	0.99	0.58	0.67	0.76	0.85	0.51	0.59	0.68	0.77	0.35	0.43	0.51	0.59
		PI	1.55	1.55	1.55	1.55	1.55	1.55	1.55	1.55	1.55	1.55	1.55	1.55	1.55	1.55	1.55	1.55
	10	TC	7.15	7.14	7.20	7.26	7.56	7.71	7.71	7.80	7.79	7.79	7.79	7.79	8.31	8.31	8.31	8.31
		S/T	0.73	0.82	0.92	0.99	0.58	0.67	0.76	0.85	0.51	0.59	0.68	0.77	0.36	0.44	0.51	0.59
		PI	1.58	1.58	1.58	1.58	1.57	1.57	1.57	1.57	1.57	1.57	1.57	1.57	1.57	1.57	1.57	1.57
	15	TC	7.09	7.08	7.14	7.20	7.51	7.66	7.66	7.75	7.74	7.74	7.74	7.74	8.28	8.28	8.28	8.28
		S/T	0.74	0.83	0.93	1.00	0.59	0.67	0.77	0.86	0.52	0.60	0.69	0.78	0.36	0.44	0.52	0.60
		PI	1.61	1.62	1.62	1.62	1.61	1.61	1.61	1.61	1.61	1.61	1.61	1.61	1.61	1.61	1.61	1.61
	20	TC	7.01	7.00	7.06	7.12	7.43	7.43	7.43	7.43	7.66	7.66	7.66	7.66	8.21	8.21	8.21	8.21
		S/T	0.74	0.83	0.93	1.00	0.59	0.68	0.77	0.86	0.52	0.60	0.69	0.78	0.36	0.44	0.52	0.60
		PI	1.67	1.67	1.67	1.67	1.66	1.66	1.66	1.66	1.66	1.66	1.66	1.66	1.65	1.65	1.65	1.65
	25	TC	6.69	6.69	6.74	6.80	7.09	7.09	7.09	7.09	7.32	7.32	7.32	7.32	7.86	7.86	7.86	7.86
		S/T	0.75	0.85	0.94	1.00	0.59	0.69	0.78	0.87	0.52	0.61	0.70	0.79	0.35	0.44	0.52	0.61
		PI	1.84	1.84	1.84	1.84	1.84	1.84	1.84	1.84	1.84	1.84	1.84	1.84	1.84	1.84	1.84	1.84
	30	TC	6.37	6.37	6.43	6.49	6.77	6.77	6.77	6.83	6.97	6.97	6.97	6.97	7.52	7.52	7.52	7.52
		S/T	0.76	0.86	0.97	1.00	0.60	0.70	0.79	0.89	0.52	0.62	0.71	0.81	0.35	0.44	0.53	0.61
		PI	2.02	2.02	2.02	2.02	2.03	2.03	2.03	2.03	2.03	2.03	2.03	2.03	2.04	2.04	2.04	2.04
	35	TC	6.06	6.06	6.11	6.17	6.43	6.43	6.43	6.49	6.63	6.63	6.74	6.63	7.17	7.17	7.17	7.17
		S/T	0.77	0.88	0.99	1.00	0.60	0.71	0.81	0.91	0.53	0.63	0.72	0.83	0.35	0.44	0.53	0.62
		PI	2.20	2.20	2.20	2.20	2.21	2.21	2.21	2.21	2.22	2.22	2.22	2.22	2.23	2.23	2.23	2.23
	40	TC	5.66	5.68	5.74	5.80	6.01	6.01	6.01	6.07	6.21	6.21	6.28	6.21	6.72	6.72	6.72	6.72
		S/T	0.80	0.92	1.00	1.00	0.62	0.73	0.85	0.95	0.53	0.64	0.75	0.86	0.34	0.44	0.54	0.64
		PI	2.43	2.43	2.43	2.43	2.44	2.44	2.44	2.44	2.45	2.45	2.45	2.45	2.47	2.47	2.47	2.47
	46	TC	5.24	5.29	5.35	5.41	5.58	5.58	5.58	5.64	5.78	5.78	5.78	5.78	6.23	6.23	6.23	6.23
		S/T	0.81	0.94	1.00	1.00	0.63	0.74	0.86	0.97	0.54	0.65	0.77	0.88	0.34	0.44	0.55	0.66
		PI	2.71	2.71	2.71	2.71	2.72	2.72	2.72	2.72	2.73	2.73	2.73	2.73	2.75	2.75	2.75	2.75
	50	TC	4.90	4.95	5.01	5.07	5.24	5.24	5.29	5.35	5.44	5.44	5.44	5.49	5.89	5.89	5.89	5.89
		S/T	0.84	0.97	1.00	1.00	0.64	0.76	0.88	1.00	0.54	0.66	0.79	0.90	0.33	0.45	0.56	0.67
		PI	2.94	2.94	2.94	2.94	2.95	2.95	2.95	2.95	2.96	2.96	2.96	2.96	2.98	2.98	2.98	2.98

1118	-15	TC	7.50	7.50	7.56	7.65	7.88	7.88	7.88	7.97	8.09	8.09	8.09	8.09	8.58	8.58	8.58	8.58
		S/T	0.73	0.84	0.98	1.00	0.58	0.68	0.77	0.86	0.50	0.60	0.69	0.78	0.34	0.42	0.51	0.60
		PI	1.58	1.58	1.58	1.58	1.57	1.57	1.57	1.57	1.57	1.57	1.57	1.57	1.57	1.57	1.57	1.57
	-10	TC	7.45	7.45	7.51	7.60	7.84	7.84	7.84	7.93	8.05	8.05	8.05	8.05	8.55	8.55	8.55	8.55
		S/T	0.74	0.84	0.99	1.00	0.58	0.68	0.78	0.86	0.50	0.60	0.69	0.79	0.34	0.43	0.51	0.60
		PI	1.57	1.57	1.57	1.57	1.57	1.57	1.57	1.57	1.57	1.57	1.57	1.57	1.57	1.57	1.57	1.57
	-5	TC	7.41	7.41	7.47	7.56	7.81	7.81	7.81	7.90	8.02	8.02	8.02	8.02	8.53	8.53	8.53	8.53
		S/T	0.74	0.85	0.99	1.00	0.59	0.68	0.78	0.87	0.51	0.60	0.69	0.79	0.34	0.43	0.52	0.60
		PI	1.57	1.57	1.57	1.57	1.57	1.57	1.57	1.57	1.57	1.57	1.57	1.57	1.57	1.57	1.57	1.57
	0	TC	7.37	7.37	7.43	7.52	7.78	7.78	7.78	7.87	7.99	7.99	7.99	7.99	8.52	8.52	8.52	8.52
		S/T	0.74	0.85	1.00	1.00	0.59	0.69	0.78	0.87	0.51	0.61	0.70	0.79	0.34	0.43	0.52	0.61
		PI	1.57	1.57	1.57	1.57	1.57	1.57	1.57	1.57	1.58	1.58	1.58	1.58	1.58	1.58	1.58	1.58
	5	TC	7.33	7.33	7.39	7.48	7.75	7.75	7.75	7.84	7.97	7.97	7.97	7.97	8.51	8.51	8.51	8.51
		S/T	0.75	0.86	1.00	1.00	0.59	0.69	0.79	0.88	0.51	0.61	0.70	0.80	0.34	0.43	0.52	0.61
		PI	1.59	1.59	1.59	1.59	1.59	1.59	1.59	1.59	1.59	1.59	1.59	1.59	1.59	1.59	1.59	1.59
	10	TC	7.29	7.29	7.35	7.44	7.71	7.71	7.71	7.80	7.93	7.93	7.93	7.93	8.49	8.49	8.49	8.49
		S/T	0.75	0.86	1.00	1.00	0.59	0.69	0.79	0.88	0.51	0.61	0.70	0.80	0.35	0.44	0.52	0.61
		PI	1.62	1.62	1.62	1.62	1.61	1.61	1.61	1.61	1.61	1.61	1.61	1.61	1.61	1.61	1.61	1.61
	15	TC	7.23	7.23	7.29	7.38	7.66	7.66	7.66	7.75	7.89	7.89	7.89	7.89	8.46	8.46	8.46	8.46
		S/T	0.76	0.87	0.97	1.00	0.60	0.70	0.80	0.89	0.52	0.62	0.71	0.81	0.35	0.44	0.53	0.62
		PI	1.66	1.66	1.66	1.66	1.65	1.65	1.65	1.65	1.65	1.65	1.65	1.65	1.64	1.64	1.64	1.64
	20	TC	7.15	7.15	7.21	7.29	7.58	7.58	7.58	7.67	7.81	7.81	7.81	7.81	8.38	8.38	8.38	8.38
		S/T	0.76	0.87	0.97	1.00	0.60	0.70	0.80	0.89	0.52	0.62	0.71	0.81	0.35	0.44	0.53	0.62
		PI	1.71	1.71	1.71	1.71	1.70	1.70	1.70	1.70	1.70	1.70	1.70	1.70	1.69	1.69	1.69	1.69
	25	TC	6.83	6.83	6.89	6.95	7.26	7.26	7.26	7.35	7.46	7.46	7.46	7.46	8.04	8.04	8.04	8.04
		S/T	0.77	0.88	0.99	1.00	0.60	0.71	0.81	0.91	0.53	0.63	0.73	0.83	0.35	0.44	0.53	0.63
		PI	1.88	1.88	1.88	1.88	1.88	1.88	1.88	1.88	1.88	1.88	1.88	1.88	1.88	1.88	1.88	1.88
	30	TC	6.52	6.57	6.63	6.69	6.92	6.92	6.92	6.98	7.12	7.12	7.12	7.12	7.69	7.69	7.69	7.69
		S/T	0.79	0.90	1.00	1.00	0.61	0.72	0.83	0.93	0.53	0.64	0.74	0.85	0.34	0.44	0.54	0.64
		PI	2.07	2.07	2.07	2.07	2.07	2.07	2.07	2.07	2.07	2.07	2.07	2.07	2.08	2.08	2.08	2.08
	35	TC	6.17	6.23	6.29	6.34	6.57	6.57	6.57	6.63	6.78	6.78	6.89	6.78	7.32	7.32	7.32	7.32
		S/T	0.80	0.92	1.00	1.00	0.62	0.73	0.85	0.96	0.53	0.64	0.75	0.87	0.34	0.44	0.54	0.65
		PI	2.25	2.25	2.25	2.25	2.26	2.26	2.26	2.26	2.27	2.27	2.27	2.27	2.27	2.27	2.27	2.27
	40	TC	5.83	5.89	5.95	6.00	6.21	6.21	6.23	6.29	6.41	6.41	6.47	6.43	6.93	6.93	6.93	6.93
		S/T	0.83	0.96	1.00	1.00	0.64	0.76	0.88	1.00	0.54	0.66	0.79	0.90	0.33	0.45	0.56	0.67
		PI	2.49	2.49	2.49	2.49	2.50	2.50	2.50	2.50	2.51	2.51	2.51	2.51	2.52	2.52	2.52	2.52
	46	TC	5.41	5.46	5.52	5.58	5.75	5.75	5.81	5.87	5.95	5.95	5.95	6.01	6.44	6.44	6.44	6.44
		S/T	0.85	0.98	1.00	1.00	0.64	0.77	0.90	1.00	0.55	0.67	0.80	0.92	0.33	0.45	0.56	0.68
		PI	2.77	2.77	2.77	2.77	2.78	2.78	2.78	2.78	2.79	2.79	2.79	2.79	2.81	2.81	2.81	2.81
	50	TC	5.06	5.12	5.18	5.23	5.41	5.41	5.46	5.52	5.61	5.61	5.61	5.67	6.07	6.07	6.07	6.07
		S/T	0.87	1.00	1.00	1.00	0.66	0.80	0.93	1.00	0.56	0.69	0.82	0.95	0.33	0.45	0.58	0.91
		PI	3.00	3.00	3.00	3.00	3.02	3.02	3.02	3.02	3.02	3.02	3.02	3.02	3.05	3.05	3.05	3.05
1247	-15	TC	7.68	7.77	7.86	7.95	8.06	8.06	8.06	8.15	8.26	8.26	8.26	8.26	8.79	8.79	8.79	8.79
		S/T	0.75	0.86	1.00	1.00	0.59	0.70	0.80	0.98	0.51	0.61	0.71	0.81	0.33	0.42	0.52	0.61
		PI	1.61	1.61	1.61	1.61	1.61	1.61	1.61	1.61	1.60	1.60	1.60	1.60	1.60	1.60	1.60	1.60
	-10	TC	7.63	7.72	7.81	7.90	8.02	8.02	8.02	8.10	8.22	8.22	8.22	8.22	8.76	8.76	8.76	8.76
		S/T	0.76	0.86	1.00	1.00	0.59	0.70	0.81	0.98	0.51	0.61	0.72	0.82	0.33	0.43	0.52	0.61
		PI	1.60	1.60	1.60	1.60	1.60	1.60	1.60	1.60	1.60	1.60	1.60	1.60	1.60	1.60	1.60	1.60
	-5	TC	7.59	7.68	7.77	7.85	7.99	7.99	7.99	8.07	8.19	8.19	8.19	8.19	8.73	8.73	8.73	8.73
		S/T	0.76	0.87	1.00	1.00	0.59	0.70	0.81	0.99	0.52	0.61	0.72	0.82	0.33	0.43	0.53	0.61
		PI	1.60	1.60	1.60	1.60	1.60	1.60	1.60	1.60	1.60	1.60	1.60	1.60	1.60	1.60	1.60	1.60
	0	TC	7.55	7.64	7.73	7.82	7.96	7.96	7.96	8.04	8.17	8.17	8.17	8.17	8.73	8.73	8.73	8.73
		S/T	0.76	0.87	1.00	1.00	0.60	0.71	0.81	0.99	0.52	0.62	0.73	0.82	0.33	0.43	0.53	0.62
		PI	1.60	1.60	1.60	1.60	1.61	1.61	1.61	1.61	1.60	1.60	1.60	1.60	1.61	1.61	1.61	1.61
	5	TC	7.51	7.60	7.69	7.78	7.93	7.93	7.93	8.01	8.14	8.14	8.14	8.14	8.72	8.72	8.72	8.72
		S/T	0.77	0.88	1.00	1.00	0.60	0.71	0.82	1.00	0.52	0.62	0.73	0.83	0.33	0.43	0.53	0.62
		PI	1.62	1.62	1.62	1.62	1.62	1.62	1.62	1.62	1.62	1.62	1.62	1.62	1.62	1.62	1.62	1.62
	10	TC	7.47	7.55	7.64	7.73	7.89	7.89	7.89	7.98	8.11	8.11	8.11	8.11	8.70	8.70	8.70	8.70
		S/T	0.77	0.88	1.00	1.00	0.60	0.71	0.82	1.00	0.52	0.62	0.73	0.83	0.34	0.44	0.53	0.62
		PI	1.64	1.64	1.64	1.64	1.65	1.65	1.65	1.65	1.64	1.64	1.64	1.64	1.64	1.64	1.64	1.64
	15	TC	7.40	7.49	7.58	7.67	7.83	7.83	7.83	7.92	8.06	8.06	8.06	8.06	8.66	8.66	8.66	8.66
		S/T	0.78	0.89	1.00	1.00	0.61	0.72	0.83	0.93	0.53	0.63	0.74	0.84	0.34	0.44	0.54	0.63
		PI	1.68	1.68	1.68	1.68	1.69	1.69	1.69	1.69	1.68	1.68	1.68	1.68	1.67	1.67	1.67	1.67
	20	TC	7.32	7.41	7.49	7.58	7.75	7.75	7.75	7.84	7.98	7.98	7.98	7.98	8.58	8.58	8.58	8.58
		S/T	0.78	0.89	1.00	1.00	0.61	0.72	0.83	0.93	0.53	0.63	0.74	0.84	0.34	0.44	0.54	0.63
		PI	1.74	1.74	1.74	1.74	1.74	1.74	1.74	1.74	1.73	1.73	1.73	1.73	1.72	1.72	1.72	1.72
	25	TC	6.98	7.03	7.09	7.15	7.41	7.41	7.41	7.49	7.64	7.64	7.64	7.64	8.21	8.21	8.21	8.21
		S/T	0.80	0.92	1.00	1.00	0.62	0.73	0.84	0.95	0.53	0.64	0.75	0.86	0.34	0.44	0.54	0.65
		PI	1.93	1.93	1.93	1.93	1.92	1.92	1.92	1.92	1.92	1.92	1.92	1.92	1.93	1.93	1.93	1.93
	30	TC	6.63	6.69	6.75	6.80	7.06	7.06	7.06	7.12	7.29	7.29	7.29	7.29	7.84	7.84	7.84	7.84
		S/T	0.81	0.94	1.00	1.00	0.63	0.74	0.86	0.98	0.54	0.65	0.77	0.88	0.34	0.44	0.55	0.66
		PI	2.10	2.10	2.10	2.10	2.11	2.11	2.11	2.11	2.11	2.11	2.11	2.11	2.12	2.12	2.12	2.12
	35	TC	6.32	6.37	6.43	6.49	6.72	6.72	6.72	6.78	6.92	6.92	**7.03**	7.09	7.46	7.46	7.46	7.46
		S/T	0.83	0.96	1.00	1.00	0.63	0.76	0.88	1.00	0.54	0.66	**0.78**	0.89	0.33	0.45	0.56	0.67
		PI	2.30	2.30	2.30	2.30	2.31	2.31	2.31	2.31	2.32	2.32	**2.32**	2.32	2.33	2.33	2.33	2.33
	40	TC	5.96	6.02	6.08	6.13	6.35	6.35	6.38	6.43	6.54	6.54	6.60	6.66	7.07	7.07	7.07	7.07
		S/T	0.87	1.00	1.00	1.00	0.65	0.79	0.92	1.00	0.55	0.69	0.82	0.95	0.33	0.45	0.57	0.90
		PI	2.54	2.54	2.54	2.54	2.55	2.55	2.55	2.55	2.56	2.56	2.56	2.56	2.58	2.58	2.58	2.58
	46	TC	5.52	5.58	5.64	5.69	5.90	5.90	5.95	6.01	6.07	6.07	6.07	6.13	6.59	6.59	6.59	6.59
		S/T	0.88	1.00	1.00	1.00	0.66	0.80	0.94	1.00	0.56	0.70	0.84	0.97	0.33	0.45	0.58	0.92
		PI	2.83	2.83	2.83	2.83	2.84	2.84	2.84	2.84	2.85	2.85	2.85	2.85	2.87	2.87	2.87	2.87
	50	TC	5.18	5.23	5.29	5.35	5.52	5.52	5.58	5.64	5.72	5.72	5.72	5.78	6.18	6.18	6.18	6.18
		S/T	0.91	1.00	1.00	1.00	0.68	0.83	0.97	1.00	0.57	0.71	0.86	1.00	0.32	0.46	0.59	0.97
		PI	3.07	3.07	3.07	3.07	3.08	3.08	3.08	3.08	3.09	3.09	3.09	3.09	3.10	3.10	3.10	3.10

TC:Total Cooling Capacity (kW)

S/T:Sensible Cooling Capacity Ratio

PI:Power Input(kW)

Note: The table shows the case where the operation frequency of a compressor is fixed.

30k																		
INDOOR AIRFLOW (CMH)	OUTDOOR DB(℃)	ID WB (℃)	16.0				18.0				19.0				22.0			
		ID DB (℃)	23.0	25.0	27.0	29.0	23.0	25.0	27.0	29.0	23.0	25.0	27.0	29.0	23.0	25.0	27.0	29.0
1300	-15	TC	9.20	9.22	9.31	9.40	9.68	9.89	9.89	9.98	9.90	9.90	9.90	9.90	10.52	10.52	10.52	10.52
		S/T	0.72	0.82	0.91	0.97	0.57	0.66	0.75	0.84	0.50	0.59	0.68	0.76	0.34	0.42	0.50	0.59
		PI	1.84	1.84	1.84	1.84	1.83	1.83	1.83	1.83	1.83	1.83	1.83	1.83	1.83	1.83	1.83	1.83
	-10	TC	9.15	9.16	9.25	9.34	9.62	9.83	9.83	9.92	9.85	9.85	9.85	9.85	10.49	10.49	10.49	10.49
		S/T	0.73	0.82	0.91	0.97	0.57	0.67	0.76	0.84	0.50	0.59	0.68	0.77	0.34	0.43	0.50	0.59
		PI	1.83	1.83	1.83	1.83	1.82	1.82	1.82	1.82	1.83	1.83	1.83	1.83	1.83	1.83	1.83	1.83
	-5	TC	9.09	9.11	9.20	9.29	9.59	9.80	9.80	9.89	9.82	9.82	9.82	9.82	10.46	10.46	10.46	10.46
		S/T	0.73	0.83	0.92	0.98	0.58	0.67	0.76	0.85	0.51	0.59	0.68	0.77	0.34	0.43	0.51	0.59
		PI	1.83	1.82	1.82	1.83	1.82	1.82	1.82	1.82	1.83	1.83	1.83	1.83	1.83	1.83	1.83	1.83
	0	TC	9.05	9.06	9.15	9.24	9.55	9.76	9.76	9.85	9.79	9.79	9.79	9.79	10.45	10.45	10.45	10.45
		S/T	0.74	0.83	0.92	0.98	0.58	0.67	0.76	0.85	0.51	0.60	0.69	0.77	0.34	0.43	0.51	0.60
		PI	1.83	1.83	1.83	1.83	1.83	1.83	1.83	1.83	1.83	1.83	1.83	1.83	1.84	1.84	1.84	1.84
	5	TC	9.00	9.02	9.11	9.19	9.51	9.72	9.72	9.81	9.76	9.76	9.76	9.76	10.44	10.44	10.44	10.44
		S/T	0.74	0.84	0.93	0.99	0.58	0.68	0.77	0.86	0.51	0.60	0.69	0.78	0.34	0.43	0.51	0.60
		PI	1.85	1.85	1.85	1.85	1.85	1.85	1.85	1.85	1.85	1.85	1.85	1.85	1.85	1.85	1.85	1.85
	10	TC	8.95	8.96	9.05	9.14	9.47	9.68	9.68	9.77	9.72	9.72	9.72	9.72	10.42	10.42	10.42	10.42
		S/T	0.74	0.84	0.93	0.99	0.58	0.68	0.77	0.86	0.51	0.60	0.69	0.78	0.35	0.44	0.51	0.60
		PI	1.88	1.88	1.88	1.88	1.87	1.87	1.87	1.87	1.88	1.88	1.88	1.88	1.88	1.88	1.88	1.88
	15	TC	8.87	8.89	8.98	9.06	9.41	9.61	9.61	9.70	9.66	9.66	9.66	9.66	10.37	10.37	10.37	10.37
		S/T	0.75	0.85	0.94	1.00	0.59	0.68	0.78	0.87	0.52	0.61	0.70	0.79	0.35	0.44	0.52	0.61
		PI	1.93	1.93	1.93	1.93	1.92	1.92	1.92	1.92	1.92	1.92	1.92	1.92	1.92	1.92	1.92	1.92
	20	TC	8.77	8.79	8.88	8.96	9.31	9.31	9.31	9.31	9.56	9.56	9.56	9.56	10.28	10.28	10.28	10.28
		S/T	0.75	0.85	0.94	1.00	0.59	0.69	0.78	0.87	0.52	0.61	0.70	0.79	0.35	0.44	0.52	0.61
		PI	2.00	1.99	1.99	2.00	1.98	1.98	1.98	1.98	1.98	1.98	1.98	1.98	1.97	1.97	1.97	1.97
	25	TC	8.36	8.36	8.44	8.53	8.90	8.90	8.90	8.99	9.16	9.16	9.16	9.16	9.85	9.85	9.85	9.85
		S/T	0.76	0.86	0.96	1.00	0.60	0.70	0.79	0.89	0.52	0.62	0.71	0.81	0.35	0.44	0.53	0.61
		PI	2.20	2.20	2.20	2.20	2.20	2.20	2.20	2.20	2.20	2.20	2.20	2.20	2.20	2.20	2.20	2.20
	30	TC	7.98	7.98	8.07	8.16	8.47	8.47	8.47	8.56	8.73	8.73	8.73	8.73	9.42	9.42	9.42	9.42
		S/T	0.77	0.88	0.99	1.00	0.60	0.71	0.81	0.91	0.53	0.63	0.73	0.83	0.35	0.44	0.53	0.62
		PI	2.41	2.41	2.41	2.41	2.42	2.42	2.42	2.42	2.42	2.42	2.42	2.42	2.43	2.43	2.43	2.43
	35	TC	7.58	7.67	7.75	7.84	8.07	8.07	8.07	8.16	8.33	8.33	8.44	8.33	8.96	8.96	8.96	8.96
		S/T	0.79	0.90	1.00	1.00	0.61	0.72	0.83	0.93	0.53	0.63	0.73	0.84	0.34	0.44	0.54	0.63
		PI	2.63	2.63	2.63	2.63	2.64	2.64	2.64	2.64	2.65	2.65	2.65	2.65	2.66	2.66	2.66	2.66
	40	TC	7.12	7.19	7.26	7.34	7.59	7.59	7.59	7.66	7.82	7.82	7.89	7.86	8.44	8.44	8.44	8.44
		S/T	0.82	0.94	1.00	1.00	0.63	0.74	0.86	0.98	0.54	0.65	0.77	0.88	0.34	0.44	0.55	0.66
		PI	2.90	2.90	2.90	2.90	2.91	2.91	2.91	2.91	2.92	2.92	2.92	2.92	2.93	2.93	2.93	2.93
	46	TC	6.59	6.64	6.70	6.76	7.04	7.04	7.04	7.10	7.25	7.25	7.25	7.33	7.85	7.85	7.85	7.85
		S/T	0.83	0.96	1.00	1.00	0.63	0.76	0.88	1.00	0.54	0.66	0.78	0.90	0.33	0.45	0.56	0.67
		PI	3.22	3.22	3.22	3.22	3.24	3.24	3.24	3.24	3.24	3.24	3.24	3.24	3.27	3.27	3.27	3.27
	50	TC	6.19	6.24	6.30	6.36	6.62	6.62	6.67	6.73	6.82	6.82	6.82	6.87	7.39	7.39	7.39	7.39
		S/T	0.85	0.99	1.00	1.00	0.64	0.78	0.90	1.00	0.55	0.68	0.80	0.93	0.33	0.45	0.57	0.68
		PI	3.49	3.49	3.49	3.49	3.51	3.51	3.51	3.51	3.52	3.52	3.52	3.52	3.55	3.55	3.55	3.55
1530	-15	TC	9.40	9.49	9.58	9.67	9.89	9.89	9.89	9.98	10.12	10.12	10.12	10.12	10.76	10.76	10.76	10.76
		S/T	0.76	0.87	0.98	1.00	0.59	0.70	0.80	0.90	0.51	0.61	0.71	0.82	0.33	0.42	0.52	0.62
		PI	1.87	1.87	1.87	1.87	1.86	1.86	1.86	1.86	1.86	1.86	1.86	1.86	1.86	1.86	1.86	1.86
	-10	TC	9.35	9.44	9.53	9.62	9.83	9.83	9.83	9.92	10.06	10.06	10.06	10.06	10.73	10.73	10.73	10.73
		S/T	0.77	0.87	0.99	1.00	0.59	0.70	0.81	0.90	0.51	0.61	0.72	0.82	0.33	0.43	0.52	0.62
		PI	1.86	1.86	1.86	1.86	1.86	1.86	1.86	1.86	1.86	1.86	1.86	1.86	1.86	1.86	1.86	1.86
	-5	TC	9.29	9.38	9.47	9.56	9.80	9.80	9.80	9.89	10.03	10.03	10.03	10.03	10.70	10.70	10.70	10.70
		S/T	0.77	0.88	0.99	1.00	0.59	0.70	0.81	0.91	0.52	0.61	0.72	0.83	0.33	0.43	0.53	0.62
		PI	1.85	1.85	1.85	1.85	1.85	1.85	1.85	1.85	1.86	1.86	1.86	1.86	1.86	1.86	1.86	1.86
	0	TC	9.24	9.33	9.42	9.51	9.76	9.76	9.76	9.85	10.00	10.00	10.00	10.00	10.69	10.69	10.69	10.69
		S/T	0.77	0.88	1.00	1.00	0.60	0.71	0.81	0.91	0.52	0.62	0.73	0.83	0.33	0.43	0.53	0.63
		PI	1.86	1.86	1.86	1.86	1.86	1.86	1.86	1.86	1.87	1.87	1.87	1.87	1.87	1.87	1.87	1.87
	5	TC	9.20	9.29	9.37	9.46	9.72	9.72	9.72	9.81	9.97	9.97	9.97	9.97	10.68	10.68	10.68	10.68
		S/T	0.78	0.89	1.00	1.00	0.60	0.71	0.82	0.92	0.52	0.62	0.73	0.84	0.33	0.43	0.53	0.63
		PI	1.88	1.88	1.88	1.88	1.88	1.88	1.88	1.88	1.88	1.88	1.88	1.88	1.88	1.88	1.88	1.88
	10	TC	9.14	9.23	9.32	9.41	9.68	9.68	9.68	9.77	9.93	9.93	9.93	9.93	10.65	10.65	10.65	10.65
		S/T	0.78	0.89	1.00	1.00	0.60	0.71	0.82	0.92	0.52	0.62	0.73	0.84	0.34	0.44	0.53	0.63
		PI	1.91	1.91	1.91	1.91	1.90	1.90	1.90	1.90	1.91	1.91	1.91	1.91	1.91	1.91	1.91	1.91
	15	TC	9.07	9.15	9.24	9.33	9.61	9.61	9.61	9.70	9.87	9.87	9.87	9.87	10.61	10.61	10.61	10.61
		S/T	0.79	0.90	1.00	1.00	0.61	0.72	0.83	0.93	0.53	0.63	0.74	0.85	0.34	0.44	0.54	0.64
		PI	1.96	1.96	1.96	1.96	1.95	1.95	1.95	1.95	1.95	1.95	1.95	1.95	1.95	1.95	1.95	1.95
	20	TC	8.96	9.05	9.14	9.22	9.51	9.51	9.51	9.60	9.77	9.77	9.77	9.77	10.52	10.52	10.52	10.52
		S/T	0.79	0.90	1.00	1.00	0.61	0.72	0.83	0.93	0.53	0.63	0.74	0.85	0.34	0.44	0.54	0.64
		PI	2.03	2.03	2.03	2.03	2.02	2.02	2.02	2.02	2.02	2.02	2.02	2.02	2.01	2.01	2.01	2.01
	25	TC	8.53	8.62	8.71	8.79	9.08	9.08	9.08	9.17	9.34	9.34	9.34	9.34	10.06	10.06	10.06	10.06
		S/T	0.80	0.92	1.00	1.00	0.62	0.73	0.84	0.95	0.53	0.64	0.75	0.86	0.34	0.44	0.54	0.65
		PI	2.23	2.23	2.23	2.23	2.23	2.23	2.23	2.23	2.23	2.23	2.23	2.23	2.23	2.23	2.23	2.23
	30	TC	8.13	8.22	8.30	8.39	8.65	8.65	8.65	8.74	8.91	8.91	8.91	8.91	9.63	9.63	9.63	9.63
		S/T	0.82	0.94	1.00	1.00	0.63	0.74	0.86	0.98	0.54	0.65	0.77	0.88	0.34	0.44	0.55	0.66
		PI	2.45	2.45	2.45	2.45	2.45	2.45	2.45	2.45	2.46	2.46	2.46	2.46	2.47	2.47	2.47	2.47
	35	TC	7.73	7.82	7.90	7.99	8.25	8.25	8.25	8.33	8.48	8.48	8.62	8.71	9.17	9.17	9.17	9.17
		S/T	0.83	0.96	1.00	1.00	0.63	0.76	0.88	1.00	0.54	0.66	0.78	0.89	0.33	0.45	0.56	0.67
		PI	2.67	2.67	2.67	2.67	2.68	2.68	2.68	2.68	2.69	2.69	2.69	2.69	2.69	2.69	2.69	2.69
	40	TC	7.29	7.37	7.44	7.51	7.78	7.78	7.82	7.91	8.01	8.01	8.09	8.18	8.66	8.66	8.66	8.66
		S/T	0.87	1.00	1.00	1.00	0.65	0.79	0.92	1.00	0.55	0.69	0.82	0.95	0.33	0.45	0.57	0.70
		PI	2.95	2.95	2.95	2.95	2.96	2.96	2.96	2.96	2.97	2.97	2.97	2.97	2.98	2.98	2.98	2.98
	46	TC	6.76	6.82	6.87	6.93	7.22	7.22	7.30	7.39	7.45	7.45	7.45	7.53	8.05	8.05	8.05	8.05
		S/T	0.88	1.00	1.00	1.00	0.66	0.80	0.94	1.00	0.56	0.70	0.84	0.97	0.33	0.45	0.58	0.71
		PI	3.28	3.28	3.28	3.28	3.30	3.30	3.30	3.30	3.31	3.31	3.31	3.31	3.33	3.33	3.33	3.33
	50	TC	6.33	6.38	6.44	6.50	6.76	6.76	6.82	6.87	6.99	6.99	6.99	7.05	7.59	7.59	7.59	7.59
		S/T	0.91	1.00	1.00	1.00	0.68	0.83	0.98	1.00	0.57	0.72	0.86	1.00	0.32	0.46	0.59	0.91
		PI	3.56	3.56	3.56	3.56	3.58	3.58	3.58	3.58	3.58	3.58	3.58	3.58	3.61	3.61	3.61	3.61

1700	-15	TC	9.58	9.67	9.76	9.85	10.07	10.07	10.07	10.16	10.32	10.32	10.32	10.32	10.97	10.97	10.97	10.97
		S/T	0.78	0.90	1.00	1.00	0.60	0.71	0.83	0.98	0.52	0.63	0.74	0.85	0.33	0.42	0.53	0.64
		PI	1.90	1.90	1.90	1.90	1.90	1.90	1.90	1.90	1.90	1.90	1.90	1.90	1.89	1.89	1.89	1.89
	-10	TC	9.53	9.62	9.71	9.80	10.01	10.01	10.01	10.10	10.27	10.27	10.27	10.27	10.93	10.93	10.93	10.93
		S/T	0.79	0.90	1.00	1.00	0.60	0.72	0.83	0.98	0.52	0.63	0.75	0.85	0.33	0.43	0.53	0.64
		PI	1.89	1.89	1.89	1.89	1.90	1.90	1.90	1.90	1.89	1.89	1.89	1.89	1.90	1.90	1.90	1.90
	-5	TC	9.47	9.56	9.65	9.74	9.98	9.98	9.98	10.06	10.23	10.23	10.23	10.23	10.90	10.90	10.90	10.90
		S/T	0.79	0.91	1.00	1.00	0.60	0.72	0.84	0.99	0.53	0.63	0.75	0.86	0.33	0.43	0.54	0.64
		PI	1.89	1.89	1.89	1.89	1.90	1.90	1.90	1.90	1.89	1.89	1.89	1.89	1.90	1.90	1.90	1.90
	0	TC	9.42	9.51	9.60	9.69	9.94	9.94	9.94	10.03	10.21	10.21	10.21	10.21	10.89	10.89	10.89	10.89
		S/T	0.79	0.91	1.00	1.00	0.61	0.73	0.84	0.99	0.53	0.64	0.75	0.86	0.33	0.43	0.54	0.65
		PI	1.90	1.90	1.90	1.90	1.90	1.90	1.90	1.90	1.90	1.90	1.90	1.90	1.91	1.91	1.91	1.91
	5	TC	9.37	9.46	9.55	9.64	9.90	9.90	9.90	9.99	10.17	10.17	10.17	10.17	10.88	10.88	10.88	10.88
		S/T	0.80	0.92	1.00	1.00	0.61	0.73	0.85	1.00	0.53	0.64	0.76	0.87	0.33	0.43	0.54	0.65
		PI	1.92	1.92	1.92	1.92	1.92	1.92	1.92	1.92	1.92	1.92	1.92	1.92	1.92	1.92	1.92	1.92
	10	TC	9.32	9.41	9.49	9.58	9.85	9.85	9.85	9.94	10.13	10.13	10.13	10.13	10.86	10.86	10.86	10.86
		S/T	0.80	0.92	1.00	1.00	0.61	0.73	0.85	1.00	0.53	0.64	0.76	0.87	0.34	0.44	0.54	0.65
		PI	1.95	1.95	1.95	1.95	1.95	1.95	1.95	1.95	1.95	1.95	1.95	1.95	1.94	1.94	1.94	1.94
	15	TC	9.24	9.33	9.42	9.50	9.79	9.79	9.79	9.87	10.07	10.07	10.07	10.07	10.81	10.81	10.81	10.81
		S/T	0.81	0.93	1.00	1.00	0.62	0.74	0.86	0.97	0.54	0.65	0.77	0.88	0.34	0.44	0.55	0.66
		PI	2.00	2.00	2.00	2.00	2.00	2.00	2.00	2.00	1.99	1.99	1.99	1.99	1.99	1.99	1.99	1.99
	20	TC	9.14	9.22	9.31	9.40	9.68	9.68	9.68	9.77	9.97	9.97	9.97	9.97	10.72	10.72	10.72	10.72
		S/T	0.81	0.93	1.00	1.00	0.62	0.74	0.86	0.97	0.54	0.65	0.77	0.88	0.34	0.44	0.55	0.66
		PI	2.06	2.06	2.06	2.06	2.06	2.06	2.06	2.06	2.06	2.06	2.06	2.06	2.05	2.05	2.05	2.05
	25	TC	8.71	8.79	8.88	8.96	9.25	9.25	9.25	9.34	9.54	9.54	9.54	9.63	10.26	10.26	10.26	10.26
		S/T	0.83	0.95	1.00	1.00	0.63	0.76	0.88	1.00	0.54	0.66	0.78	0.90	0.33	0.45	0.56	0.67
		PI	2.28	2.28	2.28	2.28	2.28	2.28	2.28	2.28	2.28	2.28	2.28	2.28	2.28	2.28	2.28	2.28
	30	TC	8.30	8.39	8.48	8.56	8.82	8.82	8.91	8.99	9.11	9.11	9.11	9.19	9.80	9.80	9.80	9.80
		S/T	0.84	0.98	1.00	1.00	0.64	0.77	0.90	1.00	0.55	0.67	0.80	0.92	0.33	0.45	0.56	0.68
		PI	2.50	2.50	2.50	2.50	2.51	2.51	2.51	2.51	2.51	2.51	2.51	2.51	2.52	2.52	2.52	2.52
	35	TC	7.90	7.99	8.07	8.16	8.39	8.39	8.48	8.56	8.65	8.65	**8.79**	8.88	9.34	9.34	9.34	9.34
		S/T	0.86	1.00	1.00	1.00	0.65	0.79	0.92	1.00	0.55	0.69	**0.81**	0.94	0.33	0.45	0.57	0.70
		PI	2.73	2.73	2.73	2.73	2.74	2.74	2.74	2.74	2.75	2.75	**2.75**	2.75	2.76	2.76	2.76	2.76
	40	TC	7.44	7.51	7.58	7.66	7.93	7.93	8.01	8.10	8.17	8.17	8.25	8.34	8.84	8.84	8.84	8.84
		S/T	0.90	1.00	1.00	1.00	0.67	0.82	0.97	1.00	0.57	0.71	0.85	0.99	0.32	0.46	0.59	0.90
		PI	3.01	3.01	3.01	3.01	3.03	3.03	3.03	3.03	3.04	3.04	3.04	3.04	3.06	3.06	3.06	3.06
	46	TC	6.87	6.93	6.99	7.05	7.36	7.36	7.45	7.53	7.59	7.59	7.59	7.68	8.23	8.23	8.23	8.23
		S/T	0.92	1.00	1.00	1.00	0.68	0.84	0.99	1.00	0.57	0.72	0.87	1.00	0.32	0.46	0.60	0.92
		PI	3.35	3.35	3.35	3.35	3.37	3.37	3.37	3.37	3.38	3.38	3.38	3.38	3.41	3.41	3.41	3.41
	50	TC	6.47	6.53	6.59	6.64	6.90	6.90	6.96	7.02	7.13	7.13	7.19	7.28	7.74	7.74	7.74	7.74
		S/T	0.95	1.00	1.00	1.00	0.70	0.86	1.00	1.00	0.58	0.74	0.90	1.00	0.32	0.47	0.61	0.97
		PI	3.63	3.63	3.63	3.63	3.64	3.64	3.64	3.64	3.65	3.65	3.65	3.65	3.68	3.68	3.68	3.68

TC:Total Cooling Capacity (kW)

S/T:Sensible Cooling Capacity Ratio

PI:Power Input(kW)

Note: The table shows the case where the operation frequency of a compressor is fixed.

36k+MOD30U-36HFN8-QRD0W(GA)																		
INDOOR AIRFLOW (CMH)	OUTDOOR DB(℃)	ID WB (℃)	16.0				18.0				19.0				22.0			
		ID DB (℃)	23.0	25.0	27.0	29.0	23.0	25.0	27.0	29.0	23.0	25.0	27.0	29.0	23.0	25.0	27.0	29.0
1300	-15	TC	11.05	11.06	11.06	11.18	11.63	11.87	11.87	11.87	11.90	11.90	11.90	11.90	12.65	12.65	12.65	12.65
		S/T	0.69	0.77	0.85	0.93	0.56	0.63	0.70	0.78	0.49	0.57	0.64	0.71	0.36	0.42	0.49	0.56
		PI	2.63	2.63	2.63	2.63	2.62	2.62	2.62	2.62	2.61	2.61	2.61	2.61	2.61	2.61	2.61	2.61
	-10	TC	10.99	11.00	11.00	11.11	11.56	11.80	11.80	11.80	11.84	11.84	11.84	11.84	12.60	12.60	12.60	12.60
		S/T	0.69	0.78	0.85	0.93	0.56	0.63	0.71	0.79	0.49	0.57	0.64	0.72	0.36	0.43	0.49	0.56
		PI	2.62	2.61	2.61	2.62	2.61	2.61	2.61	2.61	2.61	2.61	2.61	2.61	2.62	2.62	2.62	2.62
	-5	TC	10.92	10.93	10.93	11.05	11.52	11.76	11.76	11.76	11.80	11.80	11.80	11.80	12.57	12.57	12.57	12.57
		S/T	0.69	0.78	0.86	0.94	0.57	0.64	0.71	0.79	0.50	0.58	0.64	0.72	0.36	0.43	0.50	0.57
		PI	2.61	2.61	2.61	2.61	2.61	2.61	2.61	2.61	2.61	2.61	2.61	2.61	2.62	2.62	2.62	2.62
	0	TC	10.87	10.87	10.87	10.99	11.47	11.71	11.71	11.71	11.77	11.77	11.77	11.77	12.56	12.56	12.56	12.56
		S/T	0.70	0.78	0.86	0.94	0.57	0.64	0.72	0.79	0.50	0.58	0.65	0.73	0.36	0.43	0.50	0.57
		PI	2.62	2.62	2.62	2.62	2.62	2.62	2.62	2.62	2.62	2.62	2.62	2.62	2.63	2.63	2.63	2.63
	5	TC	10.81	10.82	10.82	10.94	11.43	11.67	11.67	11.67	11.73	11.73	11.73	11.73	12.55	12.55	12.55	12.55
		S/T	0.70	0.79	0.87	0.95	0.57	0.64	0.72	0.80	0.50	0.58	0.65	0.73	0.36	0.43	0.50	0.57
		PI	2.65	2.64	2.64	2.65	2.64	2.64	2.64	2.64	2.64	2.64	2.64	2.64	2.65	2.65	2.65	2.65
	10	TC	10.75	10.75	10.75	10.87	11.38	11.61	11.61	11.61	11.68	11.68	11.68	11.68	12.52	12.52	12.52	12.52
		S/T	0.70	0.79	0.87	0.95	0.57	0.65	0.72	0.80	0.50	0.58	0.65	0.73	0.37	0.44	0.50	0.57
		PI	2.69	2.69	2.69	2.69	2.68	2.68	2.68	2.68	2.68	2.68	2.68	2.68	2.68	2.68	2.68	2.68
	15	TC	10.66	10.67	10.67	10.78	11.30	11.54	11.54	11.54	11.61	11.61	11.61	11.61	12.46	12.46	12.46	12.46
		S/T	0.71	0.80	0.88	0.96	0.58	0.65	0.73	0.81	0.51	0.59	0.66	0.74	0.37	0.44	0.51	0.58
		PI	2.76	2.75	2.75	2.76	2.75	2.75	2.75	2.75	2.74	2.74	2.74	2.74	2.74	2.74	2.74	2.74
	20	TC	10.54	10.55	10.55	10.66	11.18	11.18	11.18	11.18	11.50	11.50	11.50	11.50	12.36	12.36	12.36	12.36
		S/T	0.71	0.80	0.88	0.96	0.58	0.65	0.73	0.81	0.51	0.59	0.66	0.74	0.37	0.44	0.51	0.58
		PI	2.85	2.85	2.85	2.85	2.84	2.84	2.84	2.84	2.83	2.83	2.83	2.83	2.82	2.82	2.82	2.82
	25	TC	10.06	10.06	10.17	10.29	10.69	10.69	10.69	10.69	11.01	11.01	11.01	11.01	11.84	11.84	11.84	11.84
		S/T	0.72	0.81	0.89	0.97	0.58	0.66	0.74	0.82	0.51	0.59	0.67	0.75	0.36	0.44	0.51	0.58
		PI	3.14	3.14	3.14	3.14	3.14	3.14	3.14	3.14	3.14	3.14	3.14	3.14	3.14	3.14	3.14	3.14
	30	TC	9.57	9.57	9.66	9.74	10.20	10.20	10.20	10.20	10.49	10.49	10.49	10.49	11.32	11.32	11.32	11.32
		S/T	0.73	0.82	0.91	1.00	0.58	0.67	0.75	0.84	0.52	0.60	0.68	0.77	0.36	0.44	0.51	0.59
		PI	3.44	3.44	3.44	3.44	3.45	3.45	3.45	3.45	3.46	3.46	3.46	3.46	3.47	3.47	3.47	3.47
	35	TC	9.11	9.11	9.20	9.28	9.68	9.68	9.68	9.68	10.00	10.00	10.14	10.00	10.78	10.78	10.78	10.78
		S/T	0.74	0.84	0.93	1.00	0.59	0.68	0.77	0.86	0.52	0.60	0.69	0.78	0.36	0.44	0.52	0.60
		PI	3.76	3.76	3.76	3.76	3.78	3.78	3.78	3.78	3.78	3.78	3.79	3.78	3.81	3.81	3.81	3.81
	40	TC	8.58	8.58	8.66	8.75	9.14	9.14	9.14	9.18	9.43	9.43	9.51	9.43	10.18	10.18	10.18	10.18
		S/T	0.76	0.87	0.97	1.00	0.60	0.70	0.80	0.89	0.52	0.62	0.71	0.81	0.35	0.44	0.53	0.61
		PI	4.15	4.15	4.15	4.15	4.17	4.17	4.17	4.17	4.18	4.18	4.18	4.18	4.21	4.21	4.21	4.21
	46	TC	7.93	7.93	8.02	8.10	8.48	8.48	8.48	8.56	8.74	8.74	8.74	8.74	9.46	9.46	9.46	9.46
		S/T	0.77	0.88	0.99	1.00	0.60	0.71	0.81	0.91	0.53	0.63	0.73	0.83	0.35	0.44	0.53	0.62
		PI	4.62	4.62	4.62	4.62	4.64	4.64	4.64	4.64	4.65	4.65	4.65	4.65	4.69	4.69	4.69	4.69
	50	TC	7.44	7.53	7.62	7.70	7.96	7.96	7.96	8.05	8.22	8.22	8.22	8.22	8.91	8.91	8.91	8.91
		S/T	0.79	0.90	1.00	1.00	0.61	0.72	0.83	0.94	0.53	0.64	0.74	0.85	0.34	0.44	0.54	0.64
		PI	5.00	5.00	5.00	5.00	5.02	5.02	5.02	5.02	5.03	5.03	5.03	5.03	5.07	5.07	5.07	5.07
1530	-15	TC	11.28	11.28	11.40	11.52	11.87	11.87	11.87	11.87	12.15	12.15	12.15	12.15	12.92	12.92	12.92	12.92
		S/T	0.71	0.81	0.98	1.00	0.57	0.66	0.74	0.83	0.50	0.59	0.67	0.75	0.35	0.42	0.50	0.58
		PI	2.68	2.68	2.68	2.68	2.68	2.68	2.68	2.68	2.67	2.67	2.67	2.67	2.67	2.67	2.67	2.67
	-10	TC	11.21	11.21	11.33	11.45	11.80	11.80	11.80	11.80	12.08	12.08	12.08	12.08	12.87	12.87	12.87	12.87
		S/T	0.72	0.82	0.99	1.00	0.57	0.66	0.75	0.83	0.50	0.59	0.67	0.76	0.35	0.43	0.50	0.58
		PI	2.67	2.67	2.67	2.67	2.67	2.67	2.67	2.67	2.67	2.67	2.67	2.67	2.67	2.67	2.67	2.67
	-5	TC	11.14	11.14	11.26	11.38	11.76	11.76	11.76	11.76	12.04	12.04	12.04	12.04	12.84	12.84	12.84	12.84
		S/T	0.72	0.82	0.99	1.00	0.58	0.66	0.75	0.84	0.51	0.59	0.67	0.76	0.35	0.43	0.51	0.59
		PI	2.67	2.67	2.67	2.67	2.67	2.67	2.67	2.67	2.67	2.67	2.67	2.67	2.67	2.67	2.67	2.67
	0	TC	11.09	11.09	11.21	11.32	11.71	11.71	11.71	11.71	12.01	12.01	12.01	12.01	12.83	12.83	12.83	12.83
		S/T	0.73	0.82	1.00	1.00	0.58	0.67	0.75	0.84	0.51	0.60	0.68	0.76	0.35	0.43	0.51	0.59
		PI	2.68	2.68	2.68	2.68	2.68	2.68	2.68	2.68	2.68	2.68	2.68	2.68	2.68	2.68	2.68	2.68
	5	TC	11.03	11.03	11.15	11.27	11.67	11.67	11.67	11.67	11.97	11.97	11.97	11.97	12.82	12.82	12.82	12.82
		S/T	0.73	0.83	1.00	1.00	0.58	0.67	0.76	0.85	0.51	0.60	0.68	0.77	0.35	0.43	0.51	0.59
		PI	2.70	2.70	2.70	2.70	2.70	2.70	2.70	2.70	2.70	2.70	2.70	2.70	2.70	2.70	2.70	2.70
	10	TC	10.96	10.96	11.08	11.20	11.61	11.61	11.61	11.61	11.92	11.92	11.92	11.92	12.78	12.78	12.78	12.78
		S/T	0.73	0.83	1.00	1.00	0.58	0.67	0.76	0.85	0.51	0.60	0.68	0.77	0.36	0.44	0.51	0.59
		PI	2.75	2.75	2.75	2.75	2.74	2.74	2.74	2.74	2.74	2.74	2.74	2.74	2.74	2.74	2.74	2.74
	15	TC	10.87	10.87	10.99	11.11	11.54	11.54	11.54	11.54	11.85	11.85	11.85	11.85	12.73	12.73	12.73	12.73
		S/T	0.74	0.84	0.93	1.00	0.59	0.68	0.77	0.86	0.52	0.61	0.69	0.78	0.36	0.44	0.52	0.60
		PI	2.81	2.81	2.81	2.81	2.81	2.81	2.81	2.81	2.80	2.80	2.80	2.80	2.80	2.80	2.80	2.80
	20	TC	10.75	10.75	10.87	10.98	11.41	11.41	11.41	11.41	11.73	11.73	11.73	11.73	12.62	12.62	12.62	12.62
		S/T	0.74	0.84	0.93	1.00	0.59	0.68	0.77	0.86	0.52	0.61	0.69	0.78	0.36	0.44	0.52	0.60
		PI	2.91	2.91	2.91	2.91	2.90	2.90	2.90	2.90	2.89	2.89	2.89	2.89	2.88	2.88	2.88	2.88
	25	TC	10.26	10.26	10.38	10.49	10.90	10.90	10.90	10.90	11.21	11.21	11.21	11.21	12.07	12.07	12.07	12.07
		S/T	0.75	0.85	0.95	1.00	0.59	0.69	0.78	0.88	0.52	0.61	0.70	0.80	0.35	0.44	0.52	0.61
		PI	3.21	3.21	3.21	3.21	3.21	3.21	3.21	3.21	3.21	3.21	3.21	3.21	3.21	3.21	3.21	3.21
	30	TC	9.77	9.77	9.86	9.95	10.41	10.41	10.41	10.52	10.72	10.72	10.72	10.72	11.53	11.53	11.53	11.53
		S/T	0.76	0.87	0.97	1.00	0.60	0.70	0.80	0.89	0.52	0.62	0.71	0.81	0.35	0.44	0.53	0.62
		PI	3.52	3.52	3.52	3.52	3.52	3.52	3.52	3.52	3.53	3.53	3.53	3.53	3.54	3.54	3.54	3.54
	35	TC	9.29	9.37	9.46	9.54	9.89	9.89	9.89	9.98	10.18	10.18	10.35	10.18	10.98	10.98	10.98	10.98
		S/T	0.78	0.88	0.99	1.00	0.61	0.71	0.81	0.91	0.53	0.63	0.72	0.83	0.35	0.44	0.53	0.63
		PI	3.84	3.84	3.84	3.84	3.86	3.86	3.86	3.86	3.86	3.86	3.87	3.86	3.86	3.86	3.86	3.86
	40	TC	8.67	8.75	8.84	8.93	9.24	9.24	9.24	9.33	9.51	9.51	9.61	9.51	10.28	10.28	10.28	10.28
		S/T	0.80	0.92	1.00	1.00	0.62	0.73	0.85	0.96	0.53	0.64	0.76	0.87	0.34	0.44	0.54	0.65
		PI	4.24	4.24	4.24	4.24	4.26	4.26	4.26	4.26	4.27	4.27	4.27	4.27	4.28	4.28	4.28	4.28
	46	TC	8.03	8.12	8.20	8.29	8.57	8.57	8.57	8.66	8.83	8.83	8.83	8.83	9.57	9.57	9.57	9.57
		S/T	0.82	0.94	1.00	1.00	0.63	0.74	0.86	0.98	0.54	0.65	0.77	0.88	0.34	0.44	0.55	0.66
		PI	4.71	4.71	4.71	4.71	4.74	4.74	4.74	4.74	4.75	4.75	4.75	4.75	4.79	4.79	4.79	4.79
	50	TC	7.52	7.60	7.69	7.78	8.06	8.06	8.15	8.23	8.32	8.32	8.32	8.40	9.03	9.03	9.03	9.03
		S/T	0.84	0.97	1.00	1.00	0.64	0.76	0.89	1.00	0.54	0.67	0.79	0.91	0.33	0.45	0.56	0.91
		PI	5.10	5.10	5.10	5.10	5.13	5.13	5.13	5.13	5.14	5.14	5.14	5.14	5.18	5.18	5.18	5.18

1700	-15	TC	11.49	11.49	11.61	11.73	12.08	12.08	12.08	12.20	12.38	12.38	12.38	12.38	13.15	13.15	13.15	13.15
		S/T	0.73	0.83	1.00	1.00	0.58	0.68	0.76	0.98	0.50	0.60	0.69	0.78	0.34	0.42	0.51	0.60
		PI	2.74	2.74	2.74	2.74	2.73	2.73	2.73	2.73	2.72	2.72	2.72	2.72	2.72	2.72	2.72	2.72
	-10	TC	11.42	11.42	11.54	11.66	12.01	12.01	12.01	12.13	12.32	12.32	12.32	12.32	13.11	13.11	13.11	13.11
		S/T	0.74	0.83	1.00	1.00	0.58	0.68	0.77	0.98	0.50	0.60	0.69	0.79	0.34	0.43	0.51	0.60
		PI	2.72	2.72	2.72	2.72	2.72	2.72	2.72	2.72	2.72	2.72	2.72	2.72	2.73	2.73	2.73	2.73
	-5	TC	11.35	11.35	11.47	11.59	11.97	11.97	11.97	12.08	12.28	12.28	12.28	12.28	13.07	13.07	13.07	13.07
		S/T	0.74	0.84	1.00	1.00	0.59	0.68	0.77	0.99	0.51	0.60	0.69	0.79	0.34	0.43	0.52	0.60
		PI	2.72	2.72	2.72	2.72	2.72	2.72	2.72	2.72	2.72	2.72	2.72	2.72	2.73	2.73	2.73	2.73
	0	TC	11.29	11.29	11.41	11.53	11.92	11.92	11.92	12.04	12.24	12.24	12.24	12.24	13.06	13.06	13.06	13.06
		S/T	0.74	0.84	1.00	1.00	0.59	0.69	0.77	0.99	0.51	0.61	0.70	0.79	0.34	0.43	0.52	0.61
		PI	2.73	2.73	2.73	2.73	2.73	2.73	2.73	2.73	2.73	2.73	2.73	2.73	2.74	2.74	2.74	2.74
	5	TC	11.24	11.24	11.36	11.47	11.87	11.87	11.87	11.99	12.20	12.20	12.20	12.20	13.05	13.05	13.05	13.05
		S/T	0.75	0.85	1.00	1.00	0.59	0.69	0.78	1.00	0.51	0.61	0.70	0.80	0.34	0.43	0.52	0.61
		PI	2.76	2.76	2.76	2.76	2.76	2.76	2.76	2.76	2.75	2.75	2.75	2.75	2.76	2.76	2.76	2.76
	10	TC	11.17	11.17	11.29	11.40	11.82	11.82	11.82	11.94	12.15	12.15	12.15	12.15	13.02	13.02	13.02	13.02
		S/T	0.75	0.85	1.00	1.00	0.59	0.69	0.78	1.00	0.51	0.61	0.70	0.80	0.35	0.44	0.52	0.61
		PI	2.80	2.80	2.80	2.80	2.80	2.80	2.80	2.80	2.79	2.79	2.79	2.79	2.80	2.80	2.80	2.80
	15	TC	11.08	11.08	11.19	11.31	11.74	11.74	11.74	11.86	12.08	12.08	12.08	12.08	12.96	12.96	12.96	12.96
		S/T	0.76	0.86	0.96	1.00	0.60	0.70	0.79	0.89	0.52	0.62	0.71	0.81	0.35	0.44	0.53	0.62
		PI	2.87	2.87	2.87	2.87	2.86	2.86	2.86	2.86	2.86	2.86	2.86	2.86	2.85	2.85	2.85	2.85
	20	TC	10.95	10.95	11.07	11.18	11.61	11.61	11.61	11.73	11.96	11.96	11.96	11.96	12.85	12.85	12.85	12.85
		S/T	0.76	0.86	0.96	1.00	0.60	0.70	0.79	0.89	0.52	0.62	0.71	0.81	0.35	0.44	0.53	0.62
		PI	2.97	2.97	2.97	2.97	2.96	2.96	2.96	2.96	2.95	2.95	2.95	2.95	2.94	2.94	2.94	2.94
	25	TC	10.46	10.46	10.58	10.69	11.10	11.10	11.10	11.21	11.44	11.44	11.44	11.44	12.30	12.30	12.30	12.30
		S/T	0.77	0.88	0.98	1.00	0.60	0.71	0.81	0.91	0.53	0.63	0.73	0.83	0.35	0.44	0.53	0.62
		PI	3.27	3.27	3.27	3.27	3.27	3.27	3.27	3.27	3.27	3.27	3.27	3.27	3.27	3.27	3.27	3.27
	30	TC	9.98	10.06	10.18	10.29	10.61	10.61	10.61	10.72	10.92	10.92	10.92	10.92	11.76	11.76	11.76	11.76
		S/T	0.79	0.90	1.00	1.00	0.61	0.72	0.83	0.93	0.53	0.63	0.74	0.84	0.34	0.44	0.54	0.63
		PI	3.59	3.59	3.59	3.59	3.60	3.60	3.60	3.60	3.60	3.60	3.60	3.60	3.62	3.62	3.62	3.62
	35	TC	9.46	9.54	9.63	9.72	10.06	10.06	10.06	10.18	10.38	10.38	**10.55**	10.38	11.21	11.21	11.21	11.21
		S/T	0.80	0.92	1.00	1.00	0.62	0.73	0.85	0.95	0.53	0.64	**0.75**	0.86	0.34	0.44	0.54	0.65
		PI	3.92	3.92	3.92	3.92	3.94	3.94	3.94	3.94	3.94	3.94	**3.95**	3.94	3.97	3.97	3.97	3.97
	40	TC	8.83	8.91	9.00	9.08	9.40	9.40	9.44	9.54	9.70	9.70	9.79	9.74	10.50	10.50	10.50	10.50
		S/T	0.83	0.96	1.00	1.00	0.63	0.76	0.88	1.00	0.54	0.66	0.78	0.90	0.33	0.45	0.56	0.90
		PI	4.32	4.32	4.32	4.32	4.34	4.34	4.34	4.34	4.35	4.35	4.36	4.35	4.39	4.39	4.39	4.39
	46	TC	8.17	8.26	8.35	8.43	8.72	8.72	8.80	8.89	9.00	9.00	9.00	9.09	9.77	9.77	9.77	9.77
		S/T	0.85	0.98	1.00	1.00	0.64	0.77	0.90	1.00	0.55	0.67	0.80	0.92	0.33	0.45	0.56	0.92
		PI	4.81	4.81	4.81	4.81	4.83	4.83	4.83	4.83	4.85	4.85	4.85	4.85	4.89	4.89	4.89	4.89
	50	TC	7.66	7.75	7.83	7.92	8.20	8.20	8.29	8.37	8.49	8.49	8.49	8.57	9.20	9.20	9.20	9.20
		S/T	0.87	1.00	1.00	1.00	0.65	0.79	0.93	1.00	0.55	0.69	0.82	0.95	0.33	0.45	0.57	0.97
		PI	5.21	5.21	5.21	5.21	5.23	5.23	5.23	5.23	5.25	5.25	5.25	5.25	5.29	5.29	5.29	5.29

TC:Total Cooling Capacity (kW)

S/T:Sensible Cooling Capacity Ratio

PI:Power Input(kW)

Note: The table shows the case where the operation frequency of a compressor is fixed.

36k+MOD30U-36HFN8-RRD0W(GA)																		
INDOOR AIRFLOW (CMH)	OUTDOOR DB(℃)	ID WB (℃)	16.0				18.0				19.0				22.0			
		ID DB (℃)	23.0	25.0	27.0	29.0	23.0	25.0	27.0	29.0	23.0	25.0	27.0	29.0	23.0	25.0	27.0	29.0
1300	-15	TC	11.05	11.06	11.06	11.18	11.63	11.87	11.87	11.87	11.90	11.90	11.90	11.90	12.65	12.65	12.65	12.65
		S/T	0.69	0.77	0.85	0.93	0.56	0.63	0.70	0.78	0.49	0.57	0.64	0.71	0.36	0.42	0.49	0.56
		PI	2.66	2.66	2.66	2.66	2.66	2.66	2.66	2.66	2.65	2.65	2.65	2.65	2.65	2.65	2.65	2.65
	-10	TC	10.99	11.00	11.00	11.11	11.56	11.80	11.80	11.80	11.84	11.84	11.84	11.84	12.60	12.60	12.60	12.60
		S/T	0.69	0.78	0.85	0.93	0.56	0.63	0.71	0.79	0.49	0.57	0.64	0.72	0.36	0.43	0.49	0.56
		PI	2.65	2.65	2.65	2.65	2.65	2.65	2.65	2.65	2.65	2.65	2.65	2.65	2.65	2.65	2.65	2.65
	-5	TC	10.92	10.93	10.93	11.05	11.52	11.76	11.76	11.76	11.80	11.80	11.80	11.80	12.57	12.57	12.57	12.57
		S/T	0.69	0.78	0.86	0.94	0.57	0.64	0.71	0.79	0.50	0.58	0.64	0.72	0.36	0.43	0.50	0.57
		PI	2.65	2.65	2.65	2.65	2.65	2.65	2.65	2.65	2.65	2.65	2.65	2.65	2.66	2.66	2.66	2.66
	0	TC	10.87	10.87	10.87	10.99	11.47	11.71	11.71	11.71	11.77	11.77	11.77	11.77	12.56	12.56	12.56	12.56
		S/T	0.70	0.78	0.86	0.94	0.57	0.64	0.72	0.79	0.50	0.58	0.65	0.73	0.36	0.43	0.50	0.57
		PI	2.66	2.66	2.66	2.66	2.66	2.66	2.66	2.66	2.66	2.66	2.66	2.66	2.67	2.67	2.67	2.67
	5	TC	10.81	10.82	10.82	10.94	11.43	11.67	11.67	11.67	11.73	11.73	11.73	11.73	12.55	12.55	12.55	12.55
		S/T	0.70	0.79	0.87	0.95	0.57	0.64	0.72	0.80	0.50	0.58	0.65	0.73	0.36	0.43	0.50	0.57
		PI	2.68	2.68	2.68	2.68	2.68	2.68	2.68	2.68	2.68	2.68	2.68	2.68	2.69	2.69	2.69	2.69
	10	TC	10.75	10.75	10.75	10.87	11.38	11.61	11.61	11.61	11.68	11.68	11.68	11.68	12.52	12.52	12.52	12.52
		S/T	0.70	0.79	0.87	0.95	0.57	0.65	0.72	0.80	0.50	0.58	0.65	0.73	0.37	0.44	0.50	0.57
		PI	2.73	2.73	2.73	2.73	2.72	2.72	2.72	2.72	2.72	2.72	2.72	2.72	2.72	2.72	2.72	2.72
	15	TC	10.66	10.67	10.67	10.78	11.30	11.54	11.54	11.54	11.61	11.61	11.61	11.61	12.46	12.46	12.46	12.46
		S/T	0.71	0.80	0.88	0.96	0.58	0.65	0.73	0.81	0.51	0.59	0.66	0.74	0.37	0.44	0.51	0.58
		PI	2.79	2.79	2.79	2.79	2.79	2.79	2.79	2.79	2.78	2.78	2.78	2.78	2.78	2.78	2.78	2.78
	20	TC	10.54	10.55	10.55	10.66	11.18	11.18	11.18	11.18	11.50	11.50	11.50	11.50	12.36	12.36	12.36	12.36
		S/T	0.71	0.80	0.88	0.96	0.58	0.65	0.73	0.81	0.51	0.59	0.66	0.74	0.37	0.44	0.51	0.58
		PI	2.89	2.89	2.89	2.89	2.88	2.88	2.88	2.88	2.87	2.87	2.87	2.87	2.86	2.86	2.86	2.86
	25	TC	10.06	10.06	10.17	10.29	10.69	10.69	10.69	10.69	11.01	11.01	11.01	11.01	11.84	11.84	11.84	11.84
		S/T	0.72	0.81	0.89	0.97	0.58	0.66	0.74	0.82	0.51	0.59	0.67	0.75	0.36	0.44	0.51	0.58
		PI	3.19	3.19	3.19	3.19	3.19	3.19	3.19	3.19	3.19	3.19	3.19	3.19	3.19	3.19	3.19	3.19
	30	TC	9.57	9.57	9.66	9.74	10.20	10.20	10.20	10.20	10.49	10.49	10.49	10.49	11.32	11.32	11.32	11.32
		S/T	0.73	0.82	0.91	1.00	0.58	0.67	0.75	0.84	0.52	0.60	0.68	0.77	0.36	0.44	0.51	0.59
		PI	3.49	3.49	3.49	3.49	3.50	3.50	3.50	3.50	3.50	3.50	3.50	3.50	3.52	3.52	3.52	3.52
	35	TC	9.11	9.11	9.20	9.28	9.68	9.68	9.68	9.68	10.00	10.00	10.14	10.00	10.78	10.78	10.78	10.78
		S/T	0.74	0.84	0.93	1.00	0.59	0.68	0.77	0.86	0.52	0.60	0.69	0.78	0.36	0.44	0.52	0.60
		PI	3.81	3.81	3.81	3.81	3.83	3.83	3.83	3.83	3.83	3.83	3.84	3.83	3.86	3.86	3.86	3.86
	40	TC	8.58	8.58	8.66	8.75	9.14	9.14	9.14	9.18	9.43	9.43	9.51	9.43	10.18	10.18	10.18	10.18
		S/T	0.76	0.87	0.97	1.00	0.60	0.70	0.80	0.89	0.52	0.62	0.71	0.81	0.35	0.44	0.53	0.61
		PI	4.21	4.21	4.21	4.21	4.23	4.23	4.23	4.23	4.23	4.23	4.24	4.23	4.26	4.26	4.26	4.26
	46	TC	7.93	7.93	8.02	8.10	8.48	8.48	8.48	8.56	8.74	8.74	8.74	8.74	9.46	9.46	9.46	9.46
		S/T	0.77	0.88	0.99	1.00	0.60	0.71	0.81	0.91	0.53	0.63	0.73	0.83	0.35	0.44	0.53	0.62
		PI	4.68	4.68	4.68	4.68	4.70	4.70	4.70	4.70	4.71	4.71	4.71	4.71	4.75	4.75	4.75	4.75
	50	TC	7.44	7.53	7.62	7.70	7.96	7.96	7.96	8.05	8.22	8.22	8.22	8.22	8.91	8.91	8.91	8.91
		S/T	0.79	0.90	1.00	1.00	0.61	0.72	0.83	0.94	0.53	0.64	0.74	0.85	0.34	0.44	0.54	0.64
		PI	5.06	5.06	5.06	5.06	5.09	5.09	5.09	5.09	5.10	5.10	5.10	5.10	5.14	5.14	5.14	5.14
1530	-15	TC	11.28	11.28	11.40	11.52	11.87	11.87	11.87	11.87	12.15	12.15	12.15	12.15	12.92	12.92	12.92	12.92
		S/T	0.71	0.81	0.98	1.00	0.57	0.66	0.74	0.83	0.50	0.59	0.67	0.75	0.35	0.42	0.50	0.58
		PI	2.72	2.72	2.72	2.72	2.71	2.71	2.71	2.71	2.71	2.71	2.71	2.71	2.71	2.71	2.71	2.71
	-10	TC	11.21	11.21	11.33	11.45	11.80	11.80	11.80	11.80	12.08	12.08	12.08	12.08	12.87	12.87	12.87	12.87
		S/T	0.72	0.82	0.99	1.00	0.57	0.66	0.75	0.83	0.50	0.59	0.67	0.76	0.35	0.43	0.50	0.58
		PI	2.71	2.71	2.71	2.71	2.71	2.71	2.71	2.71	2.70	2.70	2.70	2.70	2.71	2.71	2.71	2.71
	-5	TC	11.14	11.14	11.26	11.38	11.76	11.76	11.76	11.76	12.04	12.04	12.04	12.04	12.84	12.84	12.84	12.84
		S/T	0.72	0.82	0.99	1.00	0.58	0.66	0.75	0.84	0.51	0.59	0.67	0.76	0.35	0.43	0.51	0.59
		PI	2.70	2.70	2.70	2.70	2.70	2.70	2.70	2.70	2.70	2.70	2.70	2.70	2.71	2.71	2.71	2.71
	0	TC	11.09	11.09	11.21	11.32	11.71	11.71	11.71	11.71	12.01	12.01	12.01	12.01	12.83	12.83	12.83	12.83
		S/T	0.73	0.82	1.00	1.00	0.58	0.67	0.75	0.84	0.51	0.60	0.68	0.76	0.35	0.43	0.51	0.59
		PI	2.71	2.71	2.71	2.71	2.71	2.71	2.71	2.71	2.71	2.71	2.71	2.71	2.72	2.72	2.72	2.72
	5	TC	11.03	11.03	11.15	11.27	11.67	11.67	11.67	11.67	11.97	11.97	11.97	11.97	12.82	12.82	12.82	12.82
		S/T	0.73	0.83	1.00	1.00	0.58	0.67	0.76	0.85	0.51	0.60	0.68	0.77	0.35	0.43	0.51	0.59
		PI	2.74	2.74	2.74	2.74	2.74	2.74	2.74	2.74	2.73	2.73	2.73	2.73	2.74	2.74	2.74	2.74
	10	TC	10.96	10.96	11.08	11.20	11.61	11.61	11.61	11.61	11.92	11.92	11.92	11.92	12.78	12.78	12.78	12.78
		S/T	0.73	0.83	1.00	1.00	0.58	0.67	0.76	0.85	0.51	0.60	0.68	0.77	0.36	0.44	0.51	0.59
		PI	2.78	2.78	2.78	2.78	2.78	2.78	2.78	2.78	2.77	2.77	2.77	2.77	2.78	2.78	2.78	2.78
	15	TC	10.87	10.87	10.99	11.11	11.54	11.54	11.54	11.54	11.85	11.85	11.85	11.85	12.73	12.73	12.73	12.73
		S/T	0.74	0.84	0.93	1.00	0.59	0.68	0.77	0.86	0.52	0.61	0.69	0.78	0.36	0.44	0.52	0.60
		PI	2.85	2.85	2.85	2.85	2.84	2.84	2.84	2.84	2.84	2.84	2.84	2.84	2.84	2.84	2.84	2.84
	20	TC	10.75	10.75	10.87	10.98	11.41	11.41	11.41	11.41	11.73	11.73	11.73	11.73	12.62	12.62	12.62	12.62
		S/T	0.74	0.84	0.93	1.00	0.59	0.68	0.77	0.86	0.52	0.61	0.69	0.78	0.36	0.44	0.52	0.60
		PI	2.95	2.95	2.95	2.95	2.94	2.94	2.94	2.94	2.93	2.93	2.93	2.93	2.92	2.92	2.92	2.92
	25	TC	10.26	10.26	10.38	10.49	10.90	10.90	10.90	10.90	11.21	11.21	11.21	11.21	12.07	12.07	12.07	12.07
		S/T	0.75	0.85	0.95	1.00	0.59	0.69	0.78	0.88	0.52	0.61	0.70	0.80	0.35	0.44	0.52	0.61
		PI	3.25	3.25	3.25	3.25	3.25	3.25	3.25	3.25	3.25	3.25	3.25	3.25	3.25	3.25	3.25	3.25
	30	TC	9.77	9.77	9.86	9.95	10.41	10.41	10.41	10.52	10.72	10.72	10.72	10.72	11.53	11.53	11.53	11.53
		S/T	0.76	0.87	0.97	1.00	0.60	0.70	0.80	0.89	0.52	0.62	0.71	0.81	0.35	0.44	0.53	0.62
		PI	3.56	3.56	3.56	3.56	3.57	3.57	3.57	3.57	3.57	3.57	3.57	3.57	3.59	3.59	3.59	3.59
	35	TC	9.29	9.37	9.46	9.54	9.89	9.89	9.89	9.98	10.18	10.18	10.35	10.18	10.98	10.98	10.98	10.98
		S/T	0.78	0.88	0.99	1.00	0.61	0.71	0.81	0.91	0.53	0.63	0.72	0.83	0.35	0.44	0.53	0.63
		PI	3.89	3.89	3.89	3.89	3.91	3.91	3.91	3.91	3.91	3.91	3.92	3.91	3.91	3.91	3.91	3.91
	40	TC	8.67	8.75	8.84	8.93	9.24	9.24	9.24	9.33	9.51	9.51	9.61	9.51	10.28	10.28	10.28	10.28
		S/T	0.80	0.92	1.00	1.00	0.62	0.73	0.85	0.96	0.53	0.64	0.76	0.87	0.34	0.44	0.54	0.65
		PI	4.29	4.29	4.29	4.29	4.32	4.32	4.32	4.32	4.32	4.32	4.33	4.32	4.34	4.34	4.34	4.34
	46	TC	8.03	8.12	8.20	8.29	8.57	8.57	8.57	8.66	8.83	8.83	8.83	8.83	9.57	9.57	9.57	9.57
		S/T	0.82	0.94	1.00	1.00	0.63	0.74	0.86	0.98	0.54	0.65	0.77	0.88	0.34	0.44	0.55	0.66
		PI	4.77	4.77	4.77	4.77	4.80	4.80	4.80	4.80	4.81	4.81	4.81	4.81	4.85	4.85	4.85	4.85
	50	TC	7.52	7.60	7.69	7.78	8.06	8.06	8.15	8.23	8.32	8.32	8.32	8.40	9.03	9.03	9.03	9.03
		S/T	0.84	0.97	1.00	1.00	0.64	0.76	0.89	1.00	0.54	0.67	0.79	0.91	0.33	0.45	0.56	0.91
		PI	5.17	5.17	5.17	5.17	5.19	5.19	5.19	5.19	5.21	5.21	5.21	5.21	5.25	5.25	5.25	5.25

1700	-15	TC	11.49	11.49	11.61	11.73	12.08	12.08	12.08	12.20	12.38	12.38	12.38	12.38	13.15	13.15	13.15	13.15
		S/T	0.73	0.83	1.00	1.00	0.58	0.68	0.76	0.98	0.50	0.60	0.69	0.78	0.34	0.42	0.51	0.60
		PI	2.77	2.77	2.77	2.77	2.77	2.77	2.77	2.77	2.76	2.76	2.76	2.76	2.76	2.76	2.76	2.76
	-10	TC	11.42	11.42	11.54	11.66	12.01	12.01	12.01	12.13	12.32	12.32	12.32	12.32	13.11	13.11	13.11	13.11
		S/T	0.74	0.83	1.00	1.00	0.58	0.68	0.77	0.98	0.50	0.60	0.69	0.79	0.34	0.43	0.51	0.60
		PI	2.76	2.76	2.76	2.76	2.76	2.76	2.76	2.76	2.76	2.76	2.76	2.76	2.76	2.76	2.76	2.76
	-5	TC	11.35	11.35	11.47	11.59	11.97	11.97	11.97	12.08	12.28	12.28	12.28	12.28	13.07	13.07	13.07	13.07
		S/T	0.74	0.84	1.00	1.00	0.59	0.68	0.77	0.99	0.51	0.60	0.69	0.79	0.34	0.43	0.52	0.60
		PI	2.76	2.76	2.76	2.76	2.76	2.76	2.76	2.76	2.76	2.76	2.76	2.76	2.77	2.77	2.77	2.77
	0	TC	11.29	11.29	11.41	11.53	11.92	11.92	11.92	12.04	12.24	12.24	12.24	12.24	13.06	13.06	13.06	13.06
		S/T	0.74	0.84	1.00	1.00	0.59	0.69	0.77	0.99	0.51	0.61	0.70	0.79	0.34	0.43	0.52	0.61
		PI	2.77	2.77	2.77	2.77	2.77	2.77	2.77	2.77	2.77	2.77	2.77	2.77	2.78	2.78	2.78	2.78
	5	TC	11.24	11.24	11.36	11.47	11.87	11.87	11.87	11.99	12.20	12.20	12.20	12.20	13.05	13.05	13.05	13.05
		S/T	0.75	0.85	1.00	1.00	0.59	0.69	0.78	1.00	0.51	0.61	0.70	0.80	0.34	0.43	0.52	0.61
		PI	2.79	2.79	2.79	2.79	2.79	2.79	2.79	2.79	2.79	2.79	2.79	2.79	2.80	2.80	2.80	2.80
	10	TC	11.17	11.17	11.29	11.40	11.82	11.82	11.82	11.94	12.15	12.15	12.15	12.15	13.02	13.02	13.02	13.02
		S/T	0.75	0.85	1.00	1.00	0.59	0.69	0.78	1.00	0.51	0.61	0.70	0.80	0.35	0.44	0.52	0.61
		PI	2.84	2.84	2.84	2.84	2.83	2.83	2.83	2.83	2.83	2.83	2.83	2.83	2.83	2.83	2.83	2.83
	15	TC	11.08	11.08	11.19	11.31	11.74	11.74	11.74	11.86	12.08	12.08	12.08	12.08	12.96	12.96	12.96	12.96
		S/T	0.76	0.86	0.96	1.00	0.60	0.70	0.79	0.89	0.52	0.62	0.71	0.81	0.35	0.44	0.53	0.62
		PI	2.91	2.91	2.91	2.91	2.90	2.90	2.90	2.90	2.89	2.89	2.89	2.89	2.89	2.89	2.89	2.89
	20	TC	10.95	10.95	11.07	11.18	11.61	11.61	11.61	11.73	11.96	11.96	11.96	11.96	12.85	12.85	12.85	12.85
		S/T	0.76	0.86	0.96	1.00	0.60	0.70	0.79	0.89	0.52	0.62	0.71	0.81	0.35	0.44	0.53	0.62
		PI	3.01	3.01	3.01	3.01	3.00	3.00	3.00	3.00	2.99	2.99	2.99	2.99	2.98	2.98	2.98	2.98
	25	TC	10.46	10.46	10.58	10.69	11.10	11.10	11.10	11.21	11.44	11.44	11.44	11.44	12.30	12.30	12.30	12.30
		S/T	0.77	0.88	0.98	1.00	0.60	0.71	0.81	0.91	0.53	0.63	0.73	0.83	0.35	0.44	0.53	0.62
		PI	3.31	3.31	3.31	3.31	3.31	3.31	3.31	3.31	3.31	3.31	3.31	3.31	3.31	3.31	3.31	3.31
	30	TC	9.98	10.06	10.18	10.29	10.61	10.61	10.61	10.72	10.92	10.92	10.92	10.92	11.76	11.76	11.76	11.76
		S/T	0.79	0.90	1.00	1.00	0.61	0.72	0.83	0.93	0.53	0.63	0.74	0.84	0.34	0.44	0.54	0.63
		PI	3.63	3.63	3.63	3.63	3.64	3.64	3.64	3.64	3.65	3.65	3.65	3.65	3.66	3.66	3.66	3.66
	35	TC	9.46	9.54	9.63	9.72	10.06	10.06	10.06	10.18	10.38	10.38	**10.55**	10.38	11.21	11.21	11.21	11.21
		S/T	0.80	0.92	1.00	1.00	0.62	0.73	0.85	0.95	0.53	0.64	**0.75**	0.86	0.34	0.44	0.54	0.65
		PI	3.97	3.97	3.97	3.97	3.99	3.99	3.99	3.99	3.99	3.99	**4.00**	3.99	4.02	4.02	4.02	4.02
	40	TC	8.83	8.91	9.00	9.08	9.40	9.40	9.44	9.54	9.70	9.70	9.79	9.74	10.50	10.50	10.50	10.50
		S/T	0.83	0.96	1.00	1.00	0.63	0.76	0.88	1.00	0.54	0.66	0.78	0.90	0.33	0.45	0.56	0.90
		PI	4.38	4.38	4.38	4.38	4.40	4.40	4.40	4.40	4.41	4.41	4.41	4.41	4.44	4.44	4.44	4.44
	46	TC	8.17	8.26	8.35	8.43	8.72	8.72	8.80	8.89	9.00	9.00	9.00	9.09	9.77	9.77	9.77	9.77
		S/T	0.85	0.98	1.00	1.00	0.64	0.77	0.90	1.00	0.55	0.67	0.80	0.92	0.33	0.45	0.56	0.92
		PI	4.87	4.87	4.87	4.87	4.89	4.89	4.89	4.89	4.91	4.91	4.91	4.91	4.95	4.95	4.95	4.95
	50	TC	7.66	7.75	7.83	7.92	8.20	8.20	8.29	8.37	8.49	8.49	8.49	8.57	9.20	9.20	9.20	9.20
		S/T	0.87	1.00	1.00	1.00	0.65	0.79	0.93	1.00	0.55	0.69	0.82	0.95	0.33	0.45	0.57	0.97
		PI	5.27	5.27	5.27	5.27	5.30	5.30	5.30	5.30	5.31	5.31	5.31	5.31	5.35	5.35	5.35	5.35

TC:Total Cooling Capacity (kW)

S/T:Sensible Cooling Capacity Ratio

PI:Power Input(kW)

Note: The table shows the case where the operation frequency of a compressor is fixed.

42k																		
INDOOR AIRFLOW (CMH)	OUTDOOR DB(℃)	ID WB (℃)	16.0				18.0				19.0				22.0			
		ID DB (℃)	23.0	25.0	27.0	29.0	23.0	25.0	27.0	29.0	23.0	25.0	27.0	29.0	23.0	25.0	27.0	29.0
1600	-15	TC	12.59	12.60	12.72	12.84	13.24	13.51	13.51	13.51	13.57	13.57	13.57	13.57	14.41	14.41	14.41	14.41
		S/T	0.70	0.79	0.87	0.96	0.56	0.64	0.72	0.81	0.50	0.58	0.66	0.73	0.35	0.42	0.49	0.57
		PI	2.80	2.80	2.80	2.80	2.80	2.80	2.80	2.80	2.79	2.79	2.79	2.79	2.79	2.79	2.79	2.79
	-10	TC	12.51	12.52	12.64	12.76	13.16	13.44	13.44	13.44	13.50	13.50	13.50	13.50	14.36	14.36	14.36	14.36
		S/T	0.71	0.80	0.87	0.96	0.56	0.65	0.73	0.82	0.50	0.58	0.66	0.74	0.35	0.43	0.49	0.57
		PI	2.79	2.79	2.79	2.79	2.79	2.79	2.79	2.79	2.78	2.78	2.78	2.78	2.79	2.79	2.79	2.79
	-5	TC	12.44	12.45	12.57	12.69	13.11	13.39	13.39	13.39	13.45	13.45	13.45	13.45	14.32	14.32	14.32	14.32
		S/T	0.71	0.80	0.88	0.97	0.57	0.65	0.73	0.82	0.51	0.59	0.66	0.74	0.35	0.43	0.50	0.58
		PI	2.79	2.78	2.78	2.79	2.79	2.79	2.79	2.79	2.78	2.78	2.78	2.78	2.80	2.80	2.80	2.80
	0	TC	12.38	12.39	12.50	12.62	13.06	13.34	13.34	13.34	13.41	13.41	13.41	13.41	14.31	14.31	14.31	14.31
		S/T	0.72	0.80	0.88	0.97	0.57	0.65	0.74	0.82	0.51	0.59	0.67	0.74	0.35	0.43	0.50	0.58
		PI	2.80	2.80	2.80	2.80	2.80	2.80	2.80	2.80	2.80	2.80	2.80	2.80	2.81	2.81	2.81	2.81
	5	TC	12.31	12.32	12.44	12.56	13.02	13.28	13.28	13.28	13.37	13.37	13.37	13.37	14.30	14.30	14.30	14.30
		S/T	0.72	0.81	0.89	0.98	0.57	0.66	0.74	0.83	0.51	0.59	0.67	0.75	0.35	0.43	0.50	0.58
		PI	2.82	2.82	2.82	2.82	2.82	2.82	2.82	2.82	2.82	2.82	2.82	2.82	2.83	2.83	2.83	2.83
	10	TC	12.24	12.25	12.37	12.48	12.95	13.22	13.22	13.22	13.31	13.31	13.31	13.31	14.26	14.26	14.26	14.26
		S/T	0.72	0.81	0.89	0.98	0.57	0.66	0.74	0.83	0.51	0.59	0.67	0.75	0.36	0.44	0.50	0.58
		PI	2.87	2.87	2.87	2.87	2.86	2.86	2.86	2.86	2.86	2.86	2.86	2.86	2.86	2.86	2.86	2.86
	15	TC	12.14	12.15	12.27	12.38	12.87	13.13	13.13	13.13	13.23	13.23	13.23	13.23	14.20	14.20	14.20	14.20
		S/T	0.73	0.82	0.90	0.99	0.58	0.66	0.75	0.84	0.52	0.60	0.68	0.76	0.36	0.44	0.51	0.59
		PI	2.94	2.94	2.94	2.94	2.93	2.93	2.93	2.93	2.92	2.92	2.92	2.92	2.92	2.92	2.92	2.92
	20	TC	12.00	12.01	12.13	12.24	12.73	12.73	12.73	12.73	13.10	13.10	13.10	13.10	14.08	14.08	14.08	14.08
		S/T	0.73	0.82	0.90	0.99	0.58	0.67	0.75	0.84	0.52	0.60	0.68	0.76	0.36	0.44	0.51	0.59
		PI	3.04	3.04	3.04	3.04	3.03	3.03	3.03	3.03	3.02	3.02	3.02	3.02	3.01	3.01	3.01	3.01
	25	TC	11.44	11.44	11.55	11.67	12.16	12.16	12.16	12.16	12.53	12.53	12.53	12.53	13.48	13.48	13.48	13.48
		S/T	0.74	0.83	0.92	1.00	0.59	0.67	0.76	0.85	0.52	0.60	0.69	0.77	0.36	0.44	0.52	0.60
		PI	3.35	3.35	3.35	3.35	3.35	3.35	3.35	3.35	3.35	3.35	3.35	3.35	3.35	3.35	3.35	3.35
	30	TC	10.92	10.92	11.03	11.15	11.61	11.61	11.61	11.61	11.95	11.95	11.95	11.95	12.87	12.87	12.87	12.87
		S/T	0.75	0.84	0.94	1.00	0.59	0.68	0.78	0.87	0.52	0.61	0.70	0.79	0.35	0.44	0.52	0.60
		PI	3.67	3.67	3.67	3.67	3.68	3.68	3.68	3.68	3.68	3.68	3.68	3.68	3.70	3.70	3.70	3.70
	35	TC	10.37	10.37	10.49	10.60	11.03	11.03	11.03	11.15	11.38	11.38	11.55	11.38	12.27	12.27	12.27	12.27
		S/T	0.76	0.86	0.96	1.00	0.60	0.69	0.79	0.88	0.52	0.62	0.71	0.81	0.35	0.44	0.52	0.61
		PI	4.01	4.01	4.01	4.01	4.03	4.03	4.03	4.03	4.03	4.03	4.04	4.03	4.06	4.06	4.06	4.06
	40	TC	9.68	9.71	9.82	9.92	10.32	10.32	10.32	10.42	10.65	10.65	10.74	10.65	11.49	11.49	11.49	11.49
		S/T	0.78	0.89	1.00	1.00	0.61	0.72	0.82	0.92	0.53	0.63	0.74	0.84	0.34	0.44	0.54	0.63
		PI	4.43	4.43	4.43	4.43	4.44	4.44	4.44	4.44	4.45	4.45	4.46	4.45	4.49	4.49	4.49	4.49
	46	TC	8.95	9.03	9.12	9.20	9.57	9.57	9.57	9.66	9.89	9.89	9.89	9.89	10.68	10.68	10.68	10.68
		S/T	0.80	0.91	1.00	1.00	0.62	0.73	0.84	0.94	0.53	0.64	0.75	0.86	0.34	0.44	0.54	0.64
		PI	4.92	4.92	4.92	4.92	4.94	4.94	4.94	4.94	4.96	4.96	4.96	4.96	5.00	5.00	5.00	5.00
	50	TC	8.40	8.49	8.57	8.66	8.97	8.97	8.97	9.06	9.29	9.29	9.29	9.29	10.06	10.06	10.06	10.06
		S/T	0.82	0.94	1.00	1.00	0.63	0.74	0.86	0.98	0.54	0.65	0.77	0.88	0.34	0.44	0.55	0.66
		PI	5.33	5.33	5.33	5.33	5.35	5.35	5.35	5.35	5.36	5.36	5.36	5.36	5.41	5.41	5.41	5.41
1750	-15	TC	12.84	12.84	12.96	13.08	13.51	13.51	13.51	13.51	13.84	13.84	13.84	13.84	14.71	14.71	14.71	14.71
		S/T	0.71	0.81	0.98	1.00	0.57	0.66	0.74	0.83	0.50	0.59	0.67	0.75	0.35	0.42	0.50	0.58
		PI	2.86	2.86	2.86	2.86	2.85	2.85	2.85	2.85	2.85	2.85	2.85	2.85	2.84	2.84	2.84	2.84
	-10	TC	12.77	12.77	12.89	13.01	13.44	13.44	13.44	13.44	13.77	13.77	13.77	13.77	14.66	14.66	14.66	14.66
		S/T	0.72	0.82	0.99	1.00	0.57	0.66	0.75	0.83	0.50	0.59	0.67	0.76	0.35	0.43	0.50	0.58
		PI	2.84	2.84	2.84	2.84	2.84	2.84	2.84	2.84	2.84	2.84	2.84	2.84	2.85	2.85	2.85	2.85
	-5	TC	12.69	12.69	12.81	12.93	13.39	13.39	13.39	13.39	13.72	13.72	13.72	13.72	14.62	14.62	14.62	14.62
		S/T	0.72	0.82	0.99	1.00	0.58	0.66	0.75	0.84	0.51	0.59	0.67	0.76	0.35	0.43	0.51	0.59
		PI	2.84	2.84	2.84	2.84	2.84	2.84	2.84	2.84	2.84	2.84	2.84	2.84	2.85	2.85	2.85	2.85
	0	TC	12.63	12.63	12.75	12.86	13.34	13.34	13.34	13.34	13.68	13.68	13.68	13.68	14.61	14.61	14.61	14.61
		S/T	0.73	0.82	1.00	1.00	0.58	0.67	0.75	0.84	0.51	0.60	0.68	0.76	0.35	0.43	0.51	0.59
		PI	2.85	2.85	2.85	2.85	2.85	2.85	2.85	2.85	2.85	2.85	2.85	2.85	2.86	2.86	2.86	2.86
	5	TC	12.56	12.56	12.68	12.80	13.28	13.28	13.28	13.28	13.64	13.64	13.64	13.64	14.60	14.60	14.60	14.60
		S/T	0.73	0.83	1.00	1.00	0.58	0.67	0.76	0.85	0.51	0.60	0.68	0.77	0.35	0.43	0.51	0.59
		PI	2.88	2.88	2.88	2.88	2.88	2.88	2.88	2.88	2.87	2.87	2.87	2.87	2.88	2.88	2.88	2.88
	10	TC	12.49	12.49	12.60	12.72	13.22	13.22	13.22	13.22	13.58	13.58	13.58	13.58	14.56	14.56	14.56	14.56
		S/T	0.73	0.83	1.00	1.00	0.58	0.67	0.76	0.85	0.51	0.60	0.68	0.77	0.36	0.44	0.51	0.59
		PI	2.93	2.93	2.93	2.93	2.92	2.92	2.92	2.92	2.92	2.92	2.92	2.92	2.92	2.92	2.92	2.92
	15	TC	12.39	12.39	12.50	12.62	13.13	13.13	13.13	13.13	13.50	13.50	13.50	13.50	14.50	14.50	14.50	14.50
		S/T	0.74	0.84	0.93	1.00	0.59	0.68	0.77	0.86	0.52	0.61	0.69	0.78	0.36	0.44	0.52	0.60
		PI	3.00	3.00	3.00	3.00	2.99	2.99	2.99	2.99	2.98	2.98	2.98	2.98	2.98	2.98	2.98	2.98
	20	TC	12.25	12.25	12.36	12.48	12.99	12.99	12.99	12.99	13.37	13.37	13.37	13.37	14.37	14.37	14.37	14.37
		S/T	0.74	0.84	0.93	1.00	0.59	0.68	0.77	0.86	0.52	0.61	0.69	0.78	0.36	0.44	0.52	0.60
		PI	3.10	3.10	3.10	3.10	3.09	3.09	3.09	3.09	3.08	3.08	3.08	3.08	3.07	3.07	3.07	3.07
	25	TC	11.67	11.67	11.79	11.90	12.42	12.42	12.42	12.42	12.79	12.79	12.79	12.79	13.74	13.74	13.74	13.74
		S/T	0.75	0.85	0.95	1.00	0.59	0.69	0.78	0.88	0.52	0.61	0.70	0.80	0.35	0.44	0.52	0.61
		PI	3.41	3.41	3.41	3.41	3.41	3.41	3.41	3.41	3.41	3.41	3.41	3.41	3.41	3.41	3.41	3.41
	30	TC	11.13	11.13	11.24	11.36	11.84	11.84	11.84	11.96	12.19	12.19	12.19	12.19	13.14	13.14	13.14	13.14
		S/T	0.76	0.87	0.97	1.00	0.60	0.70	0.80	0.89	0.52	0.62	0.72	0.81	0.35	0.44	0.53	0.62
		PI	3.74	3.74	3.74	3.74	3.75	3.75	3.75	3.75	3.76	3.76	3.76	3.76	3.77	3.77	3.77	3.77
	35	TC	10.58	10.69	10.81	10.92	11.27	11.27	11.27	11.38	11.61	11.61	11.79	11.61	12.53	12.53	12.53	12.53
		S/T	0.78	0.88	0.99	1.00	0.61	0.71	0.81	0.91	0.53	0.63	0.72	0.83	0.35	0.44	0.53	0.63
		PI	4.09	4.09	4.09	4.09	4.11	4.11	4.11	4.11	4.11	4.11	4.12	4.11	4.11	4.11	4.11	4.11
	40	TC	9.96	10.07	10.17	10.27	10.61	10.61	10.61	10.72	10.95	10.95	11.04	11.00	11.84	11.84	11.84	11.84
		S/T	0.81	0.92	1.00	1.00	0.62	0.73	0.85	0.96	0.53	0.65	0.76	0.87	0.34	0.44	0.54	0.65
		PI	4.52	4.52	4.52	4.52	4.54	4.54	4.54	4.54	4.55	4.55	4.56	4.55	4.57	4.57	4.57	4.57
	46	TC	9.23	9.31	9.40	9.49	9.83	9.83	9.83	9.92	10.15	10.15	10.15	10.26	11.01	11.01	11.01	11.01
		S/T	0.82	0.94	1.00	1.00	0.63	0.75	0.87	0.98	0.54	0.65	0.77	0.88	0.34	0.44	0.55	0.66
		PI	5.03	5.03	5.03	5.03	5.05	5.05	5.05	5.05	5.07	5.07	5.07	5.07	5.11	5.11	5.11	5.11
	50	TC	8.65	8.74	8.82	8.91	9.26	9.26	9.34	9.43	9.54	9.54	9.54	9.63	10.35	10.35	10.35	10.35
		S/T	0.84	0.97	1.00	1.00	0.64	0.76	0.89	1.00	0.55	0.67	0.79	0.91	0.33	0.45	0.56	0.91
		PI	5.45	5.45	5.45	5.45	5.47	5.47	5.47	5.47	5.48	5.48	5.48	5.48	5.53	5.53	5.53	5.53

1900	-15	TC	13.08	13.08	13.20	13.33	13.78	13.78	13.78	13.78	14.11	14.11	14.11	14.11	14.97	14.97	14.97	14.97
		S/T	0.73	0.83	1.00	1.00	0.58	0.67	0.76	0.98	0.50	0.60	0.69	0.77	0.34	0.42	0.50	0.59
		PI	2.91	2.91	2.91	2.91	2.91	2.91	2.91	2.91	2.90	2.90	2.90	2.90	2.90	2.90	2.90	2.90
	-10	TC	13.01	13.01	13.13	13.25	13.70	13.70	13.70	13.70	14.04	14.04	14.04	14.04	14.92	14.92	14.92	14.92
		S/T	0.74	0.83	1.00	1.00	0.58	0.67	0.77	0.98	0.50	0.60	0.69	0.78	0.34	0.43	0.50	0.59
		PI	2.90	2.90	2.90	2.90	2.90	2.90	2.90	2.90	2.89	2.89	2.89	2.89	2.90	2.90	2.90	2.90
	-5	TC	12.93	12.93	13.05	13.17	13.65	13.65	13.65	13.65	13.99	13.99	13.99	13.99	14.89	14.89	14.89	14.89
		S/T	0.74	0.84	1.00	1.00	0.59	0.67	0.77	0.99	0.51	0.60	0.69	0.78	0.34	0.43	0.51	0.59
		PI	2.89	2.89	2.89	2.89	2.89	2.89	2.89	2.89	2.89	2.89	2.89	2.89	2.91	2.91	2.91	2.91
	0	TC	12.86	12.86	12.98	13.10	13.60	13.60	13.60	13.60	13.95	13.95	13.95	13.95	14.87	14.87	14.87	14.87
		S/T	0.74	0.84	1.00	1.00	0.59	0.68	0.77	0.99	0.51	0.61	0.70	0.78	0.34	0.43	0.51	0.60
		PI	2.90	2.90	2.90	2.90	2.91	2.91	2.91	2.91	2.91	2.91	2.91	2.91	2.92	2.92	2.92	2.92
	5	TC	12.80	12.80	12.92	13.04	13.55	13.55	13.55	13.55	13.90	13.90	13.90	13.90	14.86	14.86	14.86	14.86
		S/T	0.75	0.85	1.00	1.00	0.59	0.68	0.78	1.00	0.51	0.61	0.70	0.79	0.34	0.43	0.51	0.60
		PI	2.93	2.93	2.93	2.93	2.93	2.93	2.93	2.93	2.93	2.93	2.93	2.93	2.94	2.94	2.94	2.94
	10	TC	12.72	12.72	12.84	12.96	13.48	13.48	13.48	13.48	13.85	13.85	13.85	13.85	14.82	14.82	14.82	14.82
		S/T	0.75	0.85	1.00	1.00	0.59	0.68	0.78	1.00	0.51	0.61	0.70	0.79	0.35	0.44	0.51	0.60
		PI	2.98	2.98	2.98	2.98	2.98	2.98	2.98	2.98	2.97	2.97	2.97	2.97	2.98	2.98	2.98	2.98
	15	TC	12.62	12.62	12.73	12.85	13.39	13.39	13.39	13.39	13.76	13.76	13.76	13.76	14.76	14.76	14.76	14.76
		S/T	0.76	0.86	0.96	1.00	0.60	0.69	0.79	0.88	0.52	0.62	0.71	0.80	0.35	0.44	0.52	0.61
		PI	3.05	3.05	3.05	3.05	3.05	3.05	3.05	3.05	3.04	3.04	3.04	3.04	3.04	3.04	3.04	3.04
	20	TC	12.48	12.48	12.59	12.71	13.25	13.25	13.25	13.25	13.63	13.63	13.63	13.63	14.63	14.63	14.63	14.63
		S/T	0.76	0.86	0.96	1.00	0.60	0.69	0.79	0.88	0.52	0.62	0.71	0.80	0.35	0.44	0.52	0.61
		PI	3.16	3.16	3.16	3.16	3.15	3.15	3.15	3.15	3.14	3.14	3.14	3.14	3.13	3.13	3.13	3.13
	25	TC	11.90	11.90	12.02	12.13	12.65	12.65	12.65	12.76	13.02	13.02	13.02	13.02	14.03	14.03	14.03	14.03
		S/T	0.77	0.87	0.98	1.00	0.60	0.70	0.80	0.90	0.52	0.62	0.72	0.82	0.35	0.44	0.53	0.62
		PI	3.48	3.48	3.48	3.48	3.48	3.48	3.48	3.48	3.48	3.48	3.48	3.48	3.48	3.48	3.48	3.48
	30	TC	11.36	11.47	11.59	11.70	12.07	12.07	12.07	12.19	12.45	12.45	12.45	12.45	13.40	13.40	13.40	13.40
		S/T	0.78	0.89	0.99	1.00	0.61	0.71	0.82	0.92	0.53	0.63	0.73	0.84	0.34	0.44	0.53	0.63
		PI	3.82	3.82	3.82	3.82	3.82	3.82	3.82	3.82	3.83	3.83	3.83	3.83	3.85	3.85	3.85	3.85
	35	TC	10.78	10.90	11.01	11.13	11.47	11.47	11.47	11.59	11.84	11.84	**12.02**	11.84	12.76	12.76	12.76	12.76
		S/T	0.79	0.91	1.00	1.00	0.62	0.73	0.84	0.94	0.53	0.64	**0.74**	0.86	0.34	0.44	0.54	0.64
		PI	4.17	4.17	4.17	4.17	4.19	4.19	4.19	4.19	4.19	4.19	**4.20**	4.19	4.22	4.22	4.22	4.22
	40	TC	10.15	10.25	10.36	10.46	10.82	10.82	10.86	10.97	11.16	11.16	11.26	11.22	12.06	12.06	12.06	12.06
		S/T	0.83	0.95	1.00	1.00	0.63	0.75	0.87	0.99	0.54	0.66	0.78	0.89	0.34	0.44	0.55	0.90
		PI	4.61	4.61	4.61	4.61	4.63	4.63	4.63	4.63	4.63	4.63	4.64	4.63	4.67	4.67	4.67	4.67
	46	TC	9.40	9.49	9.57	9.66	10.03	10.03	10.12	10.23	10.35	10.35	10.35	10.46	11.21	11.21	11.21	11.21
		S/T	0.84	0.97	1.00	1.00	0.64	0.77	0.89	1.00	0.55	0.67	0.79	0.91	0.33	0.45	0.56	0.92
		PI	5.13	5.13	5.13	5.13	5.15	5.15	5.15	5.15	5.16	5.16	5.16	5.16	5.21	5.21	5.21	5.21
	50	TC	8.82	8.91	9.00	9.08	9.43	9.43	9.51	9.60	9.74	9.74	9.74	9.83	10.58	10.58	10.58	10.58
		S/T	0.86	1.00	1.00	1.00	0.65	0.79	0.92	1.00	0.55	0.68	0.81	0.94	0.33	0.45	0.57	0.97
		PI	5.55	5.55	5.55	5.55	5.57	5.57	5.57	5.57	5.59	5.59	5.59	5.59	5.63	5.63	5.63	5.63

TC:Total Cooling Capacity (kW)

S/T:Sensible Cooling Capacity Ratio

PI:Power Input(kW)

Note: The table shows the case where the operation frequency of a compressor is fixed.

48k																		
INDOOR AIRFLOW (CMH)	OUTDOOR DB(℃)	ID WB (℃)	16.0				18.0				19.0				22.0			
		ID DB (℃)	23.0	25.0	27.0	29.0	23.0	25.0	27.0	29.0	23.0	25.0	27.0	29.0	23.0	25.0	27.0	29.0
1600	-15	TC	14.70	14.69	14.69	14.84	15.46	15.79	15.79	15.79	15.84	15.84	15.84	15.84	16.83	16.83	16.83	16.83
		S/T	0.68	0.75	0.82	0.90	0.55	0.62	0.70	0.76	0.49	0.56	0.63	0.70	0.36	0.42	0.48	0.55
		PI	3.10	3.10	3.10	3.10	3.09	3.09	3.09	3.09	3.09	3.09	3.09	3.09	3.09	3.09	3.09	3.09
	-10	TC	14.61	14.60	14.60	14.75	15.37	15.71	15.71	15.71	15.76	15.76	15.76	15.76	16.77	16.77	16.77	16.77
		S/T	0.68	0.76	0.82	0.90	0.55	0.62	0.70	0.77	0.49	0.56	0.63	0.70	0.36	0.43	0.49	0.55
		PI	3.09	3.08	3.08	3.09	3.09	3.09	3.09	3.09	3.08	3.08	3.08	3.08	3.09	3.09	3.09	3.09
	-5	TC	14.52	14.51	14.51	14.66	15.31	15.65	15.65	15.65	15.70	15.70	15.70	15.70	16.73	16.73	16.73	16.73
		S/T	0.68	0.76	0.83	0.91	0.56	0.63	0.70	0.77	0.50	0.57	0.63	0.70	0.36	0.43	0.49	0.56
		PI	3.08	3.08	3.08	3.08	3.08	3.08	3.08	3.08	3.08	3.08	3.08	3.08	3.09	3.09	3.09	3.09
	0	TC	14.45	14.44	14.44	14.59	15.26	15.59	15.59	15.59	15.66	15.66	15.66	15.66	16.71	16.71	16.71	16.71
		S/T	0.69	0.76	0.83	0.91	0.56	0.63	0.71	0.77	0.50	0.57	0.64	0.71	0.36	0.43	0.49	0.56
		PI	3.09	3.09	3.09	3.09	3.09	3.09	3.09	3.09	3.09	3.09	3.09	3.09	3.11	3.11	3.11	3.11
	5	TC	14.38	14.37	14.37	14.51	15.20	15.53	15.53	15.53	15.61	15.61	15.61	15.61	16.70	16.70	16.70	16.70
		S/T	0.69	0.77	0.84	0.92	0.56	0.63	0.71	0.78	0.50	0.57	0.64	0.71	0.36	0.43	0.49	0.56
		PI	3.12	3.12	3.12	3.12	3.12	3.12	3.12	3.12	3.12	3.12	3.12	3.12	3.13	3.13	3.13	3.13
	10	TC	14.29	14.28	14.28	14.43	15.13	15.45	15.45	15.45	15.54	15.54	15.54	15.54	16.66	16.66	16.66	16.66
		S/T	0.69	0.77	0.84	0.92	0.56	0.64	0.71	0.78	0.50	0.57	0.64	0.71	0.37	0.44	0.50	0.56
		PI	3.17	3.17	3.17	3.17	3.17	3.17	3.17	3.17	3.17	3.17	3.17	3.17	3.17	3.17	3.17	3.17
	15	TC	14.18	14.16	14.16	14.31	15.02	15.35	15.35	15.35	15.45	15.45	15.45	15.45	16.59	16.59	16.59	16.59
		S/T	0.70	0.78	0.85	0.93	0.57	0.64	0.72	0.79	0.51	0.58	0.65	0.72	0.37	0.44	0.50	0.57
		PI	3.25	3.25	3.25	3.25	3.24	3.24	3.24	3.24	3.24	3.24	3.24	3.24	3.24	3.24	3.24	3.24
	20	TC	14.02	14.00	14.00	14.15	14.87	14.87	14.87	14.87	15.30	15.30	15.30	15.30	16.44	16.44	16.44	16.44
		S/T	0.70	0.78	0.85	0.93	0.57	0.64	0.72	0.79	0.51	0.58	0.65	0.72	0.37	0.44	0.50	0.57
		PI	3.37	3.36	3.36	3.37	3.35	3.35	3.35	3.35	3.34	3.34	3.34	3.34	3.33	3.33	3.33	3.33
	25	TC	13.37	13.37	13.37	13.52	14.21	14.21	14.21	14.21	14.64	14.64	14.64	14.64	15.73	15.73	15.73	15.73
		S/T	0.71	0.79	0.87	0.94	0.57	0.65	0.73	0.80	0.51	0.59	0.66	0.73	0.37	0.44	0.51	0.57
		PI	3.71	3.71	3.71	3.71	3.71	3.71	3.71	3.71	3.71	3.71	3.71	3.71	3.71	3.71	3.71	3.71
	30	TC	12.74	12.74	12.74	12.86	13.55	13.55	13.55	13.55	13.95	13.95	13.95	13.95	15.04	15.04	15.04	15.04
		S/T	0.72	0.80	0.88	0.96	0.58	0.66	0.74	0.81	0.51	0.59	0.67	0.74	0.37	0.44	0.51	0.58
		PI	4.06	4.06	4.06	4.06	4.07	4.07	4.07	4.07	4.07	4.07	4.07	4.07	4.09	4.09	4.09	4.09
	35	TC	12.11	12.11	12.23	12.34	12.89	12.89	12.89	12.89	13.29	13.29	13.49	13.29	14.32	14.32	14.32	14.32
		S/T	0.72	0.81	0.90	0.98	0.58	0.66	0.75	0.83	0.51	0.60	0.67	0.76	0.36	0.44	0.51	0.59
		PI	4.44	4.44	4.44	4.44	4.45	4.45	4.45	4.45	4.46	4.46	4.47	4.46	4.49	4.49	4.49	4.49
	40	TC	11.40	11.40	11.51	11.62	12.13	12.13	12.13	12.13	12.52	12.52	12.63	12.52	13.52	13.52	13.52	13.52
		S/T	0.74	0.84	0.94	1.00	0.59	0.68	0.77	0.86	0.52	0.61	0.70	0.78	0.35	0.44	0.52	0.60
		PI	4.90	4.90	4.90	4.90	4.92	4.92	4.92	4.92	4.93	4.93	4.94	4.93	4.96	4.96	4.96	4.96
	46	TC	10.55	10.55	10.67	10.78	11.24	11.24	11.24	11.24	11.61	11.61	11.61	11.61	12.59	12.59	12.59	12.59
		S/T	0.75	0.86	0.95	1.00	0.59	0.69	0.79	0.88	0.52	0.61	0.71	0.80	0.35	0.44	0.52	0.61
		PI	5.45	5.45	5.45	5.45	5.47	5.47	5.47	5.47	5.49	5.49	5.49	5.49	5.53	5.53	5.53	5.53
	50	TC	9.89	9.89	9.98	10.06	10.58	10.58	10.58	10.69	10.92	10.92	10.92	10.92	11.84	11.84	11.84	11.84
		S/T	0.77	0.88	0.98	1.00	0.60	0.70	0.80	0.90	0.52	0.62	0.72	0.82	0.35	0.44	0.53	0.62
		PI	5.90	5.90	5.90	5.90	5.92	5.92	5.92	5.92	5.94	5.94	5.94	5.94	5.99	5.99	5.99	5.99
1750	-15	TC	15.02	15.02	15.02	15.17	15.79	15.79	15.79	15.79	16.17	16.17	16.17	16.17	17.19	17.19	17.19	17.19
		S/T	0.69	0.76	0.98	1.00	0.56	0.63	0.70	0.78	0.49	0.57	0.64	0.71	0.36	0.42	0.49	0.56
		PI	3.16	3.16	3.16	3.16	3.16	3.16	3.16	3.16	3.15	3.15	3.15	3.15	3.14	3.14	3.14	3.14
	-10	TC	14.94	14.94	14.94	15.08	15.71	15.71	15.71	15.71	16.09	16.09	16.09	16.09	17.13	17.13	17.13	17.13
		S/T	0.69	0.77	0.99	1.00	0.56	0.63	0.71	0.79	0.49	0.57	0.64	0.72	0.36	0.43	0.49	0.56
		PI	3.15	3.15	3.15	3.15	3.15	3.15	3.15	3.15	3.15	3.15	3.15	3.15	3.15	3.15	3.15	3.15
	-5	TC	14.85	14.85	14.85	14.99	15.65	15.65	15.65	15.65	16.03	16.03	16.03	16.03	17.09	17.09	17.09	17.09
		S/T	0.69	0.77	0.99	1.00	0.57	0.63	0.71	0.79	0.50	0.58	0.64	0.72	0.36	0.43	0.50	0.57
		PI	3.14	3.14	3.14	3.14	3.15	3.15	3.15	3.15	3.15	3.15	3.15	3.15	3.15	3.15	3.15	3.15
	0	TC	14.77	14.77	14.77	14.92	15.59	15.59	15.59	15.59	15.99	15.99	15.99	15.99	17.07	17.07	17.07	17.07
		S/T	0.70	0.77	1.00	1.00	0.57	0.64	0.72	0.79	0.50	0.58	0.65	0.73	0.36	0.43	0.50	0.57
		PI	3.16	3.16	3.16	3.16	3.16	3.16	3.16	3.16	3.16	3.16	3.16	3.16	3.16	3.16	3.16	3.16
	5	TC	14.70	14.70	14.70	14.84	15.53	15.53	15.53	15.53	15.94	15.94	15.94	15.94	17.06	17.06	17.06	17.06
		S/T	0.70	0.78	1.00	1.00	0.57	0.64	0.72	0.80	0.50	0.58	0.65	0.73	0.36	0.43	0.50	0.57
		PI	3.19	3.19	3.19	3.19	3.19	3.19	3.19	3.19	3.18	3.18	3.18	3.18	3.19	3.19	3.19	3.19
	10	TC	14.61	14.61	14.61	14.75	15.45	15.45	15.45	15.45	15.87	15.87	15.87	15.87	17.01	17.01	17.01	17.01
		S/T	0.70	0.78	1.00	1.00	0.57	0.64	0.72	0.80	0.50	0.58	0.65	0.73	0.37	0.44	0.50	0.57
		PI	3.24	3.24	3.24	3.24	3.23	3.23	3.23	3.23	3.23	3.23	3.23	3.23	3.23	3.23	3.23	3.23
	15	TC	14.49	14.49	14.49	14.63	15.35	15.35	15.35	15.35	15.77	15.77	15.77	15.77	16.94	16.94	16.94	16.94
		S/T	0.71	0.79	0.87	0.95	0.58	0.65	0.73	0.81	0.51	0.59	0.66	0.74	0.37	0.44	0.51	0.58
		PI	3.32	3.32	3.32	3.32	3.31	3.31	3.31	3.31	3.31	3.31	3.31	3.31	3.30	3.30	3.30	3.30
	20	TC	14.33	14.33	14.33	14.47	15.19	15.19	15.19	15.19	15.62	15.62	15.62	15.62	16.80	16.80	16.80	16.80
		S/T	0.71	0.79	0.87	0.95	0.58	0.65	0.73	0.81	0.51	0.59	0.66	0.74	0.37	0.44	0.51	0.58
		PI	3.43	3.43	3.43	3.43	3.42	3.42	3.42	3.42	3.41	3.41	3.41	3.41	3.39	3.39	3.39	3.39
	25	TC	13.67	13.67	13.81	13.95	14.50	14.50	14.50	14.50	14.93	14.93	14.93	14.93	16.08	16.08	16.08	16.08
		S/T	0.72	0.80	0.89	0.97	0.58	0.66	0.74	0.82	0.51	0.59	0.67	0.75	0.36	0.44	0.51	0.58
		PI	3.79	3.79	3.79	3.79	3.78	3.78	3.78	3.78	3.78	3.78	3.78	3.78	3.79	3.79	3.79	3.79
	30	TC	13.01	13.01	13.15	13.29	13.84	13.84	13.84	13.84	14.27	14.27	14.27	14.27	15.36	15.36	15.36	15.36
		S/T	0.73	0.82	0.90	0.99	0.58	0.67	0.75	0.84	0.52	0.60	0.68	0.76	0.36	0.44	0.51	0.59
		PI	4.14	4.14	4.14	4.14	4.15	4.15	4.15	4.15	4.16	4.16	4.16	4.16	4.17	4.17	4.17	4.17
	35	TC	12.37	12.37	12.49	12.60	13.15	13.15	13.15	13.15	13.58	13.58	13.78	13.58	14.64	14.64	14.64	14.64
		S/T	0.74	0.83	0.92	1.00	0.59	0.68	0.77	0.86	0.52	0.60	0.69	0.78	0.36	0.44	0.52	0.60
		PI	4.53	4.53	4.53	4.53	4.54	4.54	4.54	4.54	4.55	4.55	4.56	4.55	4.55	4.55	4.55	4.55
	40	TC	11.66	11.66	11.78	11.89	12.42	12.42	12.42	12.48	12.83	12.83	12.94	12.83	13.85	13.85	13.85	13.85
		S/T	0.76	0.86	0.96	1.00	0.60	0.70	0.79	0.89	0.52	0.62	0.71	0.81	0.35	0.44	0.52	0.61
		PI	5.00	5.00	5.00	5.00	5.02	5.02	5.02	5.02	5.03	5.03	5.03	5.03	5.05	5.05	5.05	5.05
	46	TC	10.78	10.78	10.90	11.01	11.53	11.53	11.53	11.64	11.90	11.90	11.90	11.90	12.88	12.88	12.88	12.88
		S/T	0.77	0.88	0.98	1.00	0.60	0.70	0.81	0.90	0.53	0.62	0.72	0.82	0.35	0.44	0.53	0.62
		PI	5.56	5.56	5.56	5.56	5.58	5.58	5.58	5.58	5.60	5.60	5.60	5.60	5.64	5.64	5.64	5.64
	50	TC	10.12	10.24	10.35	10.47	10.84	10.84	10.84	10.95	11.18	11.18	11.18	11.18	12.13	12.13	12.13	12.13
		S/T	0.79	0.90	1.00	1.00	0.61	0.72	0.83	0.93	0.53	0.63	0.74	0.84	0.34	0.44	0.54	0.91
		PI	6.02	6.02	6.02	6.02	6.04	6.04	6.04	6.04	6.06	6.06	6.06	6.06	6.11	6.11	6.11	6.11

1900	-15	TC	15.33	15.33	15.48	15.63	16.12	16.12	16.12	16.12	16.53	16.53	16.53	16.53	17.54	17.54	17.54	17.54
		S/T	0.70	0.78	1.00	1.00	0.56	0.64	0.71	0.98	0.49	0.57	0.65	0.72	0.35	0.42	0.49	0.56
		PI	3.23	3.23	3.23	3.23	3.21	3.21	3.21	3.21	3.22	3.22	3.22	3.22	3.21	3.21	3.21	3.21
	-10	TC	15.23	15.23	15.38	15.53	16.03	16.03	16.03	16.03	16.45	16.45	16.45	16.45	17.48	17.48	17.48	17.48
		S/T	0.70	0.79	1.00	1.00	0.56	0.64	0.72	0.98	0.49	0.57	0.65	0.73	0.35	0.43	0.49	0.56
		PI	3.21	3.21	3.21	3.21	3.20	3.20	3.20	3.20	3.21	3.21	3.21	3.21	3.21	3.21	3.21	3.21
	-5	TC	15.14	15.14	15.29	15.44	15.97	15.97	15.97	15.97	16.38	16.38	16.38	16.38	17.44	17.44	17.44	17.44
		S/T	0.70	0.79	1.00	1.00	0.57	0.64	0.72	0.99	0.50	0.58	0.65	0.73	0.35	0.43	0.50	0.57
		PI	3.21	3.21	3.21	3.21	3.20	3.20	3.20	3.20	3.21	3.21	3.21	3.21	3.21	3.21	3.21	3.21
	0	TC	15.07	15.07	15.22	15.36	15.91	15.91	15.91	15.91	16.34	16.34	16.34	16.34	17.42	17.42	17.42	17.42
		S/T	0.71	0.79	1.00	1.00	0.57	0.65	0.73	0.99	0.50	0.58	0.66	0.74	0.35	0.43	0.50	0.57
		PI	3.22	3.22	3.22	3.22	3.21	3.21	3.21	3.21	3.22	3.22	3.22	3.22	3.23	3.23	3.23	3.23
	5	TC	14.99	14.99	15.14	15.29	15.85	15.85	15.85	15.85	16.29	16.29	16.29	16.29	17.41	17.41	17.41	17.41
		S/T	0.71	0.80	1.00	1.00	0.57	0.65	0.73	1.00	0.50	0.58	0.66	0.74	0.35	0.43	0.50	0.57
		PI	3.25	3.25	3.25	3.25	3.24	3.24	3.24	3.24	3.25	3.25	3.25	3.25	3.25	3.25	3.25	3.25
	10	TC	14.90	14.90	15.05	15.19	15.78	15.78	15.78	15.78	16.22	16.22	16.22	16.22	17.36	17.36	17.36	17.36
		S/T	0.71	0.80	1.00	1.00	0.57	0.65	0.73	1.00	0.50	0.58	0.66	0.74	0.36	0.44	0.50	0.57
		PI	3.30	3.30	3.30	3.30	3.29	3.29	3.29	3.29	3.30	3.30	3.30	3.30	3.29	3.29	3.29	3.29
	15	TC	14.78	14.78	14.93	15.07	15.67	15.67	15.67	15.67	16.12	16.12	16.12	16.12	17.29	17.29	17.29	17.29
		S/T	0.72	0.81	0.89	0.97	0.58	0.66	0.74	0.83	0.51	0.59	0.67	0.75	0.36	0.44	0.51	0.58
		PI	3.38	3.38	3.38	3.38	3.37	3.37	3.37	3.37	3.37	3.37	3.37	3.37	3.36	3.36	3.36	3.36
	20	TC	14.61	14.61	14.76	14.90	15.50	15.50	15.50	15.50	15.96	15.96	15.96	15.96	17.14	17.14	17.14	17.14
		S/T	0.72	0.81	0.89	0.97	0.58	0.66	0.74	0.83	0.51	0.59	0.67	0.75	0.36	0.44	0.51	0.58
		PI	3.50	3.50	3.50	3.50	3.48	3.48	3.48	3.48	3.48	3.48	3.48	3.48	3.46	3.46	3.46	3.46
	25	TC	13.95	13.95	14.10	14.24	14.81	14.81	14.81	14.81	15.25	15.25	15.25	15.25	16.42	16.42	16.42	16.42
		S/T	0.73	0.82	0.91	0.99	0.58	0.67	0.76	0.84	0.52	0.60	0.68	0.77	0.36	0.44	0.51	0.59
		PI	3.86	3.86	3.86	3.86	3.86	3.86	3.86	3.86	3.86	3.86	3.86	3.86	3.86	3.86	3.86	3.86
	30	TC	13.29	13.29	13.44	13.58	14.13	14.13	14.13	14.13	14.56	14.56	14.56	14.56	15.68	15.68	15.68	15.68
		S/T	0.74	0.84	0.93	1.00	0.59	0.68	0.77	0.86	0.52	0.61	0.69	0.78	0.36	0.44	0.52	0.60
		PI	4.22	4.22	4.22	4.22	4.23	4.23	4.23	4.23	4.24	4.24	4.24	4.24	4.26	4.26	4.26	4.26
	35	TC	12.63	12.63	12.75	12.86	13.44	13.44	13.44	13.44	13.87	13.87	**14.07**	13.87	14.96	14.96	14.96	14.96
		S/T	0.75	0.85	0.95	1.00	0.59	0.69	0.78	0.88	0.52	0.61	**0.70**	0.80	0.35	0.44	0.52	0.61
		PI	4.62	4.62	4.62	4.62	4.63	4.63	4.63	4.63	4.64	4.64	**4.65**	4.64	4.67	4.67	4.67	4.67
	40	TC	11.91	11.96	12.07	12.19	12.69	12.69	12.69	12.74	13.09	13.09	13.20	13.09	14.14	14.14	14.14	14.14
		S/T	0.78	0.88	0.99	1.00	0.61	0.71	0.81	0.91	0.53	0.63	0.73	0.83	0.35	0.44	0.53	0.90
		PI	5.10	5.10	5.10	5.10	5.11	5.11	5.11	5.11	5.13	5.13	5.13	5.13	5.17	5.17	5.17	5.17
	46	TC	11.01	11.13	11.24	11.36	11.76	11.76	11.76	11.87	12.13	12.13	12.13	12.13	13.14	13.14	13.14	13.14
		S/T	0.79	0.90	1.00	1.00	0.61	0.72	0.83	0.93	0.53	0.63	0.74	0.85	0.34	0.44	0.54	0.92
		PI	5.67	5.67	5.67	5.67	5.69	5.69	5.69	5.69	5.71	5.71	5.71	5.71	5.76	5.76	5.76	5.76
	50	TC	10.35	10.47	10.58	10.70	11.07	11.07	11.07	11.18	11.41	11.41	11.41	11.41	12.39	12.39	12.39	12.39
		S/T	0.81	0.93	1.00	1.00	0.62	0.74	0.85	0.96	0.54	0.65	0.76	0.87	0.34	0.44	0.55	0.97
		PI	6.14	6.14	6.14	6.14	6.16	6.16	6.16	6.16	6.18	6.18	6.18	6.18	6.23	6.23	6.23	6.23

TC:Total Cooling Capacity (kW)

S/T:Sensible Cooling Capacity Ratio

PI:Power Input(kW)

Note: The table shows the case where the operation frequency of a compressor is fixed.

55k																			
INDOOR AIRFLOW (CMH)	OUTDOOR DB(℃)	ID WB (℃)	16.0				18.0				19.0				22.0				
		ID DB (℃)	23.0	25.0	27.0	29.0	23.0	25.0	27.0	29.0	23.0	25.0	27.0	29.0	23.0	25.0	27.0	29.0	
1650	-15	TC	15.98	15.98	15.98	16.13	16.80	17.13	17.13	17.13	17.20	17.20	17.20	17.20	18.27	18.27	18.27	18.27	
		S/T	0.67	0.74	0.81	0.88	0.55	0.62	0.69	0.75	0.49	0.56	0.63	0.69	0.37	0.42	0.48	0.54	
		PI	3.33	3.33	3.33	3.33	3.32	3.32	3.32	3.32	3.32	3.32	3.32	3.32	3.31	3.31	3.31	3.31	
	-10	TC	15.88	15.88	15.88	16.03	16.71	17.04	17.04	17.04	17.12	17.12	17.12	17.12	18.21	18.21	18.21	18.21	
		S/T	0.67	0.75	0.82	0.88	0.55	0.62	0.69	0.76	0.49	0.56	0.63	0.69	0.37	0.43	0.49	0.54	
		PI	3.31	3.32	3.32	3.31	3.31	3.31	3.31	3.31	3.31	3.31	3.31	3.31	3.32	3.32	3.32	3.32	
	-5	TC	15.79	15.79	15.79	15.94	16.64	16.97	16.97	16.97	17.05	17.05	17.05	17.05	18.16	18.16	18.16	18.16	
		S/T	0.67	0.75	0.82	0.89	0.56	0.62	0.69	0.76	0.50	0.57	0.63	0.69	0.37	0.43	0.49	0.55	
		PI	3.31	3.31	3.31	3.31	3.31	3.31	3.31	3.31	3.31	3.31	3.31	3.31	3.32	3.32	3.32	3.32	
	0	TC	15.71	15.71	15.71	15.86	16.58	16.91	16.91	16.91	17.01	17.01	17.01	17.01	18.14	18.14	18.14	18.14	
		S/T	0.68	0.75	0.82	0.89	0.56	0.63	0.70	0.76	0.50	0.57	0.64	0.70	0.37	0.43	0.49	0.55	
		PI	3.32	3.32	3.32	3.32	3.32	3.32	3.32	3.32	3.33	3.33	3.33	3.33	3.33	3.33	3.33	3.33	
	5	TC	15.63	15.63	15.63	15.78	16.52	16.85	16.85	16.85	16.95	16.95	16.95	16.95	18.13	18.13	18.13	18.13	
		S/T	0.68	0.76	0.83	0.90	0.56	0.63	0.70	0.77	0.50	0.57	0.64	0.70	0.37	0.43	0.49	0.55	
		PI	3.35	3.35	3.35	3.35	3.35	3.35	3.35	3.35	3.35	3.35	3.35	3.35	3.36	3.36	3.36	3.36	
	10	TC	15.53	15.53	15.53	15.68	16.44	16.77	16.77	16.77	16.88	16.88	16.88	16.88	18.08	18.08	18.08	18.08	
		S/T	0.68	0.76	0.83	0.90	0.56	0.63	0.70	0.77	0.50	0.57	0.64	0.70	0.38	0.44	0.50	0.55	
		PI	3.41	3.41	3.41	3.41	3.40	3.40	3.40	3.40	3.40	3.40	3.40	3.40	3.40	3.40	3.40	3.40	
	15	TC	15.41	15.41	15.41	15.55	16.33	16.65	16.65	16.65	16.78	16.78	16.78	16.78	18.01	18.01	18.01	18.01	
		S/T	0.69	0.77	0.84	0.91	0.57	0.64	0.71	0.78	0.51	0.58	0.65	0.71	0.38	0.44	0.50	0.56	
		PI	3.49	3.49	3.49	3.49	3.48	3.48	3.48	3.48	3.48	3.48	3.48	3.48	3.47	3.47	3.47	3.47	
	20	TC	15.23	15.23	15.23	15.38	16.15	16.15	16.15	16.15	16.61	16.61	16.61	16.61	17.85	17.85	17.85	17.85	
		S/T	0.69	0.77	0.84	0.91	0.57	0.64	0.71	0.78	0.51	0.58	0.65	0.71	0.38	0.44	0.50	0.56	
		PI	3.61	3.62	3.62	3.61	3.60	3.60	3.60	3.60	3.60	3.60	3.60	3.60	3.58	3.58	3.58	3.58	
	25	TC	14.54	14.54	14.54	14.69	15.44	15.44	15.44	15.44	15.90	15.90	15.90	15.90	17.10	17.10	17.10	17.10	
		S/T	0.70	0.78	0.85	0.92	0.57	0.64	0.72	0.79	0.51	0.58	0.65	0.72	0.37	0.44	0.50	0.57	
		PI	3.98	3.98	3.98	3.98	3.98	3.98	3.98	3.98	3.98	3.98	3.98	3.98	3.98	3.98	3.98	3.98	
	30	TC	13.85	13.85	13.85	14.00	14.72	14.72	14.72	14.72	15.18	15.18	15.18	15.18	16.36	16.36	16.36	16.36	
		S/T	0.71	0.79	0.87	0.94	0.57	0.65	0.72	0.80	0.51	0.59	0.66	0.73	0.37	0.44	0.50	0.57	
		PI	4.36	4.36	4.36	4.36	4.37	4.37	4.37	4.37	4.37	4.37	4.37	4.37	4.39	4.39	4.39	4.39	
	35	TC	13.17	13.17	13.17	13.31	14.00	14.00	14.00	14.00	14.43	14.43	14.66	14.43	15.58	15.58	15.58	15.58	
		S/T	0.72	0.80	0.88	0.96	0.58	0.66	0.74	0.81	0.51	0.59	0.66	0.74	0.37	0.44	0.51	0.58	
		PI	4.77	4.77	4.77	4.77	4.78	4.78	4.78	4.78	4.79	4.79	4.80	4.79	4.82	4.82	4.82	4.82	
	40	TC	12.41	12.41	12.46	12.59	13.22	13.22	13.22	13.22	13.64	13.64	13.76	13.64	14.74	14.74	14.74	14.74	
		S/T	0.73	0.83	0.91	1.00	0.58	0.67	0.76	0.85	0.52	0.60	0.68	0.77	0.36	0.44	0.51	0.59	
		PI	5.26	5.26	5.26	5.26	5.27	5.27	5.27	5.27	5.28	5.28	5.29	5.28	5.32	5.32	5.32	5.32	
	46	TC	11.49	11.49	11.60	11.72	12.26	12.26	12.26	12.26	12.67	12.67	12.67	12.67	13.70	13.70	13.70	13.70	
		S/T	0.74	0.84	0.93	1.00	0.59	0.68	0.77	0.86	0.52	0.61	0.69	0.78	0.36	0.44	0.52	0.60	
		PI	5.84	5.84	5.84	5.84	5.87	5.87	5.87	5.87	5.88	5.88	5.88	5.88	5.93	5.93	5.93	5.93	
	50	TC	10.77	10.77	10.88	11.00	11.51	11.51	11.51	11.51	11.92	11.92	11.92	11.92	12.90	12.90	12.90	12.90	
		S/T	0.76	0.86	0.96	1.00	0.60	0.69	0.79	0.88	0.52	0.61	0.71	0.80	0.35	0.44	0.52	0.61	
		PI	6.33	6.33	6.33	6.33	6.35	6.35	6.35	6.35	6.37	6.37	6.37	6.37	6.42	6.42	6.42	6.42	
1850	-15	TC	16.28	16.28	16.28	16.43	17.13	17.13	17.13	17.13	17.57	17.57	17.57	17.57	18.66	18.66	18.66	18.66	
		S/T	0.69	0.76	0.98	1.00	0.55	0.63	0.70	0.77	0.49	0.57	0.64	0.70	0.36	0.42	0.48	0.55	
		PI	3.40	3.40	3.40	3.40	3.39	3.39	3.39	3.39	3.39	3.39	3.39	3.39	3.38	3.38	3.38	3.38	
	-10	TC	16.19	16.19	16.19	16.34	17.04	17.04	17.04	17.04	17.48	17.48	17.48	17.48	18.59	18.59	18.59	18.59	
		S/T	0.69	0.77	0.99	1.00	0.55	0.63	0.71	0.78	0.49	0.57	0.64	0.71	0.36	0.43	0.49	0.55	
		PI	3.38	3.38	3.38	3.38	3.38	3.38	3.38	3.38	3.38	3.38	3.38	3.38	3.38	3.38	3.38	3.38	
	-5	TC	16.09	16.09	16.09	16.24	16.97	16.97	16.97	16.97	17.41	17.41	17.41	17.41	18.55	18.55	18.55	18.55	
		S/T	0.69	0.77	0.99	1.00	0.56	0.63	0.71	0.78	0.50	0.58	0.64	0.71	0.36	0.43	0.49	0.56	
		PI	3.38	3.38	3.38	3.38	3.38	3.38	3.38	3.38	3.38	3.38	3.38	3.38	3.39	3.39	3.39	3.39	
	0	TC	16.01	16.01	16.01	16.16	16.91	16.91	16.91	16.91	17.37	17.37	17.37	17.37	18.53	18.53	18.53	18.53	
		S/T	0.70	0.77	1.00	1.00	0.56	0.64	0.72	0.78	0.50	0.58	0.65	0.72	0.36	0.43	0.49	0.56	
		PI	3.39	3.39	3.39	3.39	3.39	3.39	3.39	3.39	3.39	3.39	3.39	3.39	3.40	3.40	3.40	3.40	
	5	TC	15.93	15.93	15.93	16.08	16.85	16.85	16.85	16.85	17.31	17.31	17.31	17.31	18.52	18.52	18.52	18.52	
		S/T	0.70	0.78	1.00	1.00	0.56	0.64	0.72	0.79	0.50	0.58	0.65	0.72	0.36	0.43	0.49	0.56	
		PI	3.42	3.42	3.42	3.42	3.42	3.42	3.42	3.42	3.42	3.42	3.42	3.42	3.42	3.42	3.42	3.42	
	10	TC	15.83	15.83	15.83	15.98	16.77	16.77	16.77	16.77	17.24	17.24	17.24	17.24	18.47	18.47	18.47	18.47	
		S/T	0.70	0.78	1.00	1.00	0.56	0.64	0.72	0.79	0.50	0.58	0.65	0.72	0.37	0.44	0.50	0.56	
		PI	3.48	3.48	3.48	3.48	3.47	3.47	3.47	3.47	3.47	3.47	3.47	3.47	3.47	3.47	3.47	3.47	
	15	TC	15.70	15.70	15.70	15.85	16.65	16.65	16.65	16.65	17.13	17.13	17.13	17.13	18.39	18.39	18.39	18.39	
		S/T	0.71	0.79	0.87	0.94	0.57	0.65	0.73	0.80	0.51	0.59	0.66	0.73	0.37	0.44	0.50	0.57	
		PI	3.56	3.56	3.56	3.56	3.56	3.56	3.56	3.56	3.55	3.55	3.55	3.55	3.54	3.54	3.54	3.54	
	20	TC	15.53	15.53	15.53	15.67	16.48	16.48	16.48	16.48	16.97	16.97	16.97	16.97	18.23	18.23	18.23	18.23	
		S/T	0.71	0.79	0.87	0.94	0.57	0.65	0.73	0.80	0.51	0.59	0.66	0.73	0.37	0.44	0.50	0.57	
		PI	3.69	3.69	3.69	3.69	3.68	3.68	3.68	3.68	3.67	3.67	3.67	3.67	3.65	3.65	3.65	3.65	
	25	TC	14.81	14.81	14.81	14.95	15.73	15.73	15.73	15.73	16.22	16.22	16.22	16.22	17.45	17.45	17.45	17.45	
		S/T	0.71	0.80	0.88	0.96	0.58	0.66	0.74	0.81	0.51	0.59	0.67	0.74	0.37	0.44	0.51	0.58	
		PI	4.07	4.07	4.07	4.07	4.06	4.06	4.06	4.06	4.06	4.06	4.06	4.06	4.07	4.07	4.07	4.07	
	30	TC	14.12	14.12	14.26	14.41	15.01	15.01	15.01	15.01	15.47	15.47	15.47	15.47	16.68	16.68	16.68	16.68	
		S/T	0.72	0.81	0.90	0.98	0.58	0.66	0.75	0.83	0.51	0.59	0.67	0.76	0.36	0.44	0.51	0.58	
		PI	4.45	4.45	4.45	4.45	4.46	4.46	4.46	4.46	4.47	4.47	4.47	4.47	4.48	4.48	4.48	4.48	
	35	TC	13.40	13.40	13.54	13.69	14.29	14.29	14.29	14.29	14.72	14.72	14.95	14.72	15.87	15.87	15.87	15.87	
		S/T	0.73	0.83	0.91	1.00	0.59	0.67	0.76	0.85	0.52	0.60	0.68	0.77	0.36	0.44	0.51	0.59	
		PI	4.86	4.86	4.86	4.86	4.88	4.88	4.88	4.88	4.89	4.89	4.90	4.89	4.89	4.89	4.89	4.89	
	40	TC	12.62	12.62	12.75	12.88	13.46	13.46	13.46	13.51	13.87	13.87	14.00	13.87	14.98	14.98	14.98	14.98	
		S/T	0.75	0.86	0.95	1.00	0.59	0.69	0.79	0.88	0.52	0.61	0.71	0.80	0.35	0.44	0.52	0.61	
		PI	5.37	5.37	5.37	5.37	5.39	5.39	5.39	5.39	5.41	5.41	5.41	5.41	5.43	5.43	5.43	5.43	
	46	TC	11.69	11.69	11.81	11.92	12.47	12.47	12.47	12.58	12.87	12.87	12.87	12.87	13.93	13.93	13.93	13.93	
		S/T	0.76	0.87	0.97	1.00	0.60	0.70	0.80	0.89	0.52	0.62	0.72	0.81	0.35	0.44	0.53	0.62	
		PI	5.97	5.97	5.97	5.97	6.00	6.00	6.00	6.00	6.02	6.02	6.02	6.02	6.07	6.07	6.07	6.07	
	50	TC	10.98	11.09	11.21	11.32	11.72	11.72	11.72	11.84	12.12	12.12	12.12	12.12	13.13	13.13	13.13	13.13	
		S/T	0.78	0.89	1.00	1.00	0.61	0.71	0.82	0.92	0.53	0.63	0.73	0.83	0.34	0.44	0.53	0.91	
		PI	6.47	6.47	6.47	6.47	6.50	6.50	6.50	6.50	6.51	6.51	6.51	6.51	6.57	6.57	6.57	6.57	

2000	-15	TC	16.62	16.62	16.80	16.98	17.46	17.46	17.46	17.46	17.89	17.89	17.89	17.89	19.01	19.01	19.01	19.01
		S/T	0.70	0.77	1.00	1.00	0.56	0.64	0.71	0.98	0.49	0.57	0.65	0.72	0.35	0.42	0.49	0.56
		PI	3.47	3.47	3.47	3.47	3.45	3.45	3.45	3.45	3.45	3.45	3.45	3.45	3.45	3.45	3.45	3.45
	-10	TC	16.52	16.52	16.70	16.88	17.37	17.37	17.37	17.37	17.80	17.80	17.80	17.80	18.95	18.95	18.95	18.95
		S/T	0.70	0.78	1.00	1.00	0.56	0.64	0.72	0.98	0.49	0.57	0.65	0.73	0.35	0.43	0.49	0.56
		PI	3.45	3.45	3.45	3.45	3.45	3.45	3.45	3.45	3.44	3.44	3.44	3.44	3.45	3.45	3.45	3.45
	-5	TC	16.42	16.42	16.60	16.78	17.30	17.30	17.30	17.30	17.74	17.74	17.74	17.74	18.90	18.90	18.90	18.90
		S/T	0.70	0.78	1.00	1.00	0.57	0.64	0.72	0.99	0.50	0.58	0.65	0.73	0.35	0.43	0.50	0.57
		PI	3.45	3.45	3.45	3.45	3.44	3.44	3.44	3.44	3.44	3.44	3.44	3.44	3.46	3.46	3.46	3.46
	0	TC	16.34	16.34	16.51	16.69	17.23	17.23	17.23	17.23	17.69	17.69	17.69	17.69	18.88	18.88	18.88	18.88
		S/T	0.71	0.78	1.00	1.00	0.57	0.65	0.73	0.99	0.50	0.58	0.66	0.74	0.35	0.43	0.50	0.57
		PI	3.46	3.46	3.46	3.46	3.45	3.45	3.45	3.45	3.46	3.46	3.46	3.46	3.47	3.47	3.47	3.47
	5	TC	16.25	16.25	16.43	16.61	17.17	17.17	17.17	17.17	17.63	17.63	17.63	17.63	18.87	18.87	18.87	18.87
		S/T	0.71	0.79	1.00	1.00	0.57	0.65	0.73	1.00	0.50	0.58	0.66	0.74	0.35	0.43	0.50	0.57
		PI	3.49	3.49	3.49	3.49	3.49	3.49	3.49	3.49	3.48	3.48	3.48	3.48	3.50	3.50	3.50	3.50
	10	TC	16.16	16.16	16.33	16.51	17.09	17.09	17.09	17.09	17.56	17.56	17.56	17.56	18.82	18.82	18.82	18.82
		S/T	0.71	0.79	1.00	1.00	0.57	0.65	0.73	1.00	0.50	0.58	0.66	0.74	0.36	0.44	0.50	0.57
		PI	3.55	3.55	3.55	3.55	3.54	3.54	3.54	3.54	3.54	3.54	3.54	3.54	3.54	3.54	3.54	3.54
	15	TC	16.02	16.02	16.20	16.37	16.97	16.97	16.97	16.97	17.45	17.45	17.45	17.45	18.74	18.74	18.74	18.74
		S/T	0.72	0.80	0.88	0.96	0.58	0.66	0.74	0.82	0.51	0.59	0.67	0.75	0.36	0.44	0.51	0.58
		PI	3.64	3.64	3.64	3.64	3.62	3.62	3.62	3.62	3.62	3.62	3.62	3.62	3.62	3.62	3.62	3.62
	20	TC	15.84	15.84	16.02	16.19	16.79	16.79	16.79	16.79	17.28	17.28	17.28	17.28	18.58	18.58	18.58	18.58
		S/T	0.72	0.80	0.88	0.96	0.58	0.66	0.74	0.82	0.51	0.59	0.67	0.75	0.36	0.44	0.51	0.58
		PI	3.76	3.76	3.76	3.76	3.75	3.75	3.75	3.75	3.74	3.74	3.74	3.74	3.73	3.73	3.73	3.73
	25	TC	15.10	15.10	15.24	15.38	16.05	16.05	16.05	16.05	16.53	16.53	16.53	16.53	17.77	17.77	17.77	17.77
		S/T	0.73	0.81	0.90	0.98	0.58	0.67	0.75	0.83	0.51	0.60	0.68	0.76	0.36	0.44	0.51	0.59
		PI	4.15	4.15	4.15	4.15	4.15	4.15	4.15	4.15	4.15	4.15	4.15	4.15	4.15	4.15	4.15	4.15
	30	TC	14.41	14.41	14.55	14.69	15.30	15.30	15.30	15.30	15.79	15.79	15.79	15.79	16.99	16.99	16.99	16.99
		S/T	0.73	0.83	0.92	1.00	0.59	0.67	0.76	0.85	0.52	0.60	0.69	0.77	0.36	0.44	0.52	0.59
		PI	4.54	4.54	4.54	4.54	4.55	4.55	4.55	4.55	4.56	4.56	4.56	4.56	4.58	4.58	4.58	4.58
	35	TC	13.66	13.66	13.80	13.95	14.55	14.55	14.55	14.55	15.01	15.01	**15.24**	15.01	16.19	16.19	16.19	16.19
		S/T	0.75	0.84	0.94	1.00	0.59	0.68	0.78	0.87	0.52	0.61	**0.69**	0.79	0.35	0.44	0.52	0.60
		PI	4.96	4.96	4.96	4.96	4.98	4.98	4.98	4.98	4.99	4.99	**5.00**	4.99	5.03	5.03	5.03	5.03
	40	TC	12.86	12.92	13.05	13.18	13.72	13.72	13.72	13.77	14.15	14.15	14.27	14.15	15.29	15.29	15.29	15.29
		S/T	0.77	0.88	0.98	1.00	0.60	0.70	0.80	0.90	0.52	0.62	0.72	0.82	0.35	0.44	0.53	0.90
		PI	5.48	5.48	5.48	5.48	5.50	5.50	5.50	5.50	5.51	5.51	5.52	5.51	5.56	5.56	5.56	5.56
	46	TC	11.92	12.04	12.15	12.27	12.73	12.73	12.73	12.84	13.13	13.13	13.13	13.13	14.22	14.22	14.22	14.22
		S/T	0.78	0.89	1.00	1.00	0.61	0.71	0.82	0.92	0.53	0.63	0.73	0.83	0.35	0.44	0.53	0.92
		PI	6.10	6.10	6.10	6.10	6.12	6.12	6.12	6.12	6.14	6.14	6.14	6.14	6.19	6.19	6.19	6.19
	50	TC	11.18	11.29	11.41	11.52	11.95	11.95	11.95	12.07	12.35	12.35	12.35	12.35	13.39	13.39	13.39	13.39
		S/T	0.80	0.92	1.00	1.00	0.62	0.73	0.84	0.95	0.53	0.64	0.75	0.86	0.34	0.44	0.54	0.97
		PI	6.60	6.60	6.60	6.60	6.63	6.63	6.63	6.63	6.65	6.65	6.65	6.65	6.70	6.70	6.70	6.70

TC:Total Cooling Capacity (kW)

S/T:Sensible Cooling Capacity Ratio

PI:Power Input(kW)

Note: The table shows the case where the operation frequency of a compressor is fixed.

7.2 Heating

24k									[SI_Unit]
INDOOR AIRFLOW (CMH)	HEATING PERFORMANCE AT INDOOR DRY BULB TEMPERATURE								
	OUTDOOR DB(°C)	TC:TOTAL CAPACITY IN KILOWATTS (KW)				PI:TOTAL POWER IN KILOWATTS (KW)			
		Indoor Conditions (DB °C)				Indoor Conditions (DB °C)			
		16.0	20.0	22.0	24.0	16.0	20.0	22.0	24.0
992	-15.0	5.23	5.18	5.16	5.11	2.30	2.38	2.33	2.33
	-10.0	5.59	5.53	5.51	5.45	2.45	2.54	2.48	2.49
	-7.0	5.85	5.80	5.77	5.71	2.61	2.70	2.64	2.65
	-5.6	6.00	5.94	5.91	5.85	2.53	2.55	2.55	2.56
	-2.8	6.11	6.06	6.03	5.97	2.39	2.40	2.40	2.41
	0.0	6.17	6.09	6.06	6.03	2.25	2.25	2.25	2.26
	2.8	6.46	6.38	6.32	6.29	2.12	2.12	2.12	2.12
	5.6	6.96	6.87	6.81	6.75	2.00	1.99	1.99	1.99
	7.0	7.48	7.39	7.24	7.19	1.94	1.86	1.92	1.92
	11.1	7.79	7.68	7.62	7.59	1.74	1.73	1.72	1.71
	13.9	8.05	7.94	7.88	7.85	1.61	1.59	1.57	1.56
	16.7	8.34	8.23	8.17	8.11	1.48	1.45	1.43	1.43
	18.0	8.46	8.34	8.29	8.23	1.43	1.39	1.38	1.36
1118	-15.0	5.33	5.28	5.23	5.20	2.32	2.40	2.34	2.35
	-10.0	5.69	5.63	5.58	5.55	2.47	2.56	2.50	2.51
	-7.0	5.96	5.90	5.85	5.82	2.63	2.72	2.66	2.67
	-5.6	6.11	6.06	6.00	5.97	2.55	2.57	2.58	2.59
	-2.8	6.23	6.17	6.14	6.09	2.41	2.42	2.43	2.43
	0.0	6.29	6.20	6.17	6.14	2.27	2.27	2.28	2.28
	2.8	6.58	6.49	6.43	6.40	2.14	2.14	2.14	2.14
	5.6	7.07	6.98	6.96	6.90	2.02	2.01	2.01	2.01
	7.0	7.63	7.53	7.39	7.33	1.96	1.88	1.95	1.94
	11.1	7.94	7.82	7.79	7.74	1.76	1.74	1.73	1.73
	13.9	8.23	8.11	8.05	8.00	1.63	1.61	1.59	1.58
	16.7	8.49	8.37	8.32	8.26	1.50	1.47	1.45	1.43
	18.0	8.63	8.52	8.46	8.40	1.43	1.41	1.39	1.37
1247	-15.0	5.39	5.34	5.31	5.29	2.33	2.42	2.37	2.38
	-10.0	5.75	5.70	5.67	5.64	2.49	2.58	2.53	2.54
	-7.0	6.03	5.97	5.94	5.91	2.65	2.75	2.69	2.70
	-5.6	6.17	6.11	6.09	6.06	2.58	2.59	2.60	2.61
	-2.8	6.32	6.23	6.20	6.17	2.43	2.44	2.45	2.46
	0.0	6.38	6.29	6.23	6.20	2.29	2.29	2.30	2.30
	2.8	6.64	6.55	6.52	6.46	2.16	2.16	2.16	2.16
	5.6	7.16	7.07	7.01	6.98	2.04	2.03	2.03	2.03
	7.0	7.71	7.62	7.48	7.42	1.98	1.90	1.97	1.96
	11.1	8.03	7.94	7.88	7.82	1.78	1.76	1.75	1.74
	13.9	8.32	8.20	8.14	8.08	1.65	1.62	1.61	1.60
	16.7	8.61	8.49	8.43	8.34	1.52	1.48	1.47	1.45
	18.0	8.75	8.61	8.55	8.49	1.45	1.43	1.41	1.39

Note: The table shows the case where the operation frequency of a compressor is fixed.

30k								[SI_Unit]
INDOOR AIRFLOW (CMH)	HEATING PERFORMANCE AT INDOOR DRY BULB TEMPERATURE							
	OUTDOOR DB(°C)	TC:TOTAL CAPACITY IN KILOWATTS (KW)				PI:TOTAL POWER IN KILOWATTS (KW)			
		Indoor Conditions (DB °C)				Indoor Conditions (DB °C)			
		16.0	20.0	22.0	24.0	16.0	20.0	22.0	24.0
1300	-15.0	5.65	5.57	5.55	5.50	2.29	2.37	2.36	2.38
	-10.0	6.03	5.95	5.92	5.87	2.45	2.53	2.52	2.54
	-7.0	6.32	6.23	6.21	6.15	2.60	2.69	2.68	2.70
	-5.6	6.64	6.55	6.52	6.46	2.57	2.62	2.64	2.67
	-2.8	6.93	6.84	6.81	6.75	2.51	2.56	2.58	2.61
	0.0	7.16	7.04	7.02	6.96	2.46	2.50	2.52	2.55
	2.8	7.65	7.54	7.48	7.42	2.42	2.47	2.49	2.51
	5.6	8.41	8.29	8.23	8.18	2.39	2.43	2.45	2.47
	7.0	9.24	9.12	8.86	8.80	2.38	2.41	2.44	2.46
	11.1	9.76	9.64	9.58	9.49	2.32	2.35	2.37	2.39
	13.9	10.25	10.10	10.05	9.99	2.27	2.31	2.32	2.34
	16.7	10.74	10.60	10.51	10.45	2.23	2.26	2.28	2.29
	18.0	10.98	10.83	10.74	10.69	2.21	2.24	2.25	2.27
1530	-15.0	5.74	5.69	5.64	5.62	2.32	2.39	2.39	2.41
	-10.0	6.13	6.08	6.02	6.00	2.47	2.55	2.55	2.57
	-7.0	6.42	6.37	6.31	6.28	2.63	2.71	2.71	2.73
	-5.6	6.75	6.70	6.64	6.61	2.59	2.64	2.67	2.69
	-2.8	7.07	6.99	6.96	6.90	2.54	2.58	2.61	2.63
	0.0	7.31	7.19	7.16	7.10	2.48	2.52	2.55	2.57
	2.8	7.80	7.68	7.62	7.57	2.45	2.49	2.51	2.53
	5.6	8.58	8.47	8.41	8.35	2.41	2.45	2.47	2.49
	7.0	9.42	9.29	9.03	8.97	2.40	2.43	2.46	2.48
	11.1	9.96	9.81	9.76	9.67	2.34	2.37	2.39	2.41
	13.9	10.45	10.31	10.22	10.16	2.29	2.32	2.34	2.36
	16.7	10.95	10.80	10.71	10.66	2.25	2.28	2.29	2.31
	18.0	11.18	11.03	10.95	10.86	2.22	2.25	2.27	2.29
1700	-15.0	5.83	5.75	5.73	5.68	2.34	2.42	2.41	2.42
	-10.0	6.22	6.14	6.12	6.06	2.49	2.58	2.57	2.59
	-7.0	6.52	6.44	6.41	6.35	2.65	2.74	2.73	2.75
	-5.6	6.84	6.75	6.73	6.67	2.62	2.67	2.69	2.71
	-2.8	7.16	7.07	7.02	6.99	2.56	2.61	2.63	2.65
	0.0	7.36	7.28	7.22	7.16	2.50	2.55	2.57	2.59
	2.8	7.86	7.77	7.71	7.65	2.47	2.51	2.53	2.55
	5.6	8.64	8.52	8.47	8.41	2.43	2.47	2.50	2.52
	7.0	9.51	9.38	9.12	9.06	2.42	2.45	2.48	2.50
	11.1	10.05	9.90	9.84	9.79	2.35	2.39	2.41	2.43
	13.9	10.54	10.39	10.34	10.25	2.31	2.34	2.36	2.38
	16.7	11.03	10.89	10.80	10.74	2.26	2.30	2.31	2.33
	18.0	11.27	11.12	11.03	10.98	2.24	2.27	2.29	2.30

Note: The table shows the case where the operation frequency of a compressor is fixed.

36k+MOD30U-36HFN8-QRD0W(GA)									[SI_Unit]
INDOOR AIRFLOW (CMH)	HEATING PERFORMANCE AT INDOOR DRY BULB TEMPERATURE								
	OUTDOOR DB(°C)	TC:TOTAL CAPACITY IN KILOWATTS (KW)				PI:TOTAL POWER IN KILOWATTS (KW)			
		Indoor Conditions (DB °C)				Indoor Conditions (DB °C)			
		16.0	20.0	22.0	24.0	16.0	20.0	22.0	24.0
1300	-15.0	7.98	7.90	7.85	7.80	3.44	3.57	3.50	3.51
	-10.0	8.52	8.44	8.38	8.33	3.67	3.80	3.73	3.75
	-7.0	8.92	8.84	8.78	8.73	3.90	4.04	3.96	3.98
	-5.6	9.07	8.98	8.93	8.87	3.80	3.83	3.85	3.87
	-2.8	9.19	9.07	9.04	8.98	3.62	3.64	3.66	3.67
	0.0	9.19	9.10	9.04	8.98	3.43	3.45	3.45	3.46
	2.8	9.53	9.42	9.36	9.30	3.27	3.28	3.28	3.29
	5.6	10.20	10.06	10.00	9.94	3.11	3.11	3.11	3.11
	7.0	10.94	10.79	10.62	10.53	3.03	2.94	3.03	3.03
	11.1	11.31	11.17	11.08	10.99	2.77	2.76	2.75	2.74
	13.9	11.63	11.49	11.40	11.31	2.60	2.58	2.57	2.55
	16.7	11.98	11.80	11.72	11.63	2.43	2.40	2.39	2.37
	18.0	12.15	11.98	11.89	11.78	2.35	2.32	2.30	2.28
1530	-15.0	8.15	8.07	8.04	7.99	3.48	3.60	3.53	3.55
	-10.0	8.70	8.62	8.59	8.53	3.71	3.84	3.77	3.79
	-7.0	9.11	9.03	9.00	8.94	3.94	4.08	4.00	4.02
	-5.6	9.24	9.16	9.13	9.07	3.83	3.87	3.89	3.90
	-2.8	9.39	9.27	9.22	9.16	3.65	3.68	3.69	3.70
	0.0	9.39	9.27	9.22	9.16	3.46	3.48	3.49	3.50
	2.8	9.74	9.62	9.56	9.48	3.30	3.31	3.32	3.32
	5.6	10.40	10.29	10.20	10.14	3.14	3.14	3.14	3.14
	7.0	11.15	11.02	10.82	10.76	3.06	2.97	3.06	3.06
	11.1	11.54	11.40	11.31	11.25	2.80	2.79	2.78	2.77
	13.9	11.89	11.72	11.66	11.57	2.62	2.60	2.59	2.58
	16.7	12.24	12.07	11.98	11.89	2.46	2.43	2.41	2.40
	18.0	12.41	12.21	12.12	12.04	2.37	2.34	2.32	2.30
1700	-15.0	8.24	8.16	8.11	8.06	3.51	3.64	3.57	3.58
	-10.0	8.80	8.71	8.66	8.61	3.75	3.88	3.80	3.82
	-7.0	9.21	9.13	9.07	9.01	3.98	4.12	4.04	4.06
	-5.6	9.36	9.27	9.22	9.16	3.87	3.91	3.92	3.94
	-2.8	9.48	9.39	9.33	9.27	3.69	3.71	3.72	3.73
	0.0	9.51	9.39	9.33	9.27	3.50	3.51	3.52	3.53
	2.8	9.85	9.71	9.65	9.59	3.33	3.34	3.35	3.35
	5.6	10.52	10.38	10.32	10.26	3.17	3.17	3.17	3.17
	7.0	11.29	11.14	10.93	10.88	3.09	3.00	3.09	3.09
	11.1	11.66	11.51	11.43	11.37	2.83	2.82	2.81	2.80
	13.9	12.01	11.86	11.78	11.69	2.65	2.63	2.62	2.61
	16.7	12.36	12.18	12.09	12.01	2.48	2.45	2.44	2.42
	18.0	12.53	12.36	12.27	12.15	2.40	2.36	2.35	2.33

Note: The table shows the case where the operation frequency of a compressor is fixed.

36k+MOD30U-36HFN8-RRD0W(GA)									[SI_Unit]
INDOOR AIRFLOW (CMH)	HEATING PERFORMANCE AT INDOOR DRY BULB TEMPERATURE								
	OUTDOOR DB(°C)	TC:TOTAL CAPACITY IN KILOWATTS (KW)				PI:TOTAL POWER IN KILOWATTS (KW)			
		Indoor Conditions (DB °C)				Indoor Conditions (DB °C)			
		16.0	20.0	22.0	24.0	16.0	20.0	22.0	24.0
1300	-15.0	7.80	7.73	7.68	7.65	3.40	3.53	3.46	3.47
	-10.0	8.33	8.25	8.20	8.17	3.63	3.76	3.69	3.71
	-7.0	8.73	8.64	8.59	8.56	3.86	4.00	3.92	3.94
	-5.6	8.91	8.82	8.76	8.73	3.76	3.80	3.81	3.83
	-2.8	9.05	8.96	8.91	8.85	3.58	3.61	3.62	3.63
	0.0	9.11	8.99	8.93	8.88	3.39	3.41	3.42	3.44
	2.8	9.49	9.34	9.28	9.22	3.24	3.25	3.26	3.27
	5.6	10.18	10.04	9.98	9.89	3.10	3.10	3.10	3.11
	7.0	10.95	10.79	10.59	10.53	3.02	2.94	3.03	3.03
	11.1	11.34	11.20	11.11	11.05	2.78	2.76	2.76	2.75
	13.9	11.72	11.54	11.46	11.40	2.61	2.59	2.58	2.57
	16.7	12.09	11.92	11.83	11.75	2.45	2.42	2.41	2.40
	18.0	12.27	12.09	12.01	11.92	2.37	2.34	2.32	2.31
1530	-15.0	7.95	7.88	7.83	7.80	3.45	3.57	3.50	3.52
	-10.0	8.49	8.41	8.36	8.33	3.68	3.80	3.73	3.75
	-7.0	8.90	8.81	8.76	8.73	3.91	4.04	3.97	3.99
	-5.6	9.08	8.99	8.93	8.91	3.80	3.84	3.86	3.88
	-2.8	9.25	9.14	9.08	9.02	3.62	3.65	3.66	3.67
	0.0	9.28	9.17	9.11	9.05	3.43	3.45	3.46	3.47
	2.8	9.69	9.54	9.49	9.43	3.28	3.29	3.29	3.30
	5.6	10.38	10.24	10.18	10.12	3.13	3.13	3.14	3.14
	7.0	11.18	11.02	10.82	10.73	3.06	2.97	3.06	3.06
	11.1	11.60	11.43	11.34	11.28	2.80	2.79	2.79	2.78
	13.9	11.98	11.80	11.72	11.63	2.63	2.61	2.60	2.59
	16.7	12.36	12.18	12.09	12.01	2.47	2.45	2.43	2.42
	18.0	12.53	12.36	12.27	12.18	2.39	2.36	2.34	2.33
1700	-15.0	8.04	7.96	7.91	7.88	3.48	3.60	3.53	3.55
	-10.0	8.58	8.50	8.45	8.42	3.71	3.84	3.77	3.79
	-7.0	8.99	8.91	8.85	8.82	3.95	4.09	4.01	4.03
	-5.6	9.17	9.08	9.02	8.99	3.84	3.88	3.90	3.92
	-2.8	9.34	9.22	9.17	9.14	3.66	3.69	3.70	3.71
	0.0	9.40	9.28	9.22	9.17	3.47	3.49	3.50	3.51
	2.8	9.78	9.66	9.57	9.51	3.31	3.32	3.33	3.34
	5.6	10.50	10.36	10.30	10.21	3.16	3.17	3.17	3.17
	7.0	11.29	11.14	10.93	10.85	3.09	3.00	3.09	3.09
	11.1	11.72	11.54	11.49	11.40	2.83	2.82	2.81	2.81
	13.9	12.09	11.92	11.83	11.75	2.66	2.64	2.63	2.62
	16.7	12.47	12.30	12.21	12.12	2.50	2.47	2.45	2.44
	18.0	12.67	12.47	12.38	12.30	2.41	2.38	2.36	2.35

Note: The table shows the case where the operation frequency of a compressor is fixed.

42k								[SI_Unit]
INDOOR AIRFLOW (CMH)	HEATING PERFORMANCE AT INDOOR DRY BULB TEMPERATURE							
	OUTDOOR DB(°C)	TC:TOTAL CAPACITY IN KILOWATTS (KW)				PI:TOTAL POWER IN KILOWATTS (KW)			
		Indoor Conditions (DB °C)				Indoor Conditions (DB °C)			
		16.0	20.0	22.0	24.0	16.0	20.0	22.0	24.0
1600	-15.0	8.18	8.08	8.03	7.98	3.39	3.50	3.49	3.53
	-10.0	8.73	8.62	8.57	8.52	3.61	3.73	3.72	3.76
	-7.0	9.15	9.03	8.98	8.92	3.84	3.97	3.96	4.00
	-5.6	9.59	9.47	9.41	9.35	3.80	3.87	3.91	3.95
	-2.8	10.02	9.91	9.85	9.79	3.72	3.80	3.83	3.87
	0.0	10.31	10.20	10.11	10.05	3.65	3.72	3.76	3.79
	2.8	11.01	10.86	10.81	10.72	3.61	3.68	3.72	3.75
	5.6	12.11	11.94	11.85	11.79	3.58	3.64	3.67	3.71
	7.0	13.27	13.08	12.73	12.64	3.57	3.62	3.66	3.69
	11.1	13.97	13.80	13.71	13.63	3.48	3.54	3.58	3.61
	13.9	14.67	14.50	14.38	14.29	3.43	3.49	3.52	3.55
	16.7	15.37	15.16	15.05	14.96	3.37	3.43	3.46	3.48
	18.0	15.71	15.48	15.40	15.28	3.35	3.40	3.43	3.46
1750	-15.0	8.34	8.24	8.19	8.14	3.42	3.53	3.53	3.55
	-10.0	8.90	8.80	8.74	8.69	3.65	3.77	3.76	3.79
	-7.0	9.32	9.21	9.16	9.10	3.88	4.00	4.00	4.03
	-5.6	9.79	9.67	9.62	9.56	3.83	3.91	3.95	3.99
	-2.8	10.23	10.11	10.02	9.96	3.76	3.83	3.87	3.91
	0.0	10.55	10.40	10.31	10.25	3.69	3.76	3.79	3.83
	2.8	11.24	11.10	11.01	10.92	3.65	3.72	3.75	3.79
	5.6	12.35	12.17	12.11	12.03	3.61	3.68	3.71	3.75
	7.0	13.53	13.34	12.96	12.87	3.60	3.66	3.70	3.73
	11.1	14.26	14.09	13.97	13.89	3.52	3.59	3.62	3.65
	13.9	14.96	14.79	14.67	14.58	3.47	3.53	3.56	3.59
	16.7	15.69	15.45	15.37	15.25	3.41	3.47	3.50	3.53
	18.0	16.00	15.80	15.69	15.57	3.39	3.44	3.47	3.50
1900	-15.0	8.41	8.31	8.26	8.21	3.46	3.57	3.56	3.60
	-10.0	8.98	8.87	8.82	8.77	3.69	3.81	3.80	3.84
	-7.0	9.41	9.30	9.24	9.19	3.92	4.05	4.04	4.08
	-5.6	9.88	9.76	9.70	9.64	3.87	3.95	3.99	4.03
	-2.8	10.31	10.20	10.14	10.08	3.80	3.88	3.91	3.95
	0.0	10.63	10.49	10.43	10.34	3.73	3.80	3.84	3.87
	2.8	11.36	11.21	11.13	11.04	3.69	3.76	3.79	3.83
	5.6	12.49	12.32	12.23	12.14	3.65	3.72	3.75	3.79
	7.0	13.67	13.48	13.10	13.02	3.64	3.70	3.74	3.78
	11.1	14.44	14.24	14.15	14.03	3.56	3.62	3.66	3.69
	13.9	15.13	14.93	14.84	14.73	3.51	3.57	3.60	3.63
	16.7	15.86	15.66	15.54	15.42	3.45	3.51	3.54	3.57
	18.0	16.21	15.98	15.86	15.77	3.43	3.48	3.51	3.54

Note: The table shows the case where the operation frequency of a compressor is fixed.

48k									[SI_Unit]
INDOOR AIRFLOW (CMH)	HEATING PERFORMANCE AT INDOOR DRY BULB TEMPERATURE								
	OUTDOOR DB(°C)	TC:TOTAL CAPACITY IN KILOWATTS (KW)				PI:TOTAL POWER IN KILOWATTS (KW)			
		Indoor Conditions (DB °C)				Indoor Conditions (DB °C)			
		16.0	20.0	22.0	24.0	16.0	20.0	22.0	24.0
1600	-15.0	10.93	10.83	10.76	10.71	4.72	4.88	4.81	4.85
	-10.0	11.68	11.57	11.49	11.43	5.03	5.20	5.13	5.17
	-7.0	12.23	12.12	12.03	11.98	5.35	5.53	5.46	5.50
	-5.6	12.55	12.44	12.35	12.29	5.24	5.31	5.35	5.39
	-2.8	12.84	12.70	12.64	12.55	5.05	5.12	5.15	5.18
	0.0	12.99	12.81	12.76	12.67	4.86	4.92	4.95	4.98
	2.8	13.60	13.42	13.34	13.22	4.72	4.77	4.80	4.82
	5.6	14.67	14.47	14.38	14.26	4.58	4.62	4.64	4.66
	7.0	15.85	15.63	15.31	15.19	4.51	4.48	4.57	4.59
	11.1	16.50	16.26	16.15	16.06	4.27	4.30	4.31	4.33
	13.9	17.11	16.87	16.76	16.61	4.11	4.12	4.13	4.14
	16.7	17.71	17.45	17.34	17.19	3.95	3.96	3.97	3.97
	18.0	17.98	17.74	17.60	17.48	3.87	3.88	3.88	3.89
1750	-15.0	11.18	11.05	11.00	10.95	4.76	4.92	4.87	4.90
	-10.0	11.93	11.80	11.75	11.69	5.08	5.25	5.19	5.23
	-7.0	12.50	12.36	12.30	12.25	5.40	5.58	5.52	5.55
	-5.6	12.81	12.67	12.61	12.55	5.29	5.36	5.40	5.44
	-2.8	13.10	12.96	12.87	12.81	5.10	5.17	5.20	5.24
	0.0	13.25	13.08	12.99	12.93	4.91	4.97	5.00	5.03
	2.8	13.86	13.68	13.60	13.51	4.77	4.82	4.85	4.87
	5.6	14.96	14.76	14.67	14.58	4.63	4.67	4.69	4.71
	7.0	16.16	15.95	15.63	15.51	4.56	4.53	4.62	4.64
	11.1	16.84	16.61	16.50	16.38	4.32	4.35	4.36	4.37
	13.9	17.45	17.22	17.08	16.96	4.15	4.17	4.18	4.19
	16.7	18.06	17.80	17.69	17.54	4.00	4.01	4.02	4.02
	18.0	18.35	18.09	17.98	17.83	3.92	3.93	3.93	3.94
1900	-15.0	11.30	11.17	11.12	11.04	4.81	4.97	4.91	4.94
	-10.0	12.06	11.93	11.87	11.79	5.13	5.30	5.24	5.27
	-7.0	12.64	12.50	12.44	12.35	5.45	5.63	5.56	5.60
	-5.6	12.96	12.81	12.76	12.67	5.34	5.42	5.46	5.49
	-2.8	13.25	13.10	13.02	12.96	5.15	5.22	5.26	5.29
	0.0	13.39	13.22	13.13	13.05	4.96	5.02	5.05	5.08
	2.8	14.03	13.83	13.74	13.66	4.82	4.87	4.90	4.93
	5.6	15.13	14.93	14.82	14.73	4.68	4.72	4.74	4.77
	7.0	16.34	16.12	15.77	15.68	4.61	4.58	4.67	4.69
	11.1	17.02	16.79	16.67	16.55	4.37	4.40	4.41	4.42
	13.9	17.63	17.40	17.28	17.16	4.20	4.22	4.23	4.24
	16.7	18.26	18.00	17.89	17.74	4.04	4.06	4.06	4.07
	18.0	18.55	18.29	18.15	18.03	3.96	3.97	3.98	3.98

Note: The table shows the case where the operation frequency of a compressor is fixed.

55k									[SI_Unit]
INDOOR AIRFLOW (CMH)	HEATING PERFORMANCE AT INDOOR DRY BULB TEMPERATURE								
	OUTDOOR DB(°C)	TC:TOTAL CAPACITY IN KILOWATTS (KW)				PI:TOTAL POWER IN KILOWATTS (KW)			
		Indoor Conditions (DB °C)				Indoor Conditions (DB °C)			
		16.0	20.0	22.0	24.0	16.0	20.0	22.0	24.0
1650	-15.0	11.84	11.69	11.64	11.56	4.99	5.15	5.14	5.19
	-10.0	12.64	12.48	12.43	12.35	5.33	5.49	5.48	5.54
	-7.0	13.24	13.07	13.02	12.93	5.66	5.84	5.83	5.89
	-5.6	13.68	13.51	13.45	13.36	5.59	5.71	5.77	5.83
	-2.8	14.09	13.94	13.86	13.77	5.50	5.62	5.67	5.73
	0.0	14.35	14.17	14.09	13.97	5.41	5.52	5.58	5.63
	2.8	15.13	14.93	14.84	14.73	5.37	5.48	5.54	5.59
	5.6	16.44	16.23	16.12	16.00	5.34	5.44	5.49	5.55
	7.0	17.87	17.65	17.24	17.13	5.33	5.43	5.49	5.54
	11.1	18.72	18.49	18.35	18.23	5.23	5.33	5.38	5.43
	13.9	19.51	19.25	19.10	18.98	5.17	5.27	5.31	5.36
	16.7	20.29	20.00	19.85	19.71	5.11	5.20	5.25	5.29
	18.0	20.67	20.38	20.23	20.09	5.08	5.17	5.21	5.26
1850	-15.0	12.04	11.92	11.84	11.77	5.04	5.20	5.19	5.25
	-10.0	12.86	12.73	12.65	12.56	5.37	5.55	5.54	5.60
	-7.0	13.47	13.33	13.25	13.16	5.71	5.89	5.89	5.95
	-5.6	13.94	13.80	13.71	13.62	5.65	5.77	5.83	5.89
	-2.8	14.38	14.20	14.12	14.03	5.56	5.67	5.73	5.79
	0.0	14.64	14.44	14.35	14.26	5.47	5.58	5.63	5.69
	2.8	15.42	15.22	15.13	15.02	5.43	5.54	5.59	5.65
	5.6	16.75	16.55	16.44	16.32	5.39	5.50	5.55	5.61
	7.0	18.22	18.00	17.56	17.45	5.39	5.49	5.55	5.60
	11.1	19.10	18.84	18.72	18.58	5.29	5.39	5.44	5.50
	13.9	19.88	19.62	19.48	19.36	5.23	5.33	5.38	5.43
	16.7	20.70	20.41	20.26	20.12	5.17	5.26	5.31	5.36
	18.0	21.07	20.78	20.64	20.46	5.13	5.23	5.28	5.32
2000	-15.0	12.17	12.05	11.97	11.90	5.09	5.26	5.25	5.31
	-10.0	13.00	12.87	12.79	12.71	5.43	5.61	5.60	5.66
	-7.0	13.62	13.48	13.39	13.31	5.77	5.96	5.95	6.02
	-5.6	14.09	13.94	13.86	13.77	5.71	5.83	5.89	5.95
	-2.8	14.52	14.35	14.26	14.17	5.62	5.73	5.79	5.85
	0.0	14.78	14.61	14.49	14.41	5.53	5.64	5.70	5.75
	2.8	15.60	15.36	15.28	15.16	5.49	5.60	5.66	5.71
	5.6	16.93	16.70	16.58	16.49	5.45	5.56	5.61	5.67
	7.0	18.42	18.17	17.74	17.62	5.45	5.55	5.61	5.66
	11.1	19.27	19.01	18.90	18.75	5.35	5.45	5.50	5.56
	13.9	20.09	19.80	19.68	19.54	5.29	5.39	5.44	5.48
	16.7	20.87	20.58	20.44	20.29	5.22	5.32	5.37	5.41
	18.0	21.28	20.96	20.81	20.67	5.19	5.29	5.33	5.38

Note: The table shows the case where the operation frequency of a compressor is fixed.

7. Noise Criterion Curves

7.1 Indoor Unit

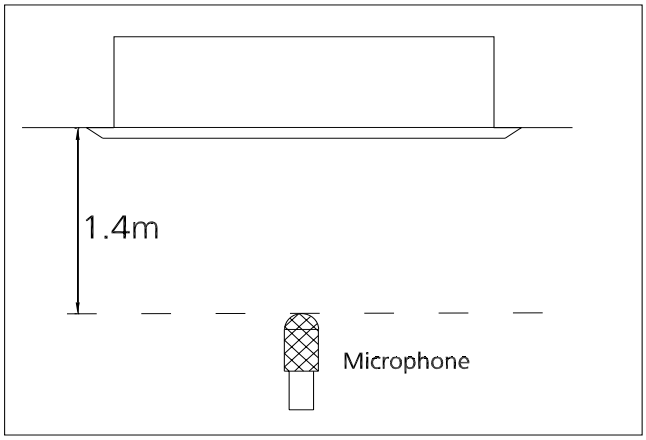

Notes:

-Sound measured at 1.4m away from the noisiest location of the unit.

-Data is valid at free field condition

-Data is valid at nominal operation condition

-Reference acoustic pressure OdB = 20μPa

-Sound level will vary depending on a range of factors such as the construction -(acoustic absorption coefficient) of particular room in which the equipment is installed.

-The operating conditions are assumed to be standard.

24k

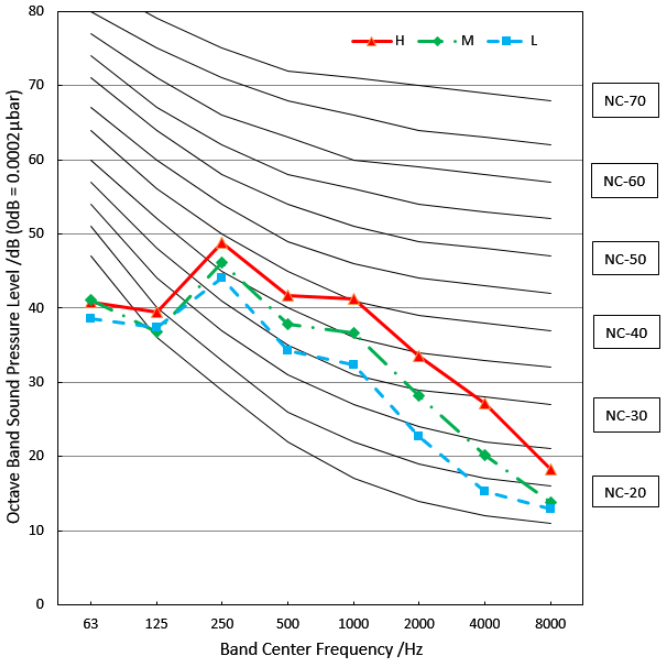

30k

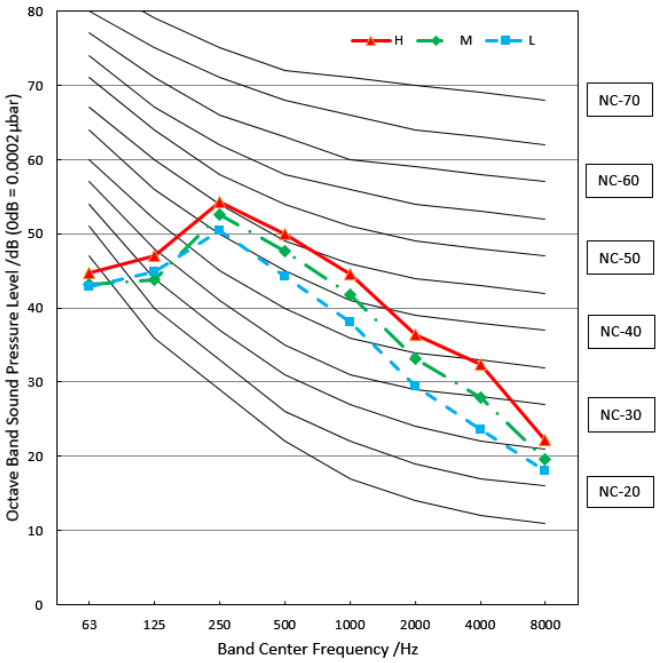

36k

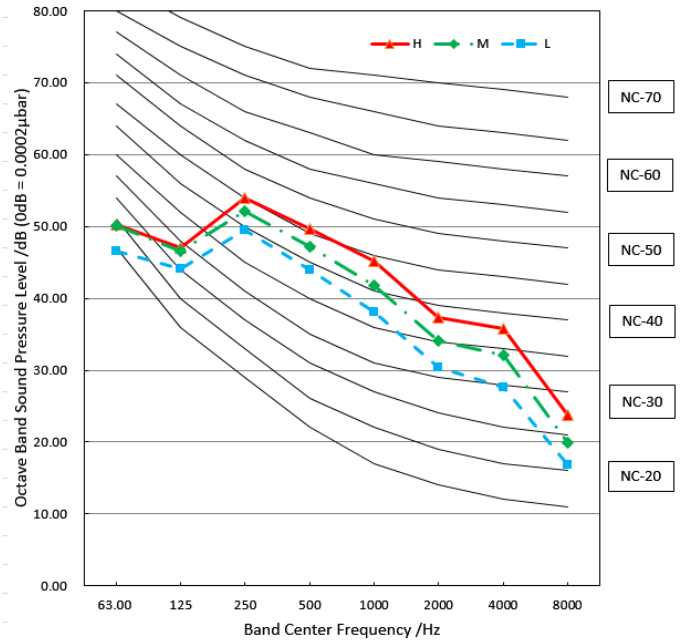

42k

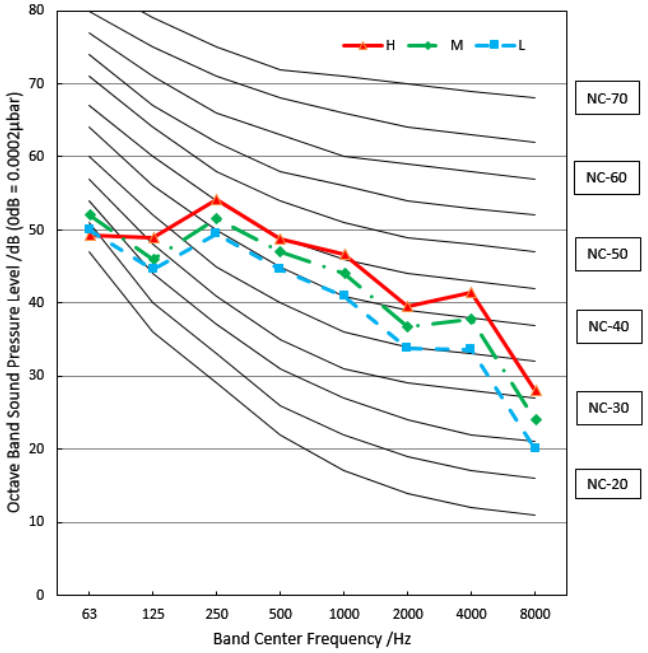

48k

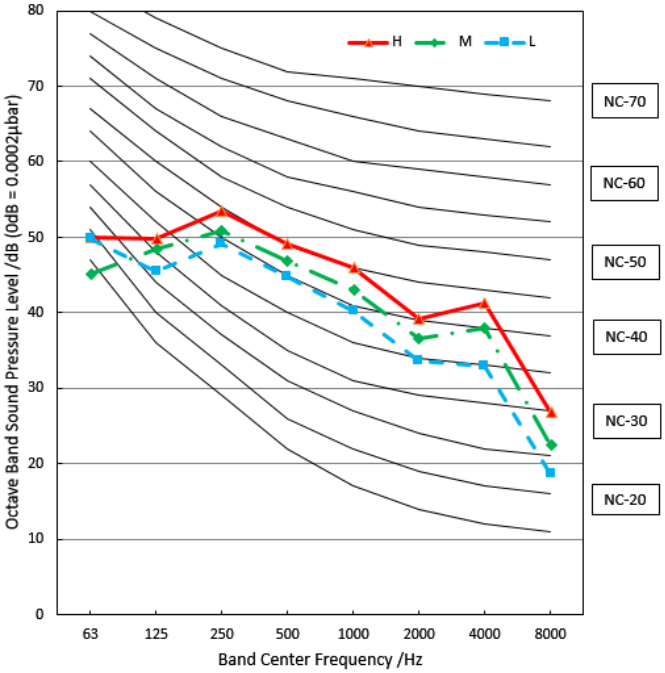

55k

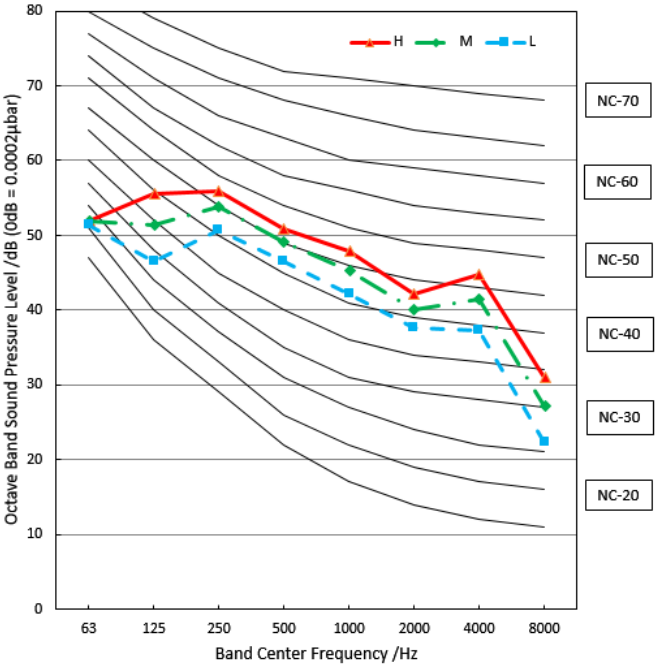

7. Electrical Characteristics

Capacity (Btu/h)		24k	30k	36k
OUDOOR UNIT POWER	Phase	1-phase	1-phase	1-phase
	Frequency and Voltage	220-240V, 50Hz	220-240V, 50Hz	220-240V, 50Hz
	Power Wiring (mm^2)	3×2.5	3×2.5	3×4.0
	Circuit Breaker/ Fuse (A)	25/20	50/40	50/40
Indoor/Outdoor Connecting Wiring	Weak Electric Signal) (mm^2)			
	Strong Electric Signal(mm^2)	4×1.0	4×1.0	4×1.0

Capacity (Btu/h)		36k	42k	48~55k
OUDOOR UNIT POWER	Phase	3-phase	1-phase	3-phase
	Frequency and Voltage	380-415V, 50Hz	220-240V, 50Hz	380-415V, 50Hz
	Power Wiring (mm^2)	5×2.5	3×4.0	5×2.5
	Circuit Breaker/ Fuse (A)	25/20	50/40	32/25
Indoor/Outdoor Connecting Wiring	Weak Electric Signal) (mm^2)			
	Strong Electric Signal(mm^2)	4×1.0	4×1.0	4×1.0

7. Electrical Wiring Diagrams

IDU Capacity (Btu/h)	IDU Wiring Diagram
24k~55k	16022500004263

Abbreviation	Paraphrase
Y/G	Yellow-Green Conductor
CAP1	Indoor Fan Capacitor
FAN1	Indoor Fan
PUMP	PUMP
L	LIVE
N	NEUTRAL
TO CCM Comm.Bus	Central Controller
T1	Indoor Room Temperature
T2	Coil Temperature of Indoor Heat Exchanger
P3	Super High Speed
P2	High Speed

Indoor unit wiring diagram: 16022500004263

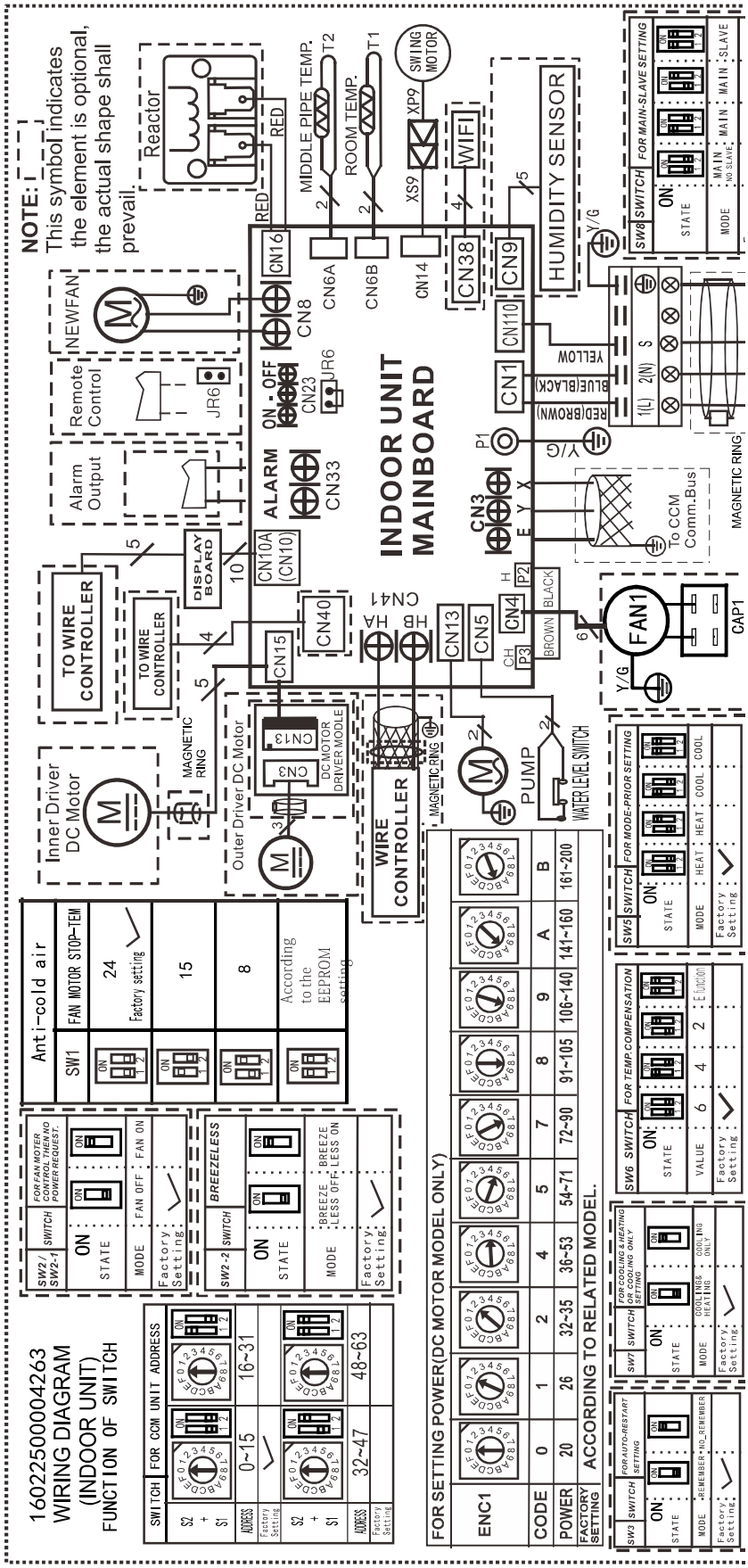

10.1 Some connectors introduce:

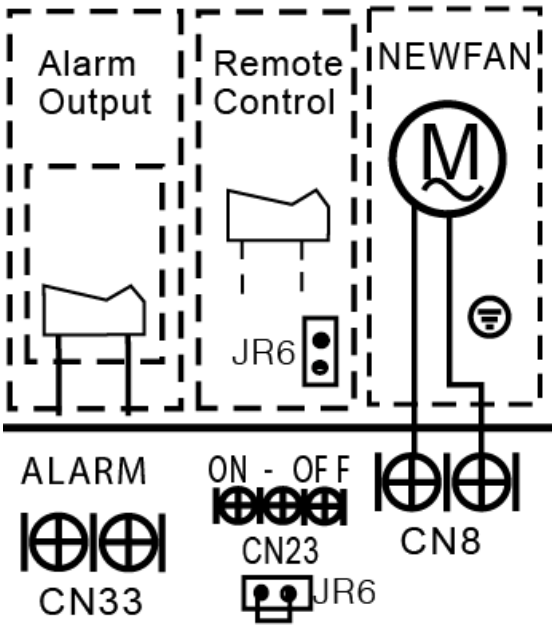

A For remote control (ON-OFF) terminal port CN23 and short connector of JR6
1. Remove the short connector of JR6 when you use ON-OFF function;
2. When remote switch off (OPEN) ;the unit would be off;
3. When remote switch on (CLOSE) ;the unit would be on;
4. When close/open the remote switch, the unit would be responded the demand within 2 seconds;
5. When the remote switch on. you can use remote controller/ wire controller to select the mode what you want ;when the remote switch off , the unit would not respond the demand from remote controller/wire controller.
when the remote switch off , but the remote controller / wire controller are on, CP code would be shown on the display board.
6.The voltage of the port is 12V DC , design Max.current is 5mA.

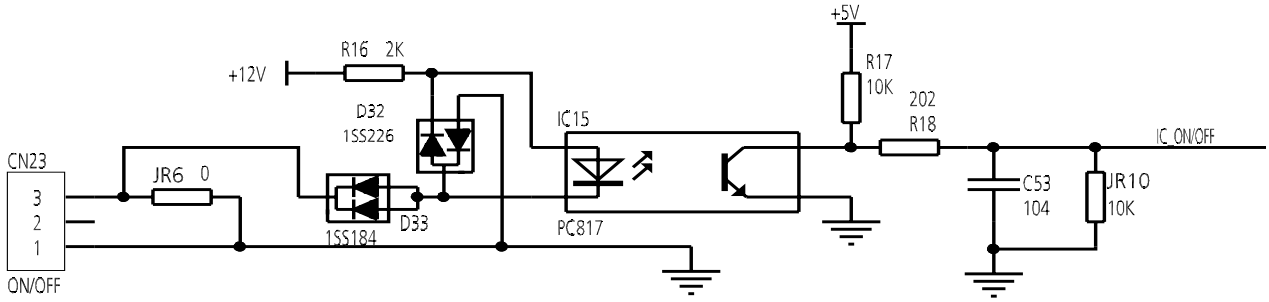

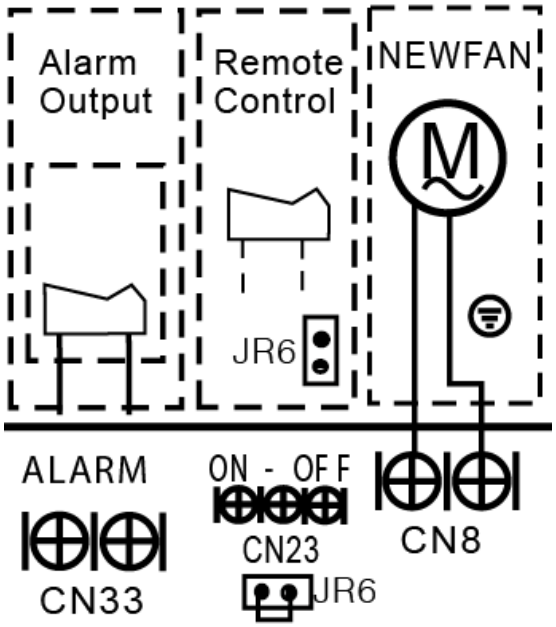

B For ALARM terminal port CN33

1. Provide the terminal port to connect ALARM ,but no voltage of the terminal port , the power from the ALARM system (not from the unit)
2. Although design voltage can support higher voltage ,but we strongly ask you connect the power less than 24V, current less than 0.5A
3. When the unit occurs the problem , the relay would be closed , then ALARM works

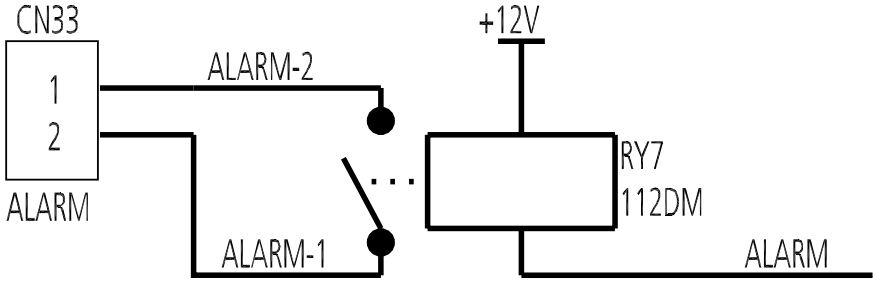

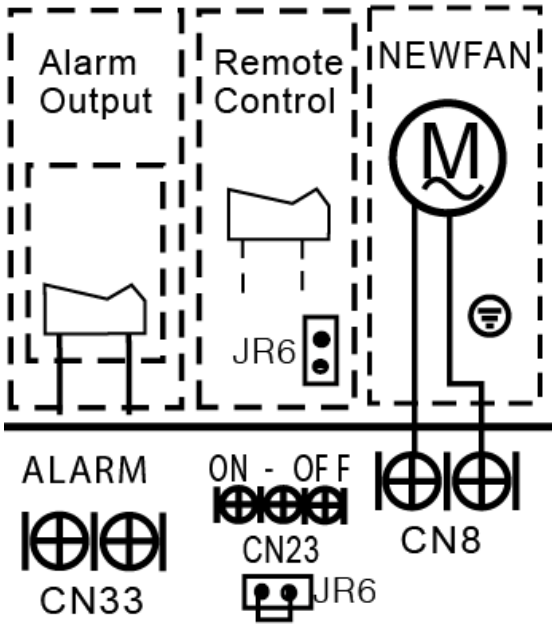

C. For new fresh motor terminal port CN8

1. Connect the fan motor to the port , no need care L/N of the motor ;
2. The output voltage is the power supply;
3. The fresh motor can not excess 200W or 1A , follow the smaller one ;
4. The new fresh motor will be worked when the indoor fan motor work ;when the indoor fan mo tor stops , the new fresh motor would be stopped ;
5. When the unit enter force cooling mode or capacity testing mode , the fresh motor isn't work .

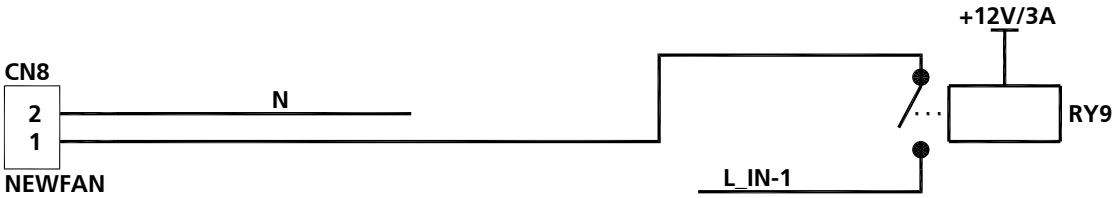

10.2 **Micro-Switch Introduce:**

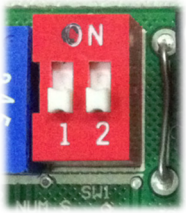

Anti-cold air	
SW1	FAN MOTOR STOP-TEM
ON 1 2	24 Factory setting
ON 1 2	15
ON 1 2	8
ON 1 2	According to the EEPROM setting

A. Micro-switch SW1 is for selection of indoor fan stop temperature (TEL0) when it is in anti-cold wind action in heating mode.

Range: 24°C, 15°C, 8°C, According to EEROM setting (reserved for special customizing).

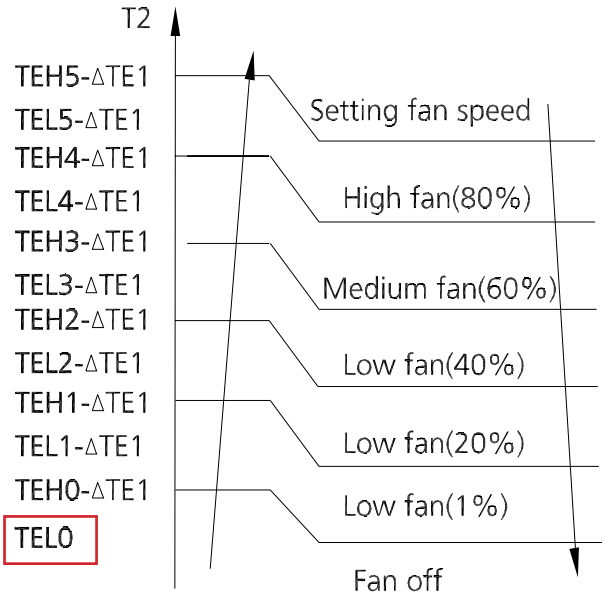

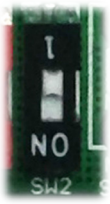

SW2 / SW2-1	SWITCH	FOR FAN MOTER CONTROL THEN NO POWER REQUEST.
ON STATE	ON	ON
MODE	FAN OFF	FAN ON
Factory Setting	✓	

B.Micro-switch SW2/SW2-1 is for selection of indoor FAN ACTION if room temperature reaches the setponit and the compressor stops.

Range: OFF (anti-cold wind is available in heating mode), Keep running (No anti-cold wind function).

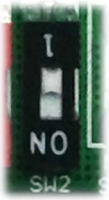

SW2-2	SWITCH	BREEZELESS
STATE	ON	ON
MODE	BREEZE LESS OFF	BREEZE LESS ON
Factory Setting	✓	

C.Micro-switch SW2-2 is for selection of Breezeless function.
Range: OFF, ON.



SW3	SWITCH	FOR AUTO-RESTART SETTING
STATE	ON	ON
MODE	REMEMBER	NO_REMEMBER
Factory Setting	✓	

D.Micro-switch SW3 is for selection of auto-restart function.
Range: Active, inactive



SW5	SWITCH	FOR MODE-PRIOR SETTING			
STATE	ON	ON	ON	ON	ON
MODE	HEAT	HEAT	COOL	COOL	
Factory Setting	✓				

E. Micro-switch SW5 is for setting mode priority of multi connection.
Range: Heat, cool.

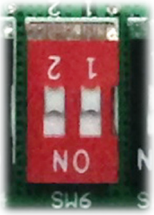

SW6	SWITCH	FOR TEMP.COMPENSATION			
STATE	ON	ON	ON	ON	ON
VALUE	6	4	2	E function	
Factory Setting	✓				

F.Micro-switch SW6 is for selection of temperature compensation in heating mode. This helps to reduce the real temperature difference between ceiling and floor so that the unit could run properly.

If the height of installation is lower, smaller value could be chosen.

Range: 6°C, 4°C, 2°C, E function (reserved for special customizing)

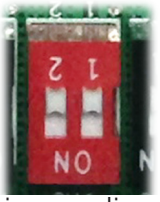

SW7	SWITCH	FOR COOLING & HEATING OR COOLING ONLY SETTING
STATE	ON	ON / ON
MODE		COOLING& HEATING / COOLING ONLY
Factory Setting		✓

G.Micro-switch SW7 is for setting cooling &heating or cooling only.

Range: cooling &heating, cooling.

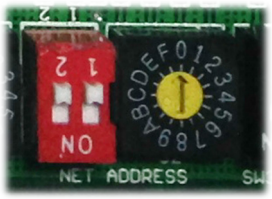

SWITCH	FOR CCM UNIT ADDRESS	
S2 + S1		
ADDRESS	0~15	16~31
Factory Setting	✓	
S2 + S1		
ADDRESS	32~47	48~63
Factory Setting		

H.Micro-switch S1 and dial-switch S2 are for address setting when you want to control this unit by a central controller.

Range: 00-63



FOR SETTING POWER(DC MOTOR MODEL ONLY)										
ENC1										
CODE	0	1	2	4	5	7	8	9	A	B
POWER	20	26	32~35	36~53	54~71	72~90	91~105	106~140	141~160	161~200
FACTORY SETTING	ACCORDING TO RELATED MODEL.									

I. Dial-switch ENC1: The indoor PCB is universal designed for whole series units from 7K to 68K. This ENC1 setting will tell the main program what size the unit is.

NOTE: Usually there is glue on it because the switch position cannot be changed at random unless you want to use this PCB as a spare part to use in another unit. Then you have to select the right position to match the size of the unit.

“20” means 2kW (7K),“105” means 10.5kW(36K), and so on.

Indoor Unit-A6 Duct

Contents

1. Feature....2
2. Dimensional Drawings....4
3. Part names....5
4. Service Place....5
5. Accessories....6
6. Fan Performance....7
7. Capacity Tables....13
8. Noise Criterion Curves....40
9. Electrical Characteristics....43
10. Electrical Wiring Diagrams....44

1. Feature

1.1 Eccentric Fan Design

New eccentric fan design improves the airflow at the air outlet, resulting better performance.

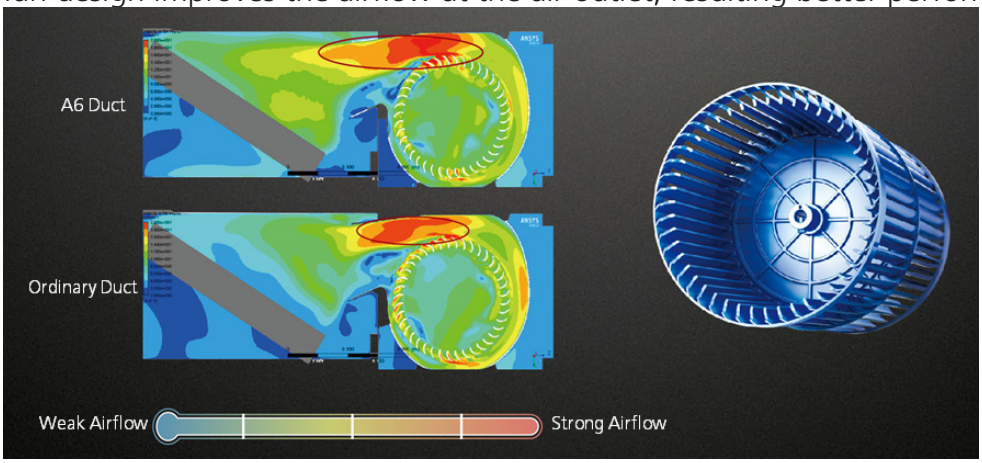

1.2 Slim Design

The industry lowest height is designed to be fitted into tight roof space.

1.3 Flexible Air Intake

The frame size of air inlet in rear and bottom is the same. It's very easy to switch to match different applications.

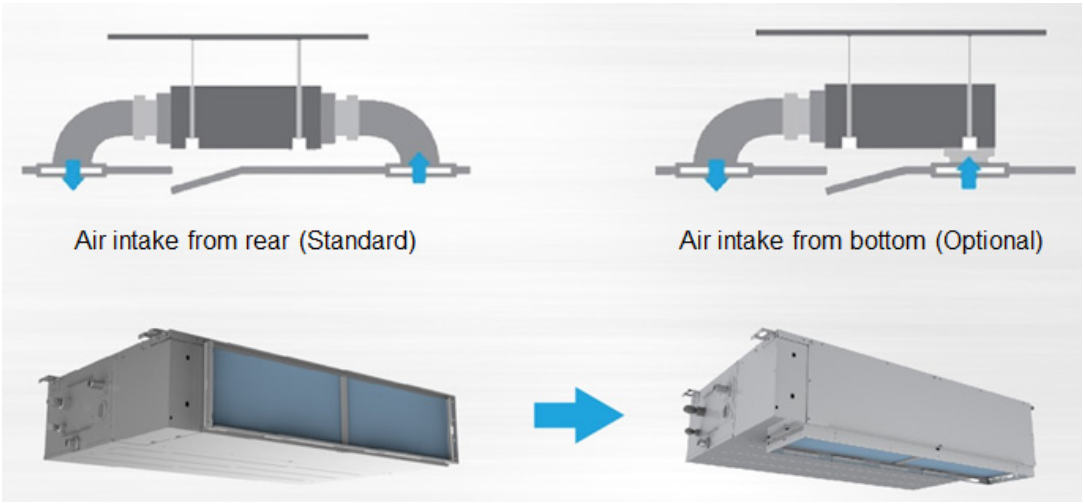

1.4 Built-in Drain Pump

The built-in drain pump can lift condensing water up to 750mm.

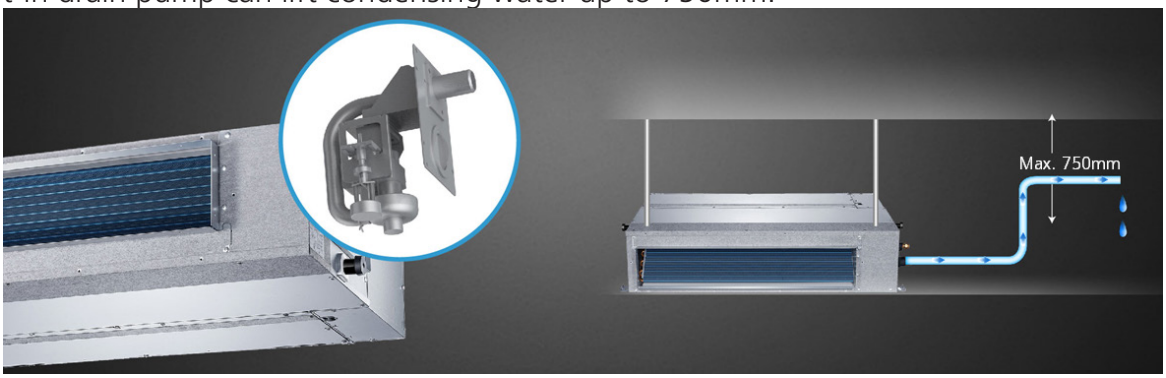

1.5 Easy Clean

You can pull out the filter from left, right, or from the bottom for easy cleaning.

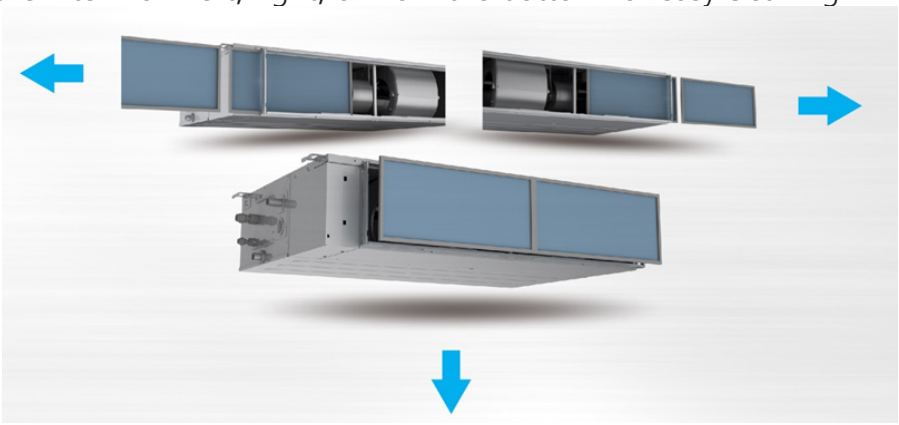

2. Dimensional Drawings

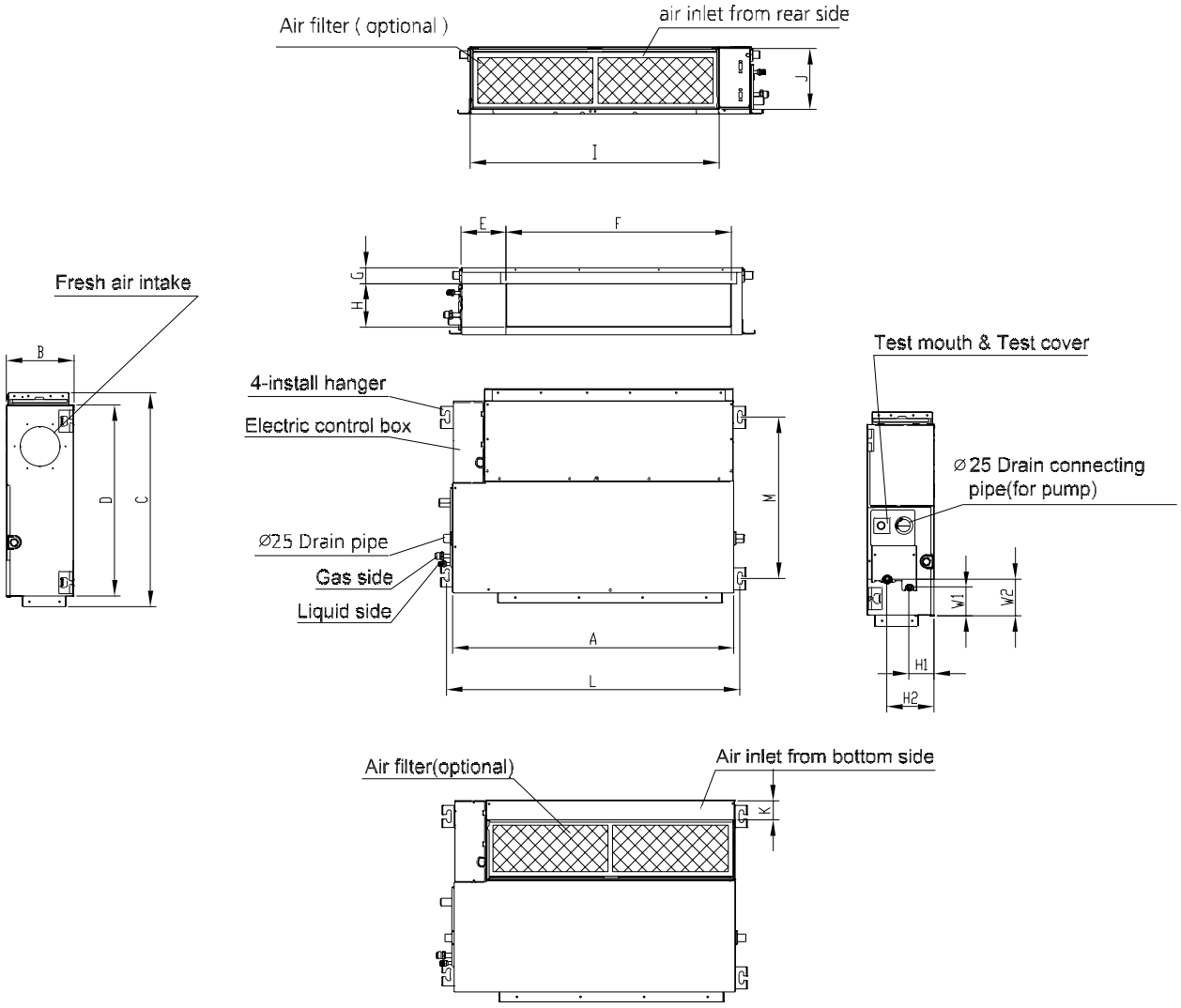

Model (KBtu/h)	unit	A	B	C	D	E	F	G	H	I	J	K	L	M	H1	H2	W1	W2
12	mm	700	200	506	450	137	537	30	152	599	186	50	741	360	84	140	84	84
	inch	27.56	7.87	19.92	17.72	5.39	21.14	1.18	5.98	23.58	7.32	1.97	29.17	14.17	3.31	5.51	3.31	3.31
18	mm	880	210	674	600	140	706	50	136	782	190	40	920	508	78	148	88	112
	inch	34.65	8.27	26.54	23.62	5.51	27.8	1.97	5.35	30.79	7.48	1.57	36.22	20	3.07	5.83	3.46	4.41
24	mm	1100	249	774	700	140	926	50	175	1001	228	5	1140	598	80	150	130	155
	inch	43.31	9.80	30.47	27.56	5.51	36.46	1.97	6.89	39.41	8.98	0.2	44.88	23.54	3.15	5.91	5.12	6.10
30~36	mm	1360	249	774	700	140	1186	50	175	1261	228	5	1400	598	80	150	130	155
	inch	53.54	9.80	30.47	27.56	5.51	46.69	1.97	6.89	49.65	8.98	0.2	55.12	23.54	3.15	5.91	5.12	6.10
42~55	mm	1200	300	874	800	123	1044	50	227	1101	280	5	1240	697	80	150	185	210
	inch	47.24	11.81	34.41	31.5	4.84	41.1	1.97	8.94	43.35	11.02	0.2	48.82	27.44	3.15	5.91	7.28	8.27

3. Part names

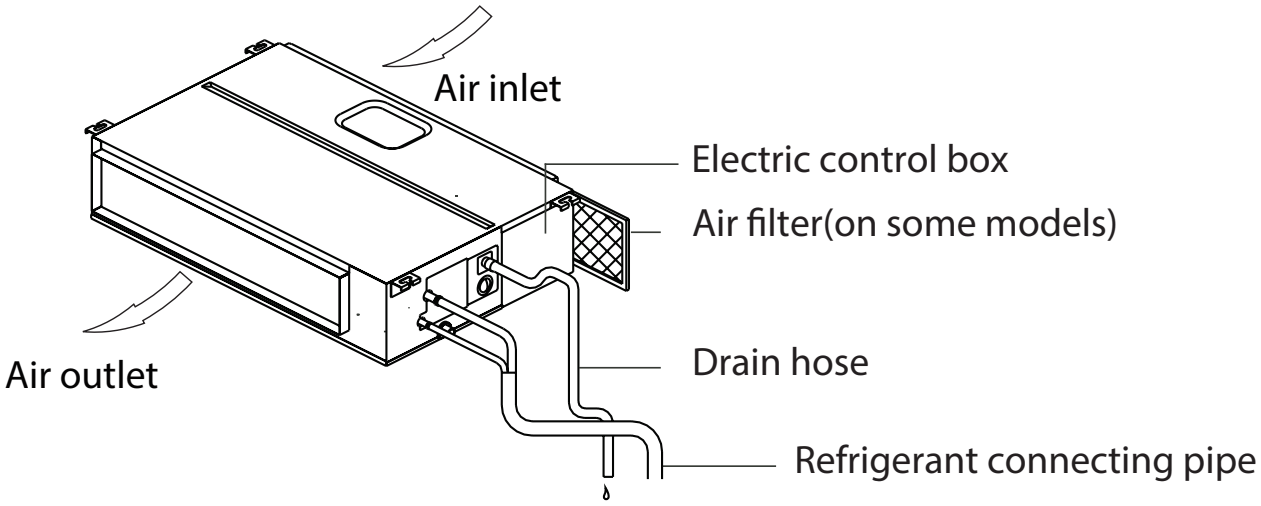

4. Service Place

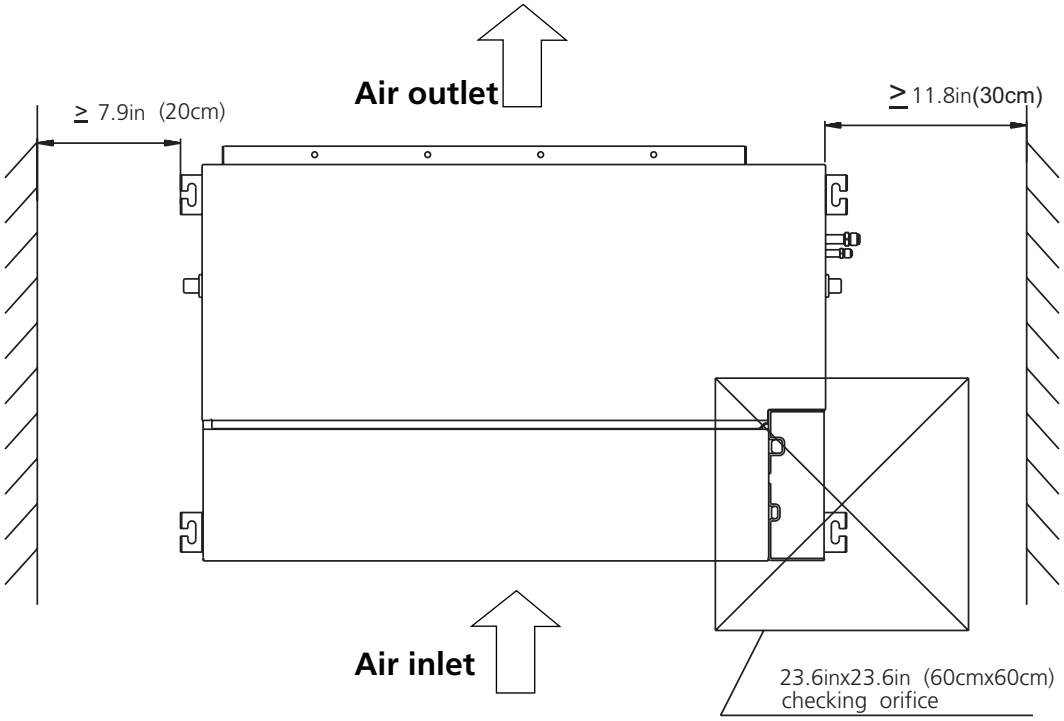

5. Accessories

The air conditioning system comes with the following accessories. Use all of the installation parts and accessories to install the air conditioner. Improper installation may result in water leakage, electrical shock and fire, or equipment failure.

	Name	Shape	Quantity
Tubing & Fittings	Soundproof / insulation sheath	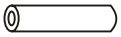	2
	Seal sponge (some models)		1
	Orifice (some models)	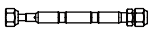	1
Drainpipe Fittings (for cooling & heating)	Drain joint (some models)		1
	Seal ring (some models)		1
EMC Magnetic Ring (some models)	Magnetic ring(Wrap the electric wires S1 & S2 (P & Q & E) around the magnetic ring twice)	 S1&S2(P&Q&E)	1
	Magnetic ring(Hitch on the connective cable between the indoor unit and outdoor unit after installation.)		1
Others	Owner's manual&Installation manual	-	1
	Transfer connector(Φ12.7-Φ15.9)/(Φ0.5in-Φ0.63in)(Packed with the indoor unit) NOTE: Pipe size may differ from appliance to appliance. To meet different pipe size requirements, sometimes the pipe connections need a transfer connector installed on the outdoor unit.	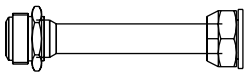	1 (on some models)
	Transfer connector(Φ6.35-Φ9.52)/(Φ0.25in-Φ0.375in)(Packed with the indoor unit) NOTE: Pipe size may differ from appliance to appliance. To meet different pipe size requirements, sometimes the pipe connections need a transfer connector installed on the outdoor unit.	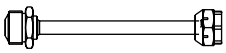	1 (on some models)
	Transfer connector(Φ9.52-Φ12.7)/(Φ0.375in-Φ0.5in)(Packed with the indoor unit) NOTE: Pipe size may differ from appliance to appliance. To meet different pipe size requirements, sometimes the pipe connections need a transfer connector installed on the outdoor unit.	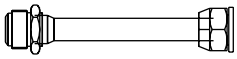	1 (on some models)
	Connecting wire for display (2m)	-	1(on some models)
	Cord protection rubber ring		1(on some models)
	Display panel *Just for testing purposes only	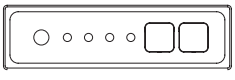	1(on some models-KJR-120G,KJR-120H)

Optional accessories:

- There are two types of remote controls: wired and wireless.
- Select a remote controller based on customer preferences and requirements and install in an appropriate place.
- Refer to catalogues and technical literature for guidance on selecting a suitable remote controller.

6. Fan Performance

12K

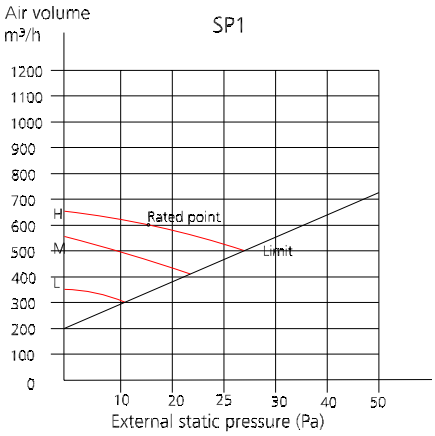

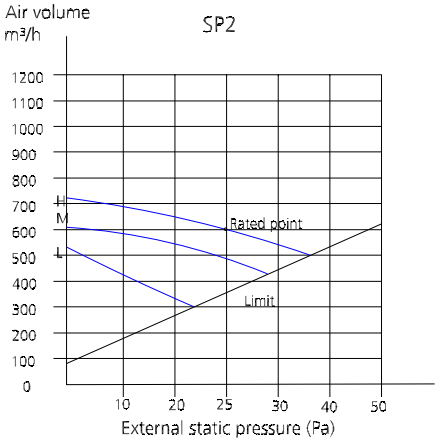

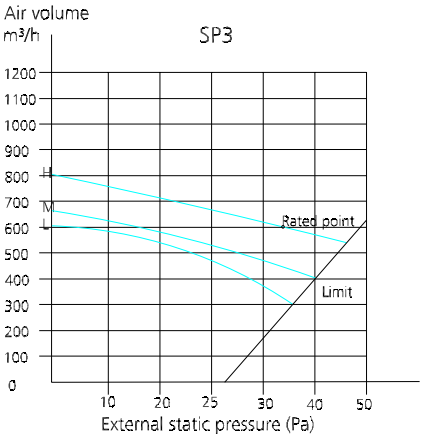

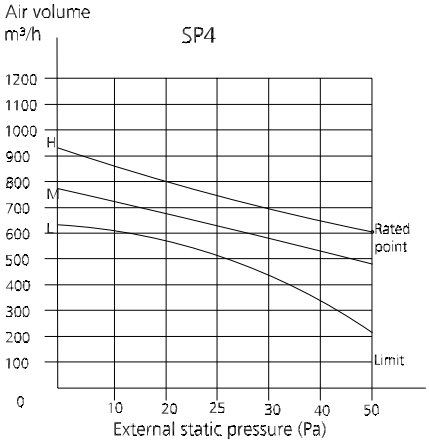

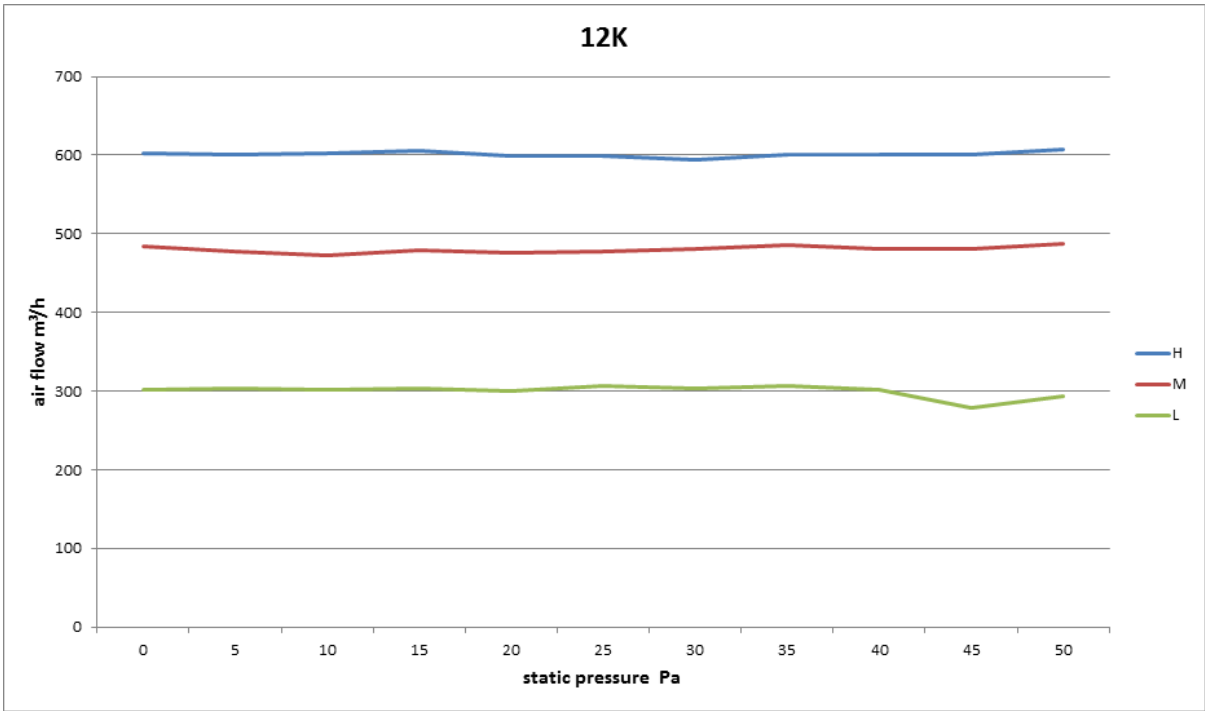

18K

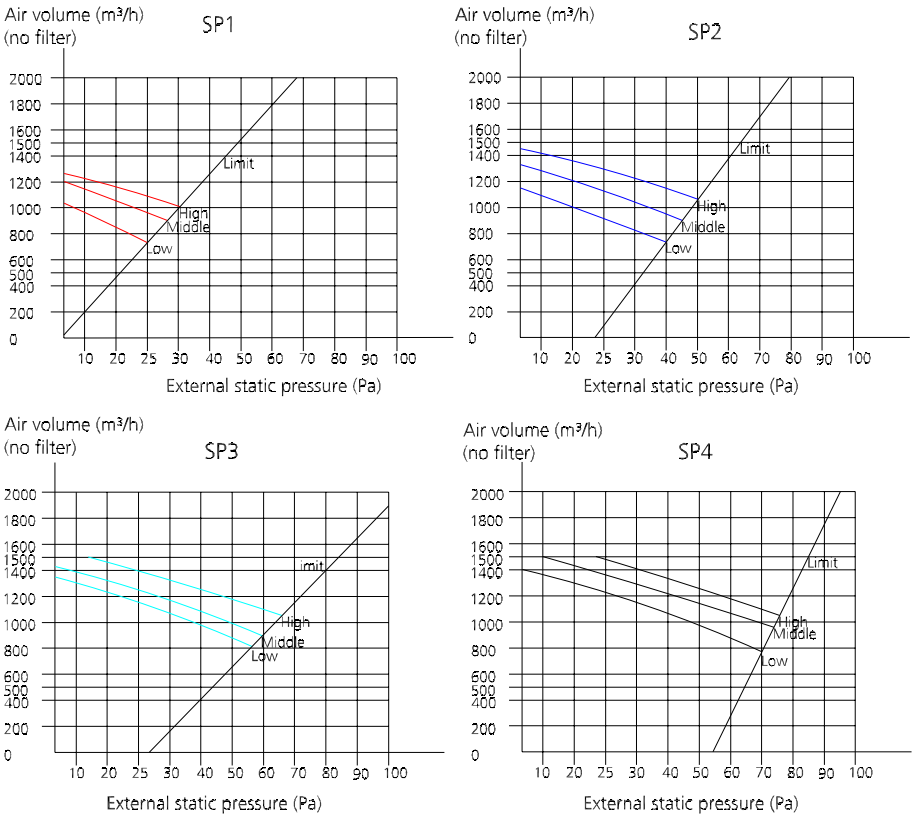
Air volume (m³/h)
(no filter)
SP1
Limit
High
Middle
Low
External static pressure (Pa)
Air volume (m³/h)
(no filter)
SP2
Limit
High
Middle
Low
External static pressure (Pa)
Air volume (m³/h)
(no filter)
SP3
High
Middle
Low
External static pressure (Pa)
Air volume (m³/h)
(no filter)
SP4
Limit
High
Middle
Low
External static pressure (Pa)

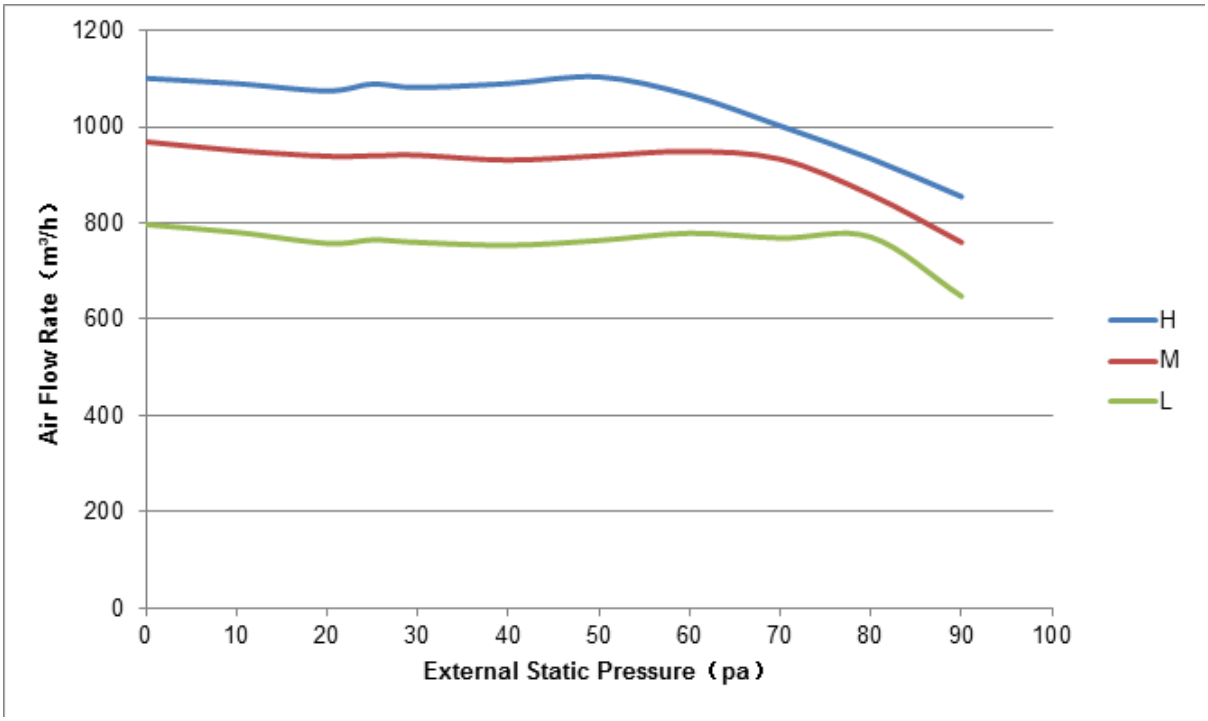
Air Flow Rate（m³/h）
External Static Pressure（pa）
H
M
L

24K

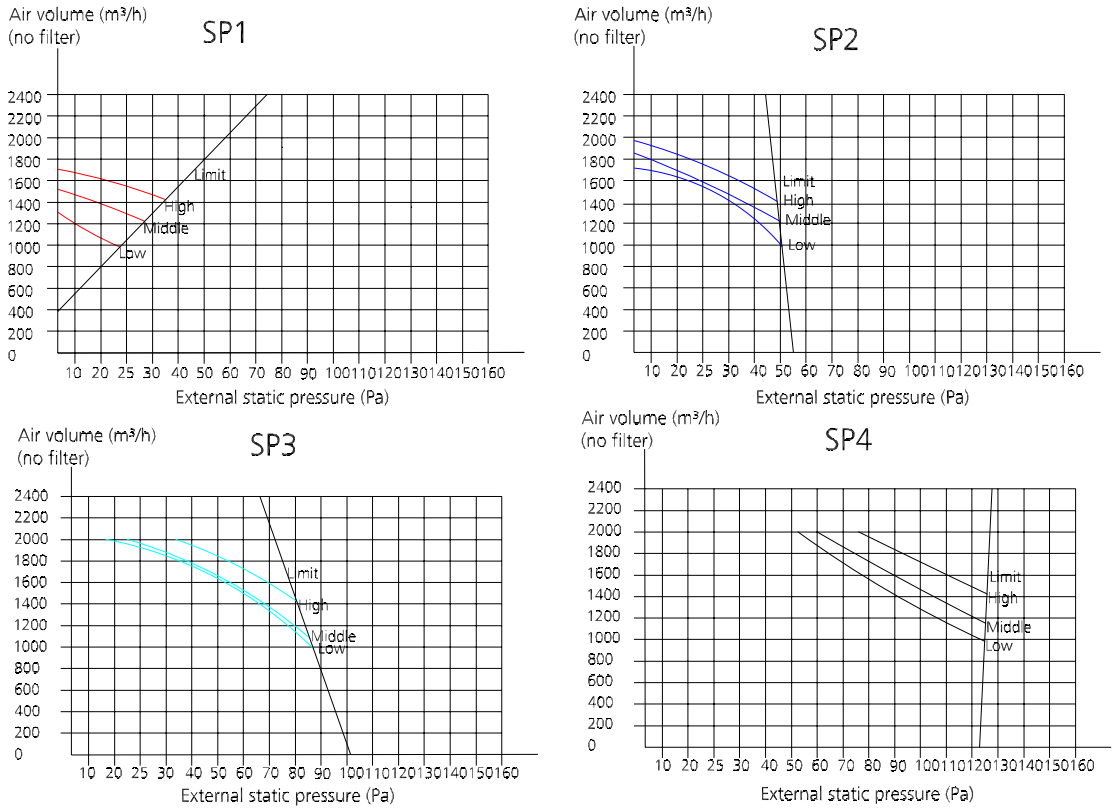
Air volume (m³/h)
(no filter)
SP1
Limit
High
Middle
Low
External static pressure (Pa)
SP2
SP3
SP4

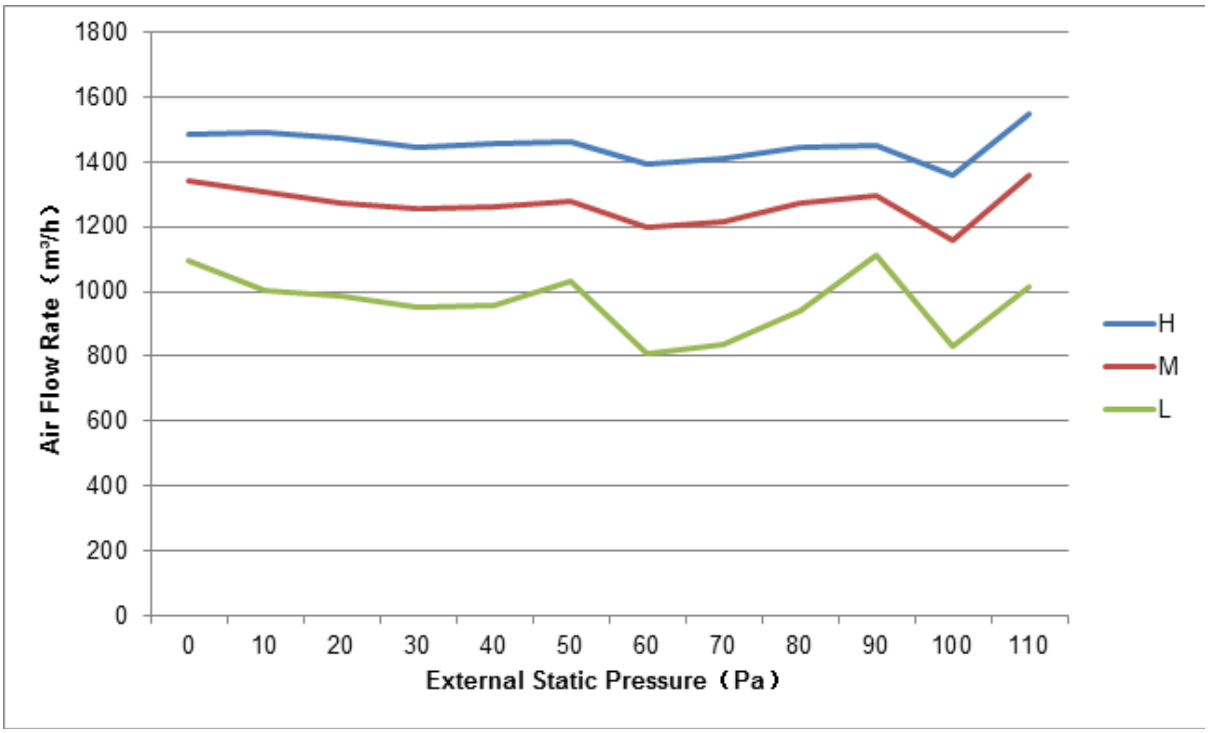
Air Flow Rate（m³/h）
External Static Pressure（Pa）
H
M
L

30K/36K

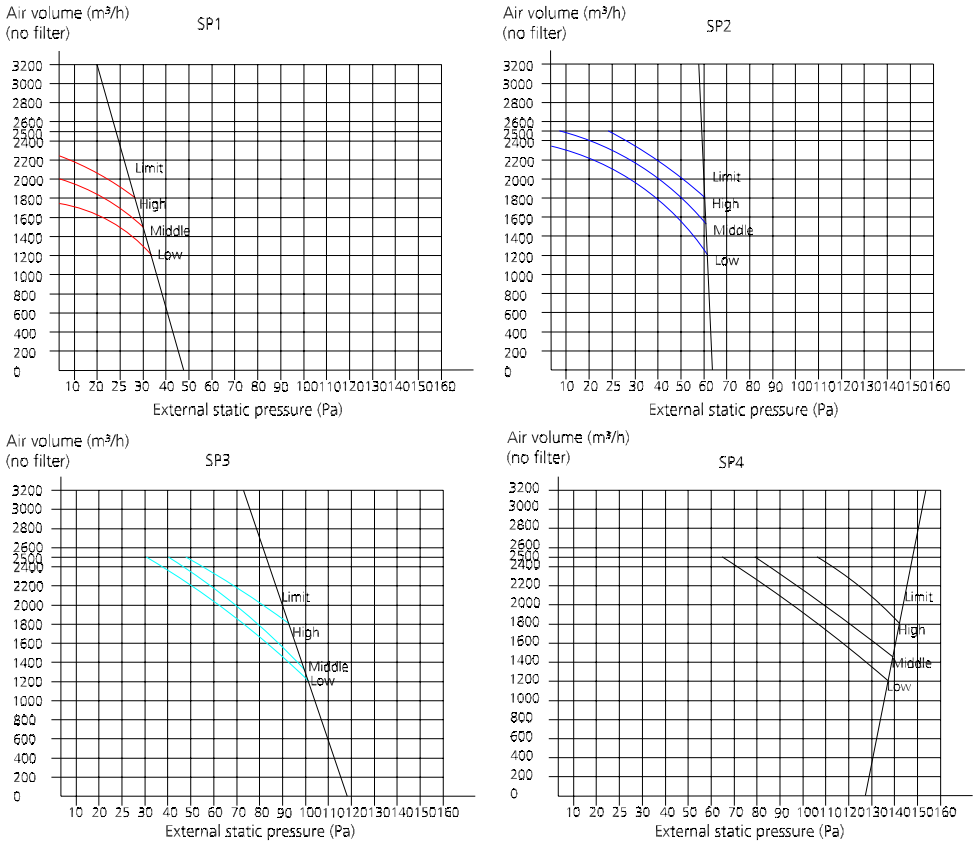
Air volume (m³/h)
(no filter)
SP1
Limit
High
Middle
Low
External static pressure (Pa)
Air volume (m³/h)
(no filter)
SP2
Limit
High
Middle
Low
External static pressure (Pa)
Air volume (m³/h)
(no filter)
SP3
Limit
High
Middle
Low
External static pressure (Pa)
Air volume (m³/h)
(no filter)
SP4
Limit
High
Middle
Low
External static pressure (Pa)

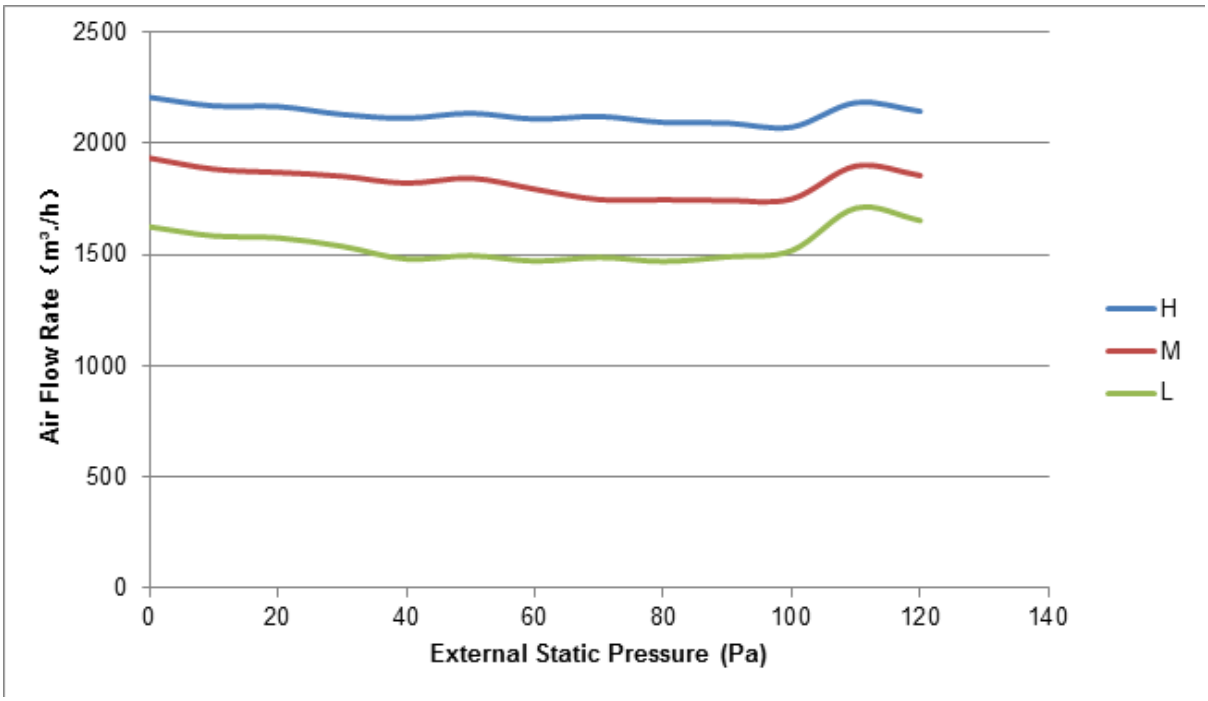
Air Flow Rate (m³/h)
External Static Pressure (Pa)
H
M
L

42K/48K

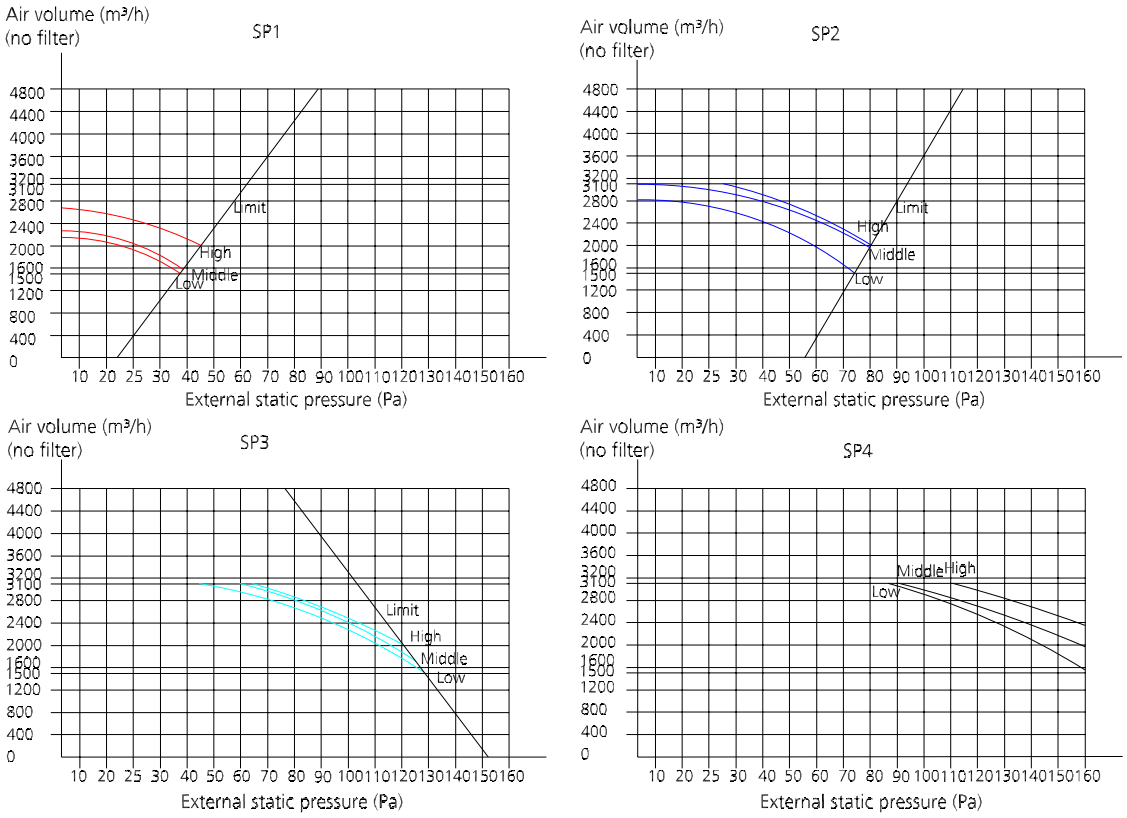
Air volume (m³/h)
(no filter)
SP1
Limit
High
Middle
Low
External static pressure (Pa)
Air volume (m³/h)
(no filter)
SP2
Limit
High
Middle
Low
External static pressure (Pa)
Air volume (m³/h)
(no filter)
SP3
Limit
High
Middle
Low
External static pressure (Pa)
Air volume (m³/h)
(no filter)
SP4
Middle
High
Low
External static pressure (Pa)

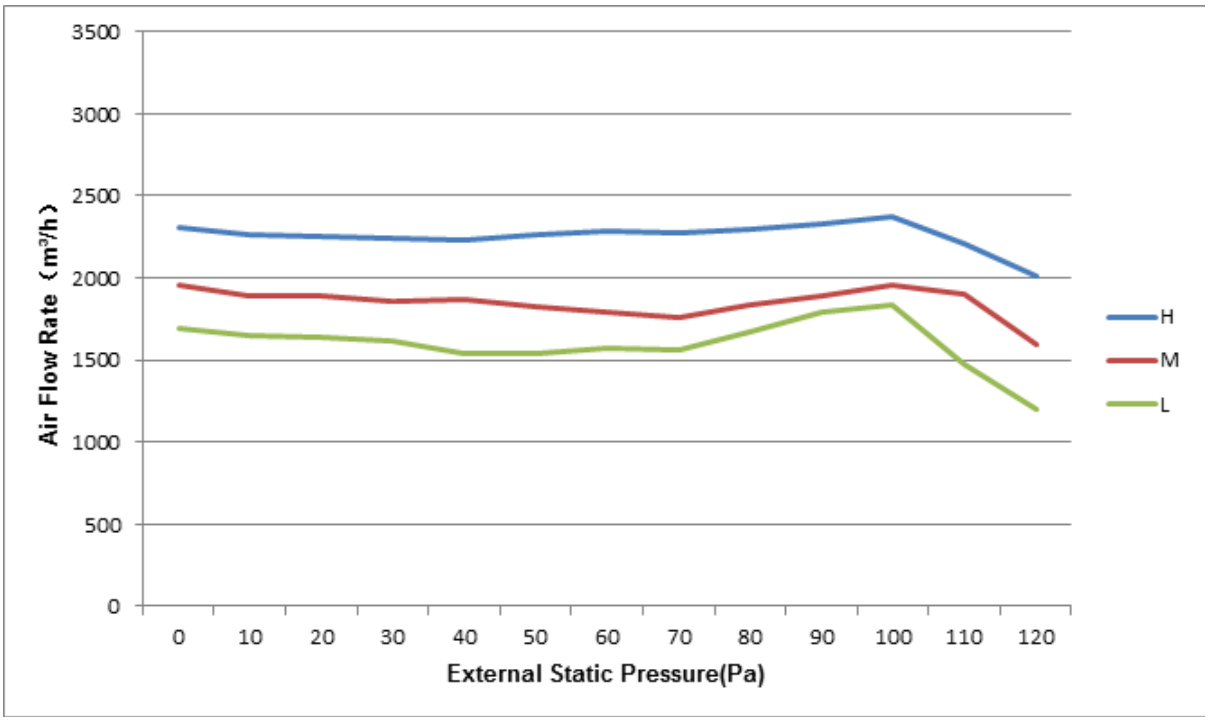
Air Flow Rate (m³/h)
External Static Pressure(Pa)
H
M
L

55K

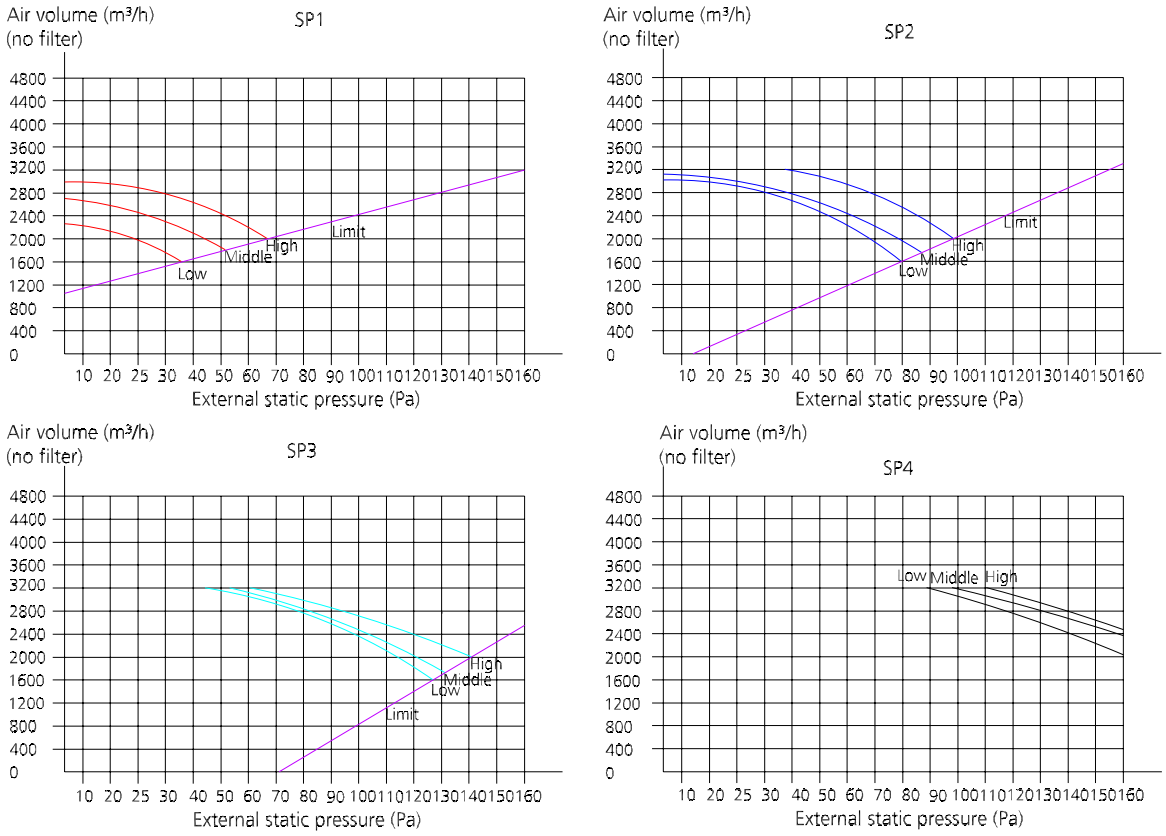
Air volume (m³/h)
(no filter)
SP1
4800
4400
4000
3600
3200
2800
2400
2000
1600
1200
800
400
0
Low
Middle
High
Limit
10 20 25 30 40 50 60 70 80 90 100 110 120 130 140 150 160
External static pressure (Pa)
Air volume (m³/h)
(no filter)
SP2
Low
Middle
High
Limit
External static pressure (Pa)
Air volume (m³/h)
(no filter)
SP3
High
Middle
Low
Limit
External static pressure (Pa)
Air volume (m³/h)
(no filter)
SP4
Low
Middle
High
External static pressure (Pa)

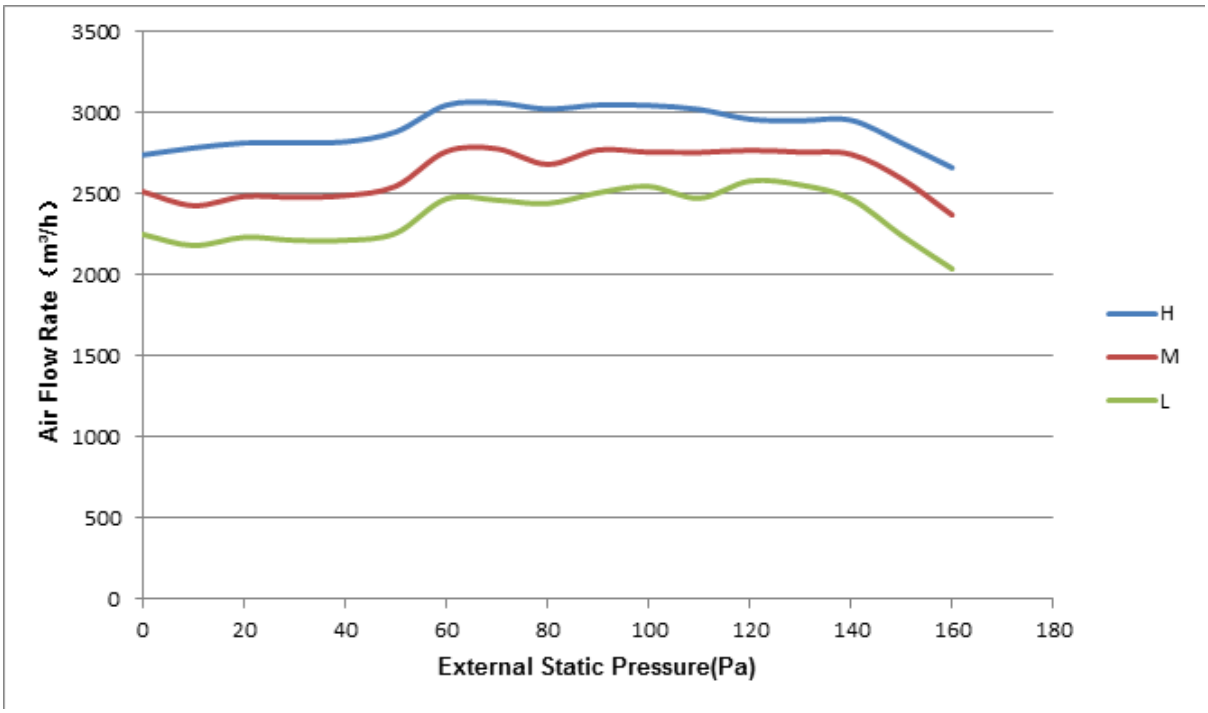
Air Flow Rate（m³/h）
3500
3000
2500
2000
1500
1000
500
0
0 20 40 60 80 100 120 140 160 180
External Static Pressure(Pa)
H
M
L

7. Capacity Tables

7.1 Cooling

12k																		
INDOOR AIRFLOW (CMH)	OUTDOOR DB(℃)	ID WB (℃)	16.0				18.0				19.0				22.0			
		ID DB (℃)	23.0	25.0	27.0	29.0	23.0	25.0	27.0	29.0	23.0	25.0	27.0	29.0	23.0	25.0	27.0	29.0
300	-15	TC	3.71	3.72	3.72	3.72	3.90	3.96	3.96	3.96	4.00	4.00	4.00	4.00	4.25	4.25	4.25	4.25
		S/T	0.65	0.70	0.76	0.81	0.55	0.60	0.66	0.70	0.50	0.55	0.60	0.66	0.39	0.43	0.48	0.53
		PI	0.70	0.70	0.70	0.70	0.69	0.69	0.69	0.69	0.70	0.70	0.70	0.70	0.70	0.70	0.70	0.70
	-10	TC	3.68	3.70	3.70	3.70	3.87	3.93	3.93	3.93	3.98	3.98	3.98	3.98	4.23	4.23	4.23	4.23
		S/T	0.65	0.71	0.77	0.82	0.55	0.61	0.66	0.71	0.50	0.55	0.60	0.66	0.39	0.44	0.49	0.53
		PI	0.70	0.70	0.70	0.70	0.69	0.69	0.69	0.69	0.69	0.69	0.69	0.69	0.70	0.70	0.70	0.70
	-5	TC	3.66	3.67	3.67	3.67	3.86	3.92	3.92	3.92	3.96	3.96	3.96	3.96	4.22	4.22	4.22	4.22
		S/T	0.65	0.71	0.77	0.82	0.56	0.61	0.66	0.71	0.51	0.56	0.60	0.66	0.39	0.44	0.49	0.54
		PI	0.69	0.70	0.70	0.69	0.69	0.69	0.69	0.69	0.69	0.69	0.69	0.69	0.70	0.70	0.70	0.70
	0	TC	3.64	3.66	3.66	3.66	3.85	3.91	3.91	3.91	3.95	3.95	3.95	3.95	4.22	4.22	4.22	4.22
		S/T	0.66	0.72	0.77	0.82	0.56	0.61	0.67	0.72	0.51	0.56	0.61	0.67	0.39	0.44	0.49	0.54
		PI	0.70	0.70	0.70	0.70	0.69	0.69	0.69	0.69	0.70	0.70	0.70	0.70	0.70	0.70	0.70	0.70
	5	TC	3.62	3.64	3.64	3.64	3.83	3.89	3.89	3.89	3.94	3.94	3.94	3.94	4.21	4.21	4.21	4.21
		S/T	0.66	0.72	0.78	0.83	0.56	0.61	0.67	0.72	0.51	0.56	0.61	0.67	0.39	0.44	0.49	0.54
		PI	0.70	0.71	0.71	0.70	0.70	0.70	0.70	0.70	0.70	0.70	0.70	0.70	0.71	0.71	0.71	0.71
	10	TC	3.60	3.61	3.61	3.61	3.81	3.87	3.87	3.87	3.92	3.92	3.92	3.92	4.20	4.20	4.20	4.20
		S/T	0.66	0.72	0.78	0.83	0.56	0.62	0.67	0.72	0.51	0.56	0.61	0.67	0.40	0.45	0.50	0.54
		PI	0.72	0.72	0.72	0.72	0.71	0.71	0.71	0.71	0.71	0.71	0.71	0.71	0.72	0.72	0.72	0.72
	15	TC	3.57	3.59	3.59	3.59	3.79	3.85	3.85	3.85	3.90	3.90	3.90	3.90	4.19	4.19	4.19	4.19
		S/T	0.67	0.73	0.79	0.84	0.57	0.62	0.68	0.73	0.52	0.57	0.62	0.68	0.40	0.45	0.50	0.55
		PI	0.73	0.74	0.74	0.73	0.73	0.73	0.73	0.73	0.73	0.73	0.73	0.73	0.73	0.73	0.73	0.73
	20	TC	3.53	3.54	3.54	3.54	3.75	3.75	3.75	3.75	3.86	3.86	3.86	3.86	4.15	4.15	4.15	4.15
		S/T	0.67	0.73	0.79	0.84	0.57	0.62	0.68	0.73	0.52	0.57	0.62	0.68	0.40	0.45	0.50	0.55
		PI	0.76	0.76	0.76	0.76	0.75	0.75	0.75	0.75	0.75	0.75	0.75	0.75	0.75	0.75	0.75	0.75
	25	TC	3.37	3.37	3.37	3.37	3.57	3.57	3.57	3.57	3.69	3.69	3.69	3.69	3.98	3.98	3.98	3.98
		S/T	0.68	0.74	0.80	0.86	0.57	0.63	0.68	0.74	0.52	0.57	0.63	0.68	0.40	0.45	0.50	0.55
		PI	0.83	0.83	0.83	0.83	0.83	0.83	0.83	0.83	0.83	0.83	0.83	0.83	0.83	0.83	0.83	0.83
	30	TC	3.20	3.20	3.20	3.20	3.43	3.43	3.43	3.43	3.52	3.52	3.52	3.52	3.80	3.80	3.80	3.80
		S/T	0.68	0.74	0.81	0.87	0.57	0.63	0.69	0.74	0.52	0.57	0.63	0.69	0.39	0.45	0.50	0.55
		PI	0.92	0.92	0.92	0.92	0.92	0.92	0.92	0.92	0.92	0.92	0.92	0.92	0.92	0.92	0.92	0.92
	35	TC	3.05	3.05	3.05	3.05	3.26	3.26	3.26	3.26	3.34	3.34	3.40	3.34	3.60	3.60	3.60	3.60
		S/T	0.68	0.75	0.82	0.88	0.57	0.63	0.69	0.75	0.51	0.57	0.63	0.69	0.39	0.44	0.50	0.56
		PI	1.00	1.00	1.00	1.00	1.01	1.01	1.01	1.01	1.01	1.01	1.01	1.01	1.02	1.02	1.02	1.02
	40	TC	2.89	2.89	2.89	2.91	3.09	3.09	3.09	3.09	3.18	3.18	3.21	3.18	3.43	3.43	3.43	3.43
		S/T	0.69	0.77	0.84	0.91	0.57	0.64	0.71	0.77	0.51	0.58	0.64	0.71	0.38	0.44	0.50	0.56
		PI	1.10	1.10	1.10	1.10	1.11	1.11	1.11	1.11	1.11	1.11	1.11	1.11	1.12	1.12	1.12	1.12
	46	TC	2.67	2.67	2.67	2.70	2.87	2.87	2.87	2.87	2.96	2.96	2.96	2.96	3.19	3.19	3.19	3.19
		S/T	0.70	0.78	0.85	0.92	0.57	0.64	0.71	0.78	0.51	0.58	0.65	0.72	0.38	0.44	0.50	0.57
		PI	1.23	1.23	1.23	1.23	1.23	1.23	1.23	1.23	1.23	1.23	1.23	1.23	1.24	1.24	1.24	1.24
	50	TC	2.53	2.53	2.53	2.55	2.70	2.70	2.70	2.70	2.79	2.79	2.79	2.79	3.02	3.02	3.02	3.02
		S/T	0.71	0.79	0.87	0.95	0.57	0.65	0.72	0.80	0.51	0.59	0.66	0.73	0.37	0.44	0.50	0.57
		PI	1.33	1.33	1.33	1.33	1.34	1.34	1.34	1.34	1.34	1.34	1.34	1.34	1.35	1.35	1.35	1.35

480	-15	TC	3.78	3.78	3.81	3.84	3.96	3.96	3.96	3.96	4.06	4.06	4.06	4.06	4.31	4.31	4.31	4.31
		S/T	0.70	0.79	0.98	1.00	0.56	0.65	0.72	0.81	0.50	0.58	0.66	0.73	0.35	0.42	0.49	0.57
		PI	0.72	0.72	0.72	0.72	0.72	0.72	0.72	0.72	0.72	0.72	0.72	0.72	0.71	0.71	0.71	0.71
	-10	TC	3.76	3.76	3.79	3.82	3.93	3.93	3.93	3.93	4.04	4.04	4.04	4.04	4.29	4.29	4.29	4.29
		S/T	0.71	0.80	0.99	1.00	0.56	0.65	0.73	0.82	0.50	0.58	0.66	0.74	0.35	0.43	0.49	0.57
		PI	0.71	0.71	0.71	0.71	0.72	0.72	0.72	0.72	0.72	0.72	0.72	0.72	0.71	0.71	0.71	0.71
	-5	TC	3.73	3.73	3.76	3.79	3.92	3.92	3.92	3.92	4.02	4.02	4.02	4.02	4.28	4.28	4.28	4.28
		S/T	0.71	0.80	0.99	1.00	0.57	0.65	0.73	0.82	0.51	0.59	0.66	0.74	0.35	0.43	0.50	0.58
		PI	0.71	0.71	0.71	0.71	0.71	0.71	0.71	0.71	0.72	0.72	0.72	0.72	0.71	0.71	0.71	0.71
	0	TC	3.72	3.72	3.75	3.77	3.91	3.91	3.91	3.91	4.01	4.01	4.01	4.01	4.28	4.28	4.28	4.28
		S/T	0.72	0.80	1.00	1.00	0.57	0.66	0.74	0.82	0.51	0.59	0.67	0.74	0.35	0.43	0.50	0.58
		PI	0.71	0.71	0.71	0.71	0.72	0.72	0.72	0.72	0.72	0.72	0.72	0.72	0.72	0.72	0.72	0.72
	5	TC	3.70	3.70	3.73	3.76	3.89	3.89	3.89	3.89	4.00	4.00	4.00	4.00	4.27	4.27	4.27	4.27
		S/T	0.72	0.81	1.00	1.00	0.57	0.66	0.74	0.83	0.51	0.59	0.67	0.75	0.35	0.43	0.50	0.58
		PI	0.72	0.72	0.72	0.72	0.72	0.72	0.72	0.72	0.73	0.73	0.73	0.73	0.72	0.72	0.72	0.72
	10	TC	3.67	3.67	3.70	3.73	3.87	3.87	3.87	3.87	3.98	3.98	3.98	3.98	4.26	4.26	4.26	4.26
		S/T	0.72	0.81	1.00	1.00	0.57	0.66	0.74	0.83	0.51	0.59	0.67	0.75	0.36	0.44	0.50	0.58
		PI	0.73	0.73	0.73	0.73	0.73	0.73	0.73	0.73	0.74	0.74	0.74	0.74	0.73	0.73	0.73	0.73
	15	TC	3.64	3.64	3.67	3.70	3.85	3.85	3.85	3.85	3.96	3.96	3.96	3.96	4.25	4.25	4.25	4.25
		S/T	0.73	0.82	0.90	0.99	0.58	0.67	0.75	0.84	0.52	0.60	0.68	0.76	0.36	0.44	0.51	0.59
		PI	0.75	0.75	0.75	0.75	0.75	0.75	0.75	0.75	0.75	0.75	0.75	0.75	0.75	0.75	0.75	0.75
	20	TC	3.60	3.60	3.63	3.66	3.81	3.81	3.81	3.81	3.92	3.92	3.92	3.92	4.21	4.21	4.21	4.21
		S/T	0.73	0.82	0.90	0.99	0.58	0.67	0.75	0.84	0.52	0.60	0.68	0.76	0.36	0.44	0.51	0.59
		PI	0.78	0.78	0.78	0.78	0.78	0.78	0.78	0.78	0.78	0.78	0.78	0.78	0.77	0.77	0.77	0.77
	25	TC	3.43	3.43	3.46	3.49	3.63	3.63	3.63	3.63	3.75	3.75	3.75	3.75	4.04	4.04	4.04	4.04
		S/T	0.74	0.83	0.92	1.00	0.59	0.68	0.77	0.85	0.52	0.60	0.69	0.78	0.36	0.44	0.52	0.60
		PI	0.86	0.86	0.86	0.86	0.86	0.86	0.86	0.86	0.86	0.86	0.86	0.86	0.86	0.86	0.86	0.86
	30	TC	3.26	3.26	3.29	3.32	3.49	3.49	3.49	3.49	3.57	3.57	3.57	3.57	3.86	3.86	3.86	3.86
		S/T	0.75	0.85	0.94	1.00	0.59	0.68	0.78	0.87	0.52	0.61	0.70	0.79	0.35	0.44	0.52	0.60
		PI	0.94	0.94	0.94	0.94	0.94	0.94	0.94	0.94	0.94	0.94	0.94	0.94	0.94	0.94	0.94	0.94
	35	TC	3.11	3.11	3.14	3.17	3.32	3.32	3.32	3.34	3.40	3.40	3.46	3.40	3.66	3.66	3.66	3.66
		S/T	0.76	0.86	0.96	1.00	0.60	0.69	0.79	0.89	0.52	0.62	0.71	0.81	0.35	0.44	0.53	0.61
		PI	1.03	1.03	1.03	1.03	1.03	1.03	1.03	1.03	1.03	1.03	1.04	1.03	1.03	1.03	1.03	1.03
	40	TC	2.89	2.91	2.94	2.96	3.08	3.08	3.08	3.11	3.17	3.17	3.20	3.17	3.42	3.42	3.42	3.42
		S/T	0.79	0.90	1.00	1.00	0.61	0.72	0.83	0.93	0.53	0.63	0.74	0.84	0.34	0.44	0.54	0.63
		PI	1.14	1.14	1.14	1.14	1.14	1.14	1.14	1.14	1.14	1.14	1.14	1.14	1.15	1.15	1.15	1.15
	46	TC	2.68	2.71	2.73	2.76	2.85	2.85	2.85	2.88	2.93	2.93	2.93	2.93	3.19	3.19	3.19	3.19
		S/T	0.80	0.91	1.00	1.00	0.62	0.73	0.84	0.95	0.53	0.64	0.75	0.86	0.34	0.44	0.54	0.64
		PI	1.26	1.26	1.26	1.26	1.27	1.27	1.27	1.27	1.27	1.27	1.27	1.27	1.28	1.28	1.28	1.28
	50	TC	2.51	2.53	2.56	2.59	2.68	2.68	2.68	2.71	2.76	2.76	2.76	2.79	3.02	3.02	3.02	3.02
		S/T	0.82	0.94	1.00	1.00	0.63	0.75	0.87	0.98	0.54	0.65	0.77	0.88	0.34	0.44	0.55	0.91
		PI	1.37	1.37	1.37	1.37	1.38	1.38	1.38	1.38	1.38	1.38	1.38	1.38	1.39	1.39	1.39	1.39
600	-15	TC	3.84	3.87	3.90	3.93	4.02	4.02	4.02	4.05	4.12	4.12	4.12	4.12	4.40	4.40	4.40	4.40
		S/T	0.74	0.85	1.00	1.00	0.59	0.69	0.79	0.98	0.51	0.61	0.70	0.80	0.34	0.42	0.51	0.61
		PI	0.73	0.73	0.73	0.73	0.73	0.73	0.73	0.73	0.73	0.73	0.73	0.73	0.73	0.73	0.73	0.73
	-10	TC	3.82	3.85	3.88	3.91	3.99	3.99	3.99	4.02	4.10	4.10	4.10	4.10	4.38	4.38	4.38	4.38
		S/T	0.75	0.85	1.00	1.00	0.59	0.69	0.80	0.98	0.51	0.61	0.71	0.81	0.34	0.43	0.51	0.61
		PI	0.73	0.73	0.73	0.73	0.72	0.72	0.72	0.72	0.73	0.73	0.73	0.73	0.73	0.73	0.73	0.73
	-5	TC	3.79	3.82	3.85	3.88	3.98	3.98	3.98	4.01	4.08	4.08	4.08	4.08	4.37	4.37	4.37	4.37
		S/T	0.75	0.86	1.00	1.00	0.59	0.69	0.80	0.99	0.52	0.61	0.71	0.81	0.34	0.43	0.52	0.61
		PI	0.73	0.73	0.73	0.73	0.72	0.72	0.72	0.72	0.73	0.73	0.73	0.73	0.73	0.73	0.73	0.73
	0	TC	3.77	3.80	3.83	3.86	3.96	3.96	3.96	3.99	4.07	4.07	4.07	4.07	4.37	4.37	4.37	4.37
		S/T	0.75	0.86	1.00	1.00	0.60	0.70	0.80	0.99	0.52	0.62	0.72	0.81	0.34	0.43	0.52	0.62
		PI	0.73	0.73	0.73	0.73	0.73	0.73	0.73	0.73	0.73	0.73	0.73	0.73	0.73	0.73	0.73	0.73
	5	TC	3.76	3.79	3.82	3.84	3.95	3.95	3.95	3.98	4.06	4.06	4.06	4.06	4.36	4.36	4.36	4.36
		S/T	0.76	0.87	1.00	1.00	0.60	0.70	0.81	1.00	0.52	0.62	0.72	0.82	0.34	0.43	0.52	0.62
		PI	0.74	0.74	0.74	0.74	0.73	0.73	0.73	0.73	0.73	0.73	0.73	0.73	0.74	0.74	0.74	0.74
	10	TC	3.73	3.76	3.79	3.82	3.93	3.93	3.93	3.96	4.04	4.04	4.04	4.04	4.35	4.35	4.35	4.35
		S/T	0.76	0.87	1.00	1.00	0.60	0.70	0.81	1.00	0.52	0.62	0.72	0.82	0.35	0.44	0.52	0.62
		PI	0.75	0.75	0.75	0.75	0.74	0.74	0.74	0.74	0.75	0.75	0.75	0.75	0.75	0.75	0.75	0.75
	15	TC	3.70	3.73	3.76	3.79	3.90	3.90	3.90	3.93	4.02	4.02	4.02	4.02	4.33	4.33	4.33	4.33
		S/T	0.77	0.88	0.99	1.00	0.61	0.71	0.82	0.92	0.53	0.63	0.73	0.83	0.35	0.44	0.53	0.63
		PI	0.77	0.77	0.77	0.77	0.76	0.76	0.76	0.76	0.76	0.76	0.76	0.76	0.76	0.76	0.76	0.76
	20	TC	3.66	3.69	3.72	3.75	3.86	3.86	3.86	3.89	3.98	3.98	3.98	3.98	4.30	4.30	4.30	4.30
		S/T	0.77	0.88	0.99	1.00	0.61	0.71	0.82	0.92	0.53	0.63	0.73	0.83	0.35	0.44	0.53	0.63
		PI	0.80	0.80	0.80	0.80	0.79	0.79	0.79	0.79	0.79	0.79	0.79	0.79	0.79	0.79	0.79	0.79
	25	TC	3.49	3.52	3.55	3.57	3.69	3.69	3.69	3.72	3.81	3.81	3.81	3.81	4.09	4.09	4.09	4.09
		S/T	0.79	0.90	1.00	1.00	0.61	0.72	0.83	0.94	0.53	0.64	0.74	0.85	0.34	0.44	0.54	0.64
		PI	0.88	0.88	0.88	0.88	0.88	0.88	0.88	0.88	0.88	0.88	0.88	0.88	0.88	0.88	0.88	0.88
	30	TC	3.32	3.34	3.37	3.40	3.55	3.55	3.55	3.57	3.63	3.63	3.63	3.63	3.92	3.92	3.92	3.92
		S/T	0.80	0.92	1.00	1.00	0.62	0.73	0.85	0.96	0.53	0.65	0.76	0.87	0.34	0.44	0.55	0.65
		PI	0.95	0.95	0.95	0.95	0.95	0.95	0.95	0.95	0.95	0.95	0.95	0.95	0.96	0.96	0.96	0.96
	35	TC	3.14	3.17	3.20	3.23	3.37	3.37	3.37	3.40	3.46	3.46	**3.52**	3.55	3.75	3.75	3.75	3.75
		S/T	0.82	0.95	1.00	1.00	0.63	0.75	0.87	0.98	0.54	0.66	**0.77**	0.88	0.34	0.44	0.55	0.66
		PI	1.04	1.04	1.04	1.04	1.05	1.05	1.05	1.05	1.05	1.05	**1.05**	1.05	1.06	1.06	1.06	1.06
	40	TC	2.92	2.95	2.98	3.01	3.14	3.14	3.15	3.18	3.22	3.22	3.25	3.28	3.50	3.50	3.50	3.50
		S/T	0.85	0.99	1.00	1.00	0.65	0.78	0.91	1.00	0.55	0.68	0.80	0.93	0.33	0.45	0.57	0.90
		PI	1.15	1.15	1.15	1.15	1.16	1.16	1.16	1.16	1.16	1.16	1.16	1.16	1.17	1.17	1.17	1.17
	46	TC	2.71	2.73	2.76	2.79	2.90	2.90	2.93	2.96	2.99	2.99	2.99	3.02	3.25	3.25	3.25	3.25
		S/T	0.87	1.00	1.00	1.00	0.65	0.79	0.92	1.00	0.56	0.69	0.82	0.95	0.33	0.45	0.57	0.92
		PI	1.28	1.28	1.28	1.28	1.29	1.29	1.29	1.29	1.29	1.29	1.29	1.29	1.30	1.30	1.30	1.30
	50	TC	2.56	2.59	2.62	2.65	2.73	2.73	2.76	2.79	2.82	2.82	2.82	2.85	3.05	3.05	3.05	3.05
		S/T	0.89	1.00	1.00	1.00	0.67	0.81	0.95	1.00	0.56	0.70	0.85	0.98	0.32	0.46	0.59	0.97
		PI	1.39	1.39	1.39	1.39	1.40	1.40	1.40	1.40	1.40	1.40	1.40	1.40	1.41	1.41	1.41	1.41

TC:Total Cooling Capacity (kW)

S/T:Sensible Cooling Capacity Ratio

PI:Power Input(kW)

Note: The table shows the case where the operation frequency of a compressor is fixed.

18k																		
INDOOR AIRFLOW (CMH)	OUTDOOR DB(℃)	ID WB (℃)	16.0				18.0				19.0				22.0			
		ID DB (℃)	23.0	25.0	27.0	29.0	23.0	25.0	27.0	29.0	23.0	25.0	27.0	29.0	23.0	25.0	27.0	29.0
515	-15	TC	5.50	5.50	5.50	5.50	5.78	5.90	5.90	5.90	5.93	5.93	5.93	5.93	6.28	6.28	6.28	6.28
		S/T	0.66	0.72	0.79	0.85	0.55	0.61	0.67	0.72	0.49	0.55	0.61	0.67	0.38	0.42	0.48	0.54
		PI	1.02	1.02	1.02	1.02	1.01	1.01	1.01	1.01	1.01	1.01	1.01	1.01	1.02	1.02	1.02	1.02
	-10	TC	5.46	5.47	5.47	5.47	5.75	5.87	5.87	5.87	5.90	5.90	5.90	5.90	6.25	6.25	6.25	6.25
		S/T	0.66	0.73	0.80	0.85	0.55	0.61	0.67	0.73	0.49	0.55	0.61	0.67	0.38	0.43	0.49	0.54
		PI	1.01	1.02	1.02	1.01	1.01	1.01	1.01	1.01	1.01	1.01	1.01	1.01	1.02	1.02	1.02	1.02
	-5	TC	5.43	5.43	5.43	5.43	5.73	5.85	5.85	5.85	5.88	5.88	5.88	5.88	6.24	6.24	6.24	6.24
		S/T	0.66	0.73	0.80	0.86	0.56	0.61	0.67	0.73	0.50	0.56	0.61	0.67	0.38	0.43	0.49	0.55
		PI	1.01	1.01	1.01	1.01	1.01	1.01	1.01	1.01	1.01	1.01	1.01	1.01	1.02	1.02	1.02	1.02
	0	TC	5.40	5.41	5.41	5.41	5.71	5.83	5.83	5.83	5.87	5.87	5.87	5.87	6.23	6.23	6.23	6.23
		S/T	0.67	0.74	0.80	0.86	0.56	0.62	0.68	0.74	0.50	0.56	0.62	0.68	0.38	0.43	0.49	0.55
		PI	1.02	1.02	1.02	1.02	1.01	1.01	1.01	1.01	1.02	1.02	1.02	1.02	1.02	1.02	1.02	1.02
	5	TC	5.38	5.38	5.38	5.38	5.68	5.80	5.80	5.80	5.85	5.85	5.85	5.85	6.23	6.23	6.23	6.23
		S/T	0.67	0.74	0.81	0.87	0.56	0.62	0.68	0.74	0.50	0.56	0.62	0.68	0.38	0.43	0.49	0.55
		PI	1.03	1.03	1.03	1.03	1.02	1.02	1.02	1.02	1.02	1.02	1.02	1.02	1.03	1.03	1.03	1.03
	10	TC	5.34	5.35	5.35	5.35	5.66	5.78	5.78	5.78	5.82	5.82	5.82	5.82	6.21	6.21	6.21	6.21
		S/T	0.67	0.74	0.81	0.87	0.56	0.62	0.68	0.74	0.50	0.56	0.62	0.68	0.39	0.44	0.50	0.55
		PI	1.04	1.05	1.05	1.04	1.04	1.04	1.04	1.04	1.04	1.04	1.04	1.04	1.04	1.04	1.04	1.04
	15	TC	5.30	5.30	5.30	5.30	5.62	5.74	5.74	5.74	5.79	5.79	5.79	5.79	6.19	6.19	6.19	6.19
		S/T	0.68	0.75	0.82	0.88	0.57	0.63	0.69	0.75	0.51	0.57	0.63	0.69	0.39	0.44	0.50	0.56
		PI	1.07	1.07	1.07	1.07	1.06	1.06	1.06	1.06	1.06	1.06	1.06	1.06	1.07	1.07	1.07	1.07
	20	TC	5.24	5.24	5.24	5.24	5.56	5.56	5.56	5.56	5.73	5.73	5.73	5.73	6.13	6.13	6.13	6.13
		S/T	0.68	0.75	0.82	0.88	0.57	0.63	0.69	0.75	0.51	0.57	0.63	0.69	0.39	0.44	0.50	0.56
		PI	1.11	1.11	1.11	1.11	1.10	1.10	1.10	1.10	1.10	1.10	1.10	1.10	1.10	1.10	1.10	1.10
	25	TC	4.99	4.99	4.99	5.04	5.30	5.30	5.30	5.30	5.47	5.47	5.47	5.47	5.87	5.87	5.87	5.87
		S/T	0.69	0.76	0.83	0.89	0.57	0.63	0.70	0.76	0.51	0.58	0.64	0.70	0.38	0.44	0.50	0.56
		PI	1.22	1.22	1.22	1.22	1.22	1.22	1.22	1.22	1.22	1.22	1.22	1.22	1.22	1.22	1.22	1.22
	30	TC	4.76	4.76	4.76	4.81	5.07	5.07	5.07	5.07	5.22	5.22	5.22	5.22	5.62	5.62	5.62	5.62
		S/T	0.69	0.77	0.84	0.91	0.57	0.64	0.71	0.77	0.51	0.58	0.64	0.71	0.38	0.44	0.50	0.56
		PI	1.33	1.33	1.33	1.33	1.33	1.33	1.33	1.33	1.34	1.34	1.34	1.34	1.34	1.34	1.34	1.34
	35	TC	4.53	4.53	4.53	4.59	4.81	4.81	4.81	4.81	4.96	4.96	5.04	4.96	5.36	5.36	5.36	5.36
		S/T	0.70	0.78	0.85	0.92	0.57	0.64	0.71	0.79	0.51	0.58	0.65	0.72	0.37	0.44	0.50	0.57
		PI	1.46	1.46	1.46	1.46	1.46	1.46	1.46	1.46	1.47	1.47	1.47	1.47	1.48	1.48	1.48	1.48
	40	TC	4.28	4.28	4.29	4.34	4.55	4.55	4.55	4.55	4.70	4.70	4.74	4.70	5.07	5.07	5.07	5.07
		S/T	0.71	0.80	0.88	0.96	0.58	0.66	0.73	0.81	0.51	0.59	0.67	0.74	0.37	0.44	0.51	0.58
		PI	1.61	1.61	1.61	1.61	1.61	1.61	1.61	1.61	1.62	1.62	1.62	1.62	1.63	1.63	1.63	1.63
	46	TC	3.97	3.97	4.00	4.02	4.22	4.22	4.22	4.22	4.37	4.37	4.37	4.37	4.71	4.71	4.71	4.71
		S/T	0.72	0.81	0.89	0.98	0.58	0.66	0.74	0.83	0.51	0.59	0.67	0.75	0.36	0.44	0.51	0.58
		PI	1.79	1.79	1.79	1.79	1.80	1.80	1.80	1.80	1.80	1.80	1.80	1.80	1.82	1.82	1.82	1.82
	50	TC	3.71	3.71	3.74	3.77	3.97	3.97	3.97	3.97	4.11	4.11	4.11	4.11	4.45	4.45	4.45	4.45
		S/T	0.73	0.83	0.92	1.00	0.59	0.67	0.76	0.85	0.52	0.60	0.68	0.77	0.36	0.44	0.51	0.59
		PI	1.94	1.94	1.94	1.94	1.95	1.95	1.95	1.95	1.95	1.95	1.95	1.95	1.97	1.97	1.97	1.97
706	-15	TC	5.62	5.62	5.68	5.74	5.90	5.90	5.90	5.90	6.06	6.06	6.06	6.06	6.43	6.43	6.43	6.43
		S/T	0.70	0.78	0.98	1.00	0.56	0.64	0.72	0.80	0.49	0.58	0.66	0.73	0.35	0.42	0.49	0.57
		PI	1.04	1.04	1.04	1.04	1.04	1.04	1.04	1.04	1.03	1.03	1.03	1.03	1.04	1.04	1.04	1.04
	-10	TC	5.59	5.59	5.65	5.71	5.87	5.87	5.87	5.87	6.03	6.03	6.03	6.03	6.40	6.40	6.40	6.40
		S/T	0.70	0.79	0.99	1.00	0.56	0.64	0.73	0.81	0.49	0.58	0.66	0.74	0.35	0.43	0.49	0.57
		PI	1.03	1.03	1.03	1.03	1.04	1.04	1.04	1.04	1.03	1.03	1.03	1.03	1.04	1.04	1.04	1.04
	-5	TC	5.56	5.56	5.62	5.67	5.85	5.85	5.85	5.85	6.00	6.00	6.00	6.00	6.39	6.39	6.39	6.39
		S/T	0.70	0.79	0.99	1.00	0.57	0.64	0.73	0.81	0.50	0.59	0.66	0.74	0.35	0.43	0.50	0.58
		PI	1.03	1.03	1.03	1.03	1.04	1.04	1.04	1.04	1.03	1.03	1.03	1.03	1.04	1.04	1.04	1.04
	0	TC	5.53	5.53	5.59	5.65	5.83	5.83	5.83	5.83	5.99	5.99	5.99	5.99	6.38	6.38	6.38	6.38
		S/T	0.71	0.79	1.00	1.00	0.57	0.65	0.74	0.81	0.50	0.59	0.67	0.74	0.35	0.43	0.50	0.58
		PI	1.04	1.04	1.04	1.04	1.04	1.04	1.04	1.04	1.03	1.03	1.03	1.03	1.04	1.04	1.04	1.04
	5	TC	5.50	5.50	5.56	5.62	5.80	5.80	5.80	5.80	5.97	5.97	5.97	5.97	6.38	6.38	6.38	6.38
		S/T	0.71	0.80	1.00	1.00	0.57	0.65	0.74	0.82	0.50	0.59	0.67	0.75	0.35	0.43	0.50	0.58
		PI	1.05	1.05	1.05	1.05	1.05	1.05	1.05	1.05	1.04	1.04	1.04	1.04	1.05	1.05	1.05	1.05
	10	TC	5.47	5.47	5.53	5.58	5.78	5.78	5.78	5.78	5.94	5.94	5.94	5.94	6.36	6.36	6.36	6.36
		S/T	0.71	0.80	1.00	1.00	0.57	0.65	0.74	0.82	0.50	0.59	0.67	0.75	0.36	0.44	0.50	0.58
		PI	1.06	1.06	1.06	1.06	1.07	1.07	1.07	1.07	1.06	1.06	1.06	1.06	1.06	1.06	1.06	1.06
	15	TC	5.42	5.42	5.48	5.54	5.74	5.74	5.74	5.74	5.91	5.91	5.91	5.91	6.33	6.33	6.33	6.33
		S/T	0.72	0.81	0.90	0.98	0.58	0.66	0.75	0.83	0.51	0.60	0.68	0.76	0.36	0.44	0.51	0.59
		PI	1.09	1.09	1.09	1.09	1.09	1.09	1.09	1.09	1.08	1.08	1.08	1.08	1.09	1.09	1.09	1.09
	20	TC	5.36	5.36	5.42	5.48	5.68	5.68	5.68	5.68	5.85	5.85	5.85	5.85	6.28	6.28	6.28	6.28
		S/T	0.72	0.81	0.90	0.98	0.58	0.66	0.75	0.83	0.51	0.60	0.68	0.76	0.36	0.44	0.51	0.59
		PI	1.13	1.13	1.13	1.13	1.13	1.13	1.13	1.13	1.12	1.12	1.12	1.12	1.12	1.12	1.12	1.12
	25	TC	5.10	5.10	5.16	5.22	5.42	5.42	5.42	5.42	5.59	5.59	5.59	5.59	6.02	6.02	6.02	6.02
		S/T	0.73	0.83	0.91	1.00	0.59	0.67	0.76	0.85	0.52	0.60	0.69	0.77	0.36	0.44	0.51	0.59
		PI	1.25	1.25	1.25	1.25	1.25	1.25	1.25	1.25	1.25	1.25	1.25	1.25	1.25	1.25	1.25	1.25
	30	TC	4.87	4.87	4.93	4.99	5.19	5.19	5.19	5.19	5.33	5.33	5.33	5.33	5.76	5.76	5.76	5.76
		S/T	0.74	0.84	0.93	1.00	0.59	0.68	0.77	0.86	0.52	0.61	0.70	0.78	0.35	0.44	0.52	0.60
		PI	1.36	1.36	1.36	1.36	1.36	1.36	1.36	1.36	1.36	1.36	1.36	1.36	1.37	1.37	1.37	1.37
	35	TC	4.62	4.62	4.67	4.73	4.93	4.93	4.93	4.93	5.07	5.07	5.16	5.07	5.48	5.48	5.48	5.48
		S/T	0.76	0.86	0.96	1.00	0.60	0.69	0.79	0.88	0.52	0.61	0.70	0.80	0.35	0.44	0.52	0.61
		PI	1.49	1.49	1.49	1.49	1.49	1.49	1.49	1.49	1.50	1.50	1.50	1.50	1.50	1.50	1.50	1.50
	40	TC	4.29	4.30	4.34	4.39	4.57	4.57	4.57	4.60	4.71	4.71	4.76	4.71	5.09	5.09	5.09	5.09
		S/T	0.78	0.89	1.00	1.00	0.61	0.71	0.82	0.92	0.53	0.63	0.73	0.83	0.35	0.44	0.53	0.63
		PI	1.65	1.65	1.65	1.65	1.65	1.65	1.65	1.65	1.66	1.66	1.66	1.66	1.67	1.67	1.67	1.67
	46	TC	3.98	4.01	4.03	4.06	4.23	4.23	4.23	4.29	4.37	4.37	4.37	4.37	4.74	4.74	4.74	4.74
		S/T	0.79	0.91	1.00	1.00	0.61	0.72	0.83	0.94	0.53	0.64	0.74	0.85	0.34	0.44	0.54	0.64
		PI	1.83	1.83	1.83	1.83	1.84	1.84	1.84	1.84	1.85	1.85	1.85	1.85	1.86	1.86	1.86	1.86
	50	TC	3.72	3.75	3.78	3.81	3.98	3.98	3.98	4.01	4.12	4.12	4.12	4.12	4.46	4.46	4.46	4.46
		S/T	0.81	0.93	1.00	1.00	0.62	0.74	0.86	0.97	0.54	0.65	0.76	0.88	0.34	0.44	0.55	0.91
		PI	1.99	1.99	1.99	1.99	2.00	2.00	2.00	2.00	2.00	2.00	2.00	2.00	2.02	2.02	2.02	2.02

911	-15	TC	5.74	5.80	5.86	5.92	6.05	6.05	6.05	6.11	6.20	6.20	6.20	6.20	6.57	6.57	6.57	6.57
		S/T	0.75	0.85	1.00	1.00	0.59	0.69	0.79	0.98	0.51	0.61	0.70	0.80	0.33	0.42	0.51	0.61
		PI	1.06	1.06	1.06	1.06	1.06	1.06	1.06	1.06	1.06	1.06	1.06	1.06	1.05	1.05	1.05	1.05
	-10	TC	5.71	5.77	5.83	5.89	6.02	6.02	6.02	6.08	6.17	6.17	6.17	6.17	6.55	6.55	6.55	6.55
		S/T	0.76	0.85	1.00	1.00	0.59	0.69	0.80	0.98	0.51	0.61	0.71	0.81	0.33	0.43	0.51	0.61
		PI	1.05	1.05	1.05	1.05	1.06	1.06	1.06	1.06	1.06	1.06	1.06	1.06	1.05	1.05	1.05	1.05
	-5	TC	5.67	5.73	5.79	5.85	6.00	6.00	6.00	6.06	6.15	6.15	6.15	6.15	6.53	6.53	6.53	6.53
		S/T	0.76	0.86	1.00	1.00	0.59	0.69	0.80	0.99	0.52	0.61	0.71	0.81	0.33	0.43	0.52	0.61
		PI	1.05	1.05	1.05	1.05	1.05	1.05	1.05	1.05	1.06	1.06	1.06	1.06	1.06	1.06	1.06	1.06
	0	TC	5.65	5.71	5.76	5.82	5.97	5.97	5.97	6.03	6.13	6.13	6.13	6.13	6.53	6.53	6.53	6.53
		S/T	0.76	0.86	1.00	1.00	0.60	0.70	0.80	0.99	0.52	0.62	0.72	0.81	0.33	0.43	0.52	0.62
		PI	1.05	1.05	1.05	1.05	1.06	1.06	1.06	1.06	1.06	1.06	1.06	1.06	1.06	1.06	1.06	1.06
	5	TC	5.62	5.68	5.74	5.79	5.95	5.95	5.95	6.01	6.11	6.11	6.11	6.11	6.52	6.52	6.52	6.52
		S/T	0.77	0.87	1.00	1.00	0.60	0.70	0.81	1.00	0.52	0.62	0.72	0.82	0.33	0.43	0.52	0.62
		PI	1.06	1.06	1.06	1.06	1.07	1.07	1.07	1.07	1.07	1.07	1.07	1.07	1.07	1.07	1.07	1.07
	10	TC	5.58	5.64	5.70	5.76	5.92	5.92	5.92	5.98	6.09	6.09	6.09	6.09	6.51	6.51	6.51	6.51
		S/T	0.77	0.87	1.00	1.00	0.60	0.70	0.81	1.00	0.52	0.62	0.72	0.82	0.34	0.44	0.52	0.62
		PI	1.08	1.08	1.08	1.08	1.08	1.08	1.08	1.08	1.09	1.09	1.09	1.09	1.08	1.08	1.08	1.08
	15	TC	5.54	5.60	5.65	5.71	5.88	5.88	5.88	5.94	6.05	6.05	6.05	6.05	6.48	6.48	6.48	6.48
		S/T	0.78	0.88	0.99	1.00	0.61	0.71	0.82	0.92	0.53	0.63	0.73	0.83	0.34	0.44	0.53	0.63
		PI	1.11	1.11	1.11	1.11	1.11	1.11	1.11	1.11	1.11	1.11	1.11	1.11	1.10	1.10	1.10	1.10
	20	TC	5.48	5.53	5.59	5.65	5.82	5.82	5.82	5.88	5.99	5.99	5.99	5.99	6.42	6.42	6.42	6.42
		S/T	0.78	0.88	0.99	1.00	0.61	0.71	0.82	0.92	0.53	0.63	0.73	0.83	0.34	0.44	0.53	0.63
		PI	1.15	1.15	1.15	1.15	1.15	1.15	1.15	1.15	1.15	1.15	1.15	1.15	1.14	1.14	1.14	1.14
	25	TC	5.22	5.28	5.33	5.39	5.56	5.56	5.56	5.62	5.73	5.73	5.73	5.73	6.16	6.16	6.16	6.16
		S/T	0.79	0.90	1.00	1.00	0.61	0.72	0.83	0.94	0.53	0.64	0.74	0.85	0.34	0.44	0.54	0.64
		PI	1.27	1.27	1.27	1.27	1.27	1.27	1.27	1.27	1.27	1.27	1.27	1.27	1.27	1.27	1.27	1.27
	30	TC	4.99	5.05	5.10	5.16	5.30	5.30	5.30	5.36	5.45	5.45	5.45	5.45	5.88	5.88	5.88	5.88
		S/T	0.81	0.92	1.00	1.00	0.62	0.74	0.85	0.96	0.54	0.65	0.76	0.87	0.34	0.44	0.55	0.65
		PI	1.39	1.39	1.39	1.39	1.39	1.39	1.39	1.39	1.39	1.39	1.39	1.39	1.40	1.40	1.40	1.40
	35	TC	4.73	4.79	4.85	4.90	5.05	5.05	5.05	5.10	5.19	5.19	**5.28**	5.33	5.59	5.59	5.59	5.59
		S/T	0.82	0.95	1.00	1.00	0.63	0.75	0.87	0.99	0.54	0.66	**0.77**	0.88	0.34	0.44	0.55	0.66
		PI	1.52	1.52	1.52	1.52	1.52	1.52	1.52	1.52	1.53	1.53	**1.53**	1.53	1.54	1.54	1.54	1.54
	40	TC	4.39	4.43	4.47	4.52	4.68	4.68	4.71	4.77	4.82	4.82	4.87	4.93	5.21	5.21	5.21	5.21
		S/T	0.86	0.99	1.00	1.00	0.65	0.78	0.91	1.00	0.55	0.68	0.81	0.93	0.33	0.45	0.57	0.90
		PI	1.68	1.68	1.68	1.68	1.69	1.69	1.69	1.69	1.69	1.69	1.69	1.69	1.71	1.71	1.71	1.71
	46	TC	4.06	4.09	4.12	4.15	4.35	4.35	4.40	4.46	4.49	4.49	4.49	4.54	4.85	4.85	4.85	4.85
		S/T	0.87	1.00	1.00	1.00	0.65	0.79	0.93	1.00	0.56	0.69	0.82	0.95	0.33	0.45	0.58	0.92
		PI	1.87	1.87	1.87	1.87	1.88	1.88	1.88	1.88	1.88	1.88	1.88	1.88	1.90	1.90	1.90	1.90
	50	TC	3.81	3.84	3.87	3.89	4.06	4.06	4.09	4.12	4.20	4.20	4.20	4.23	4.57	4.57	4.57	4.57
		S/T	0.90	1.00	1.00	1.00	0.67	0.82	0.96	1.00	0.56	0.71	0.85	0.99	0.32	0.46	0.59	0.97
		PI	2.03	2.03	2.03	2.03	2.04	2.04	2.04	2.04	2.04	2.04	2.04	2.04	2.06	2.06	2.06	2.06

TC:Total Cooling Capacity (kW)

S/T:Sensible Cooling Capacity Ratio

PI:Power Input(kW)

Note: The table shows the case where the operation frequency of a compressor is fixed.

24k																		
INDOOR AIRFLOW (CMH)	OUTDOOR DB(℃)	ID WB (℃)	16.0				18.0				19.0				22.0			
		ID DB (℃)	23.0	25.0	27.0	29.0	23.0	25.0	27.0	29.0	23.0	25.0	27.0	29.0	23.0	25.0	27.0	29.0

825	-15	TC	7.35	7.34	7.34	7.40	7.73	7.88	7.88	7.88	7.93	7.93	7.93	7.93	8.40	8.40	8.40	8.40
		S/T	0.69	0.75	0.83	0.91	0.55	0.63	0.70	0.77	0.49	0.56	0.64	0.70	0.36	0.42	0.48	0.55
		PI	1.46	1.47	1.47	1.46	1.46	1.46	1.46	1.46	1.46	1.46	1.46	1.46	1.45	1.45	1.45	1.45
	-10	TC	7.31	7.30	7.30	7.36	7.69	7.84	7.84	7.84	7.89	7.89	7.89	7.89	8.37	8.37	8.37	8.37
		S/T	0.69	0.76	0.83	0.91	0.55	0.63	0.70	0.78	0.49	0.56	0.64	0.71	0.36	0.43	0.49	0.55
		PI	1.46	1.46	1.46	1.46	1.45	1.45	1.45	1.45	1.46	1.46	1.46	1.46	1.46	1.46	1.46	1.46
	-5	TC	7.26	7.26	7.26	7.32	7.66	7.81	7.81	7.81	7.86	7.86	7.86	7.86	8.35	8.35	8.35	8.35
		S/T	0.69	0.76	0.84	0.92	0.56	0.63	0.70	0.78	0.50	0.57	0.64	0.71	0.36	0.43	0.49	0.56
		PI	1.45	1.46	1.46	1.45	1.45	1.45	1.45	1.45	1.46	1.46	1.46	1.46	1.46	1.46	1.46	1.46
	0	TC	7.23	7.22	7.22	7.28	7.63	7.78	7.78	7.78	7.84	7.84	7.84	7.84	8.34	8.34	8.34	8.34
		S/T	0.70	0.76	0.84	0.92	0.56	0.64	0.71	0.78	0.50	0.57	0.65	0.72	0.36	0.43	0.49	0.56
		PI	1.46	1.46	1.46	1.46	1.46	1.46	1.46	1.46	1.46	1.46	1.46	1.46	1.46	1.46	1.46	1.46
	5	TC	7.19	7.18	7.18	7.24	7.60	7.75	7.75	7.75	7.82	7.82	7.82	7.82	8.34	8.34	8.34	8.34
		S/T	0.70	0.77	0.85	0.93	0.56	0.64	0.71	0.79	0.50	0.57	0.65	0.72	0.36	0.43	0.49	0.56
		PI	1.47	1.48	1.48	1.47	1.47	1.47	1.47	1.47	1.47	1.47	1.47	1.47	1.47	1.47	1.47	1.47
	10	TC	7.15	7.14	7.14	7.20	7.56	7.71	7.71	7.71	7.79	7.79	7.79	7.79	8.31	8.31	8.31	8.31
		S/T	0.70	0.77	0.85	0.93	0.56	0.64	0.71	0.79	0.50	0.57	0.65	0.72	0.37	0.44	0.50	0.56
		PI	1.50	1.50	1.50	1.50	1.49	1.49	1.49	1.49	1.50	1.50	1.50	1.50	1.49	1.49	1.49	1.49
	15	TC	7.09	7.08	7.08	7.14	7.51	7.66	7.66	7.66	7.74	7.74	7.74	7.74	8.28	8.28	8.28	8.28
		S/T	0.71	0.78	0.86	0.94	0.57	0.64	0.72	0.80	0.51	0.58	0.66	0.73	0.37	0.44	0.50	0.57
		PI	1.53	1.54	1.54	1.53	1.53	1.53	1.53	1.53	1.53	1.53	1.53	1.53	1.52	1.52	1.52	1.52
	20	TC	7.01	7.00	7.00	7.06	7.43	7.43	7.43	7.43	7.66	7.66	7.66	7.66	8.21	8.21	8.21	8.21
		S/T	0.71	0.78	0.86	0.94	0.57	0.65	0.72	0.80	0.51	0.58	0.66	0.73	0.37	0.44	0.50	0.57
		PI	1.59	1.59	1.59	1.59	1.58	1.58	1.58	1.58	1.58	1.58	1.58	1.58	1.57	1.57	1.57	1.57
	25	TC	6.69	6.69	6.69	6.74	7.09	7.09	7.09	7.09	7.32	7.32	7.32	7.32	7.86	7.86	7.86	7.86
		S/T	0.71	0.79	0.88	0.96	0.58	0.65	0.73	0.81	0.51	0.59	0.66	0.74	0.37	0.44	0.51	0.58
		PI	1.75	1.75	1.75	1.75	1.75	1.75	1.75	1.75	1.75	1.75	1.75	1.75	1.75	1.75	1.75	1.75
	30	TC	6.37	6.37	6.43	6.49	6.77	6.77	6.77	6.77	6.97	6.97	6.97	6.97	7.52	7.52	7.52	7.52
		S/T	0.72	0.81	0.89	0.97	0.58	0.66	0.74	0.82	0.51	0.59	0.67	0.75	0.36	0.44	0.51	0.58
		PI	1.91	1.91	1.91	1.91	1.92	1.92	1.92	1.92	1.92	1.92	1.92	1.92	1.93	1.93	1.93	1.93
	35	TC	6.06	6.06	6.11	6.17	6.43	6.43	6.43	6.43	6.63	6.63	6.74	6.63	7.17	7.17	7.17	7.17
		S/T	0.73	0.82	0.91	1.00	0.58	0.67	0.76	0.84	0.52	0.60	0.68	0.77	0.36	0.44	0.51	0.59
		PI	2.09	2.09	2.09	2.09	2.10	2.10	2.10	2.10	2.11	2.11	2.11	2.11	2.12	2.12	2.12	2.12
	40	TC	5.66	5.66	5.71	5.77	6.01	6.01	6.01	6.04	6.21	6.21	6.28	6.21	6.72	6.72	6.72	6.72
		S/T	0.75	0.85	0.95	1.00	0.59	0.69	0.78	0.88	0.52	0.61	0.70	0.79	0.35	0.44	0.52	0.61
		PI	2.31	2.31	2.31	2.31	2.32	2.32	2.32	2.32	2.33	2.33	2.33	2.33	2.34	2.34	2.34	2.34
	46	TC	5.24	5.24	5.29	5.35	5.58	5.58	5.58	5.64	5.78	5.78	5.78	5.78	6.23	6.23	6.23	6.23
		S/T	0.76	0.87	0.97	1.00	0.60	0.70	0.79	0.89	0.52	0.62	0.71	0.81	0.35	0.44	0.53	0.61
		PI	2.57	2.57	2.57	2.57	2.58	2.58	2.58	2.58	2.59	2.59	2.59	2.59	2.61	2.61	2.61	2.61
	50	TC	4.90	4.95	5.01	5.07	5.24	5.24	5.24	5.29	5.44	5.44	5.44	5.44	5.89	5.89	5.89	5.89
		S/T	0.78	0.89	0.99	1.00	0.61	0.71	0.82	0.92	0.53	0.63	0.73	0.83	0.35	0.44	0.53	0.62
		PI	2.79	2.79	2.79	2.79	2.80	2.80	2.80	2.80	2.81	2.81	2.81	2.81	2.83	2.83	2.83	2.83
1035	-15	TC	7.50	7.50	7.56	7.65	7.88	7.88	7.88	7.88	8.09	8.09	8.09	8.09	8.58	8.58	8.58	8.58
		S/T	0.71	0.81	0.98	1.00	0.57	0.66	0.74	0.83	0.50	0.59	0.68	0.76	0.34	0.42	0.50	0.58
		PI	1.49	1.49	1.49	1.49	1.49	1.49	1.49	1.49	1.49	1.49	1.49	1.49	1.48	1.48	1.48	1.48
	-10	TC	7.45	7.45	7.51	7.60	7.84	7.84	7.84	7.84	8.05	8.05	8.05	8.05	8.55	8.55	8.55	8.55
		S/T	0.72	0.82	0.99	1.00	0.57	0.66	0.75	0.83	0.50	0.59	0.68	0.77	0.34	0.43	0.50	0.58
		PI	1.49	1.49	1.49	1.49	1.48	1.48	1.48	1.48	1.48	1.48	1.48	1.48	1.48	1.48	1.48	1.48
	-5	TC	7.41	7.41	7.47	7.56	7.81	7.81	7.81	7.81	8.02	8.02	8.02	8.02	8.53	8.53	8.53	8.53
		S/T	0.72	0.82	0.99	1.00	0.58	0.66	0.75	0.84	0.51	0.59	0.68	0.77	0.34	0.43	0.51	0.59
		PI	1.48	1.48	1.48	1.48	1.48	1.48	1.48	1.48	1.48	1.48	1.48	1.48	1.49	1.49	1.49	1.49
	0	TC	7.37	7.37	7.43	7.52	7.78	7.78	7.78	7.78	7.99	7.99	7.99	7.99	8.52	8.52	8.52	8.52
		S/T	0.73	0.82	1.00	1.00	0.58	0.67	0.75	0.84	0.51	0.60	0.69	0.77	0.34	0.43	0.51	0.59
		PI	1.49	1.49	1.49	1.49	1.49	1.49	1.49	1.49	1.49	1.49	1.49	1.49	1.49	1.49	1.49	1.49
	5	TC	7.33	7.33	7.39	7.48	7.75	7.75	7.75	7.75	7.97	7.97	7.97	7.97	8.51	8.51	8.51	8.51
		S/T	0.73	0.83	1.00	1.00	0.58	0.67	0.76	0.85	0.51	0.60	0.69	0.78	0.34	0.43	0.51	0.59
		PI	1.50	1.50	1.50	1.50	1.50	1.50	1.50	1.50	1.50	1.50	1.50	1.50	1.50	1.50	1.50	1.50
	10	TC	7.29	7.29	7.35	7.44	7.71	7.71	7.71	7.71	7.93	7.93	7.93	7.93	8.49	8.49	8.49	8.49
		S/T	0.73	0.83	1.00	1.00	0.58	0.67	0.76	0.85	0.51	0.60	0.69	0.78	0.35	0.44	0.51	0.59
		PI	1.53	1.53	1.53	1.53	1.52	1.52	1.52	1.52	1.52	1.52	1.52	1.52	1.52	1.52	1.52	1.52
	15	TC	7.23	7.23	7.29	7.38	7.66	7.66	7.66	7.66	7.89	7.89	7.89	7.89	8.46	8.46	8.46	8.46
		S/T	0.74	0.84	0.93	1.00	0.59	0.68	0.77	0.86	0.52	0.61	0.70	0.79	0.35	0.44	0.52	0.60
		PI	1.57	1.57	1.57	1.57	1.56	1.56	1.56	1.56	1.56	1.56	1.56	1.56	1.55	1.55	1.55	1.55
	20	TC	7.15	7.15	7.21	7.29	7.58	7.58	7.58	7.58	7.81	7.81	7.81	7.81	8.38	8.38	8.38	8.38
		S/T	0.74	0.84	0.93	1.00	0.59	0.68	0.77	0.86	0.52	0.61	0.70	0.79	0.35	0.44	0.52	0.60
		PI	1.62	1.62	1.62	1.62	1.61	1.61	1.61	1.61	1.61	1.61	1.61	1.61	1.60	1.60	1.60	1.60
	25	TC	6.83	6.83	6.89	6.95	7.26	7.26	7.26	7.26	7.46	7.46	7.46	7.46	8.04	8.04	8.04	8.04
		S/T	0.75	0.86	0.95	1.00	0.59	0.69	0.79	0.88	0.52	0.61	0.71	0.80	0.35	0.44	0.52	0.61
		PI	1.79	1.79	1.79	1.79	1.78	1.78	1.78	1.78	1.78	1.78	1.78	1.78	1.79	1.79	1.79	1.79
	30	TC	6.52	6.52	6.57	6.63	6.92	6.92	6.92	6.98	7.12	7.12	7.12	7.12	7.69	7.69	7.69	7.69
		S/T	0.77	0.87	0.97	1.00	0.60	0.70	0.80	0.90	0.52	0.62	0.72	0.82	0.35	0.44	0.53	0.62
		PI	1.95	1.95	1.95	1.95	1.95	1.95	1.95	1.95	1.96	1.96	1.96	1.96	1.96	1.96	1.96	1.96
	35	TC	6.17	6.23	6.29	6.34	6.57	6.57	6.57	6.63	6.78	6.78	6.89	6.78	7.32	7.32	7.32	7.32
		S/T	0.78	0.89	1.00	1.00	0.61	0.71	0.82	0.92	0.53	0.63	0.73	0.84	0.34	0.44	0.53	0.63
		PI	2.13	2.13	2.13	2.13	2.14	2.14	2.14	2.14	2.15	2.15	2.15	2.15	2.15	2.15	2.15	2.15
	40	TC	5.83	5.89	5.95	6.00	6.21	6.21	6.21	6.26	6.41	6.41	6.47	6.43	6.93	6.93	6.93	6.93
		S/T	0.81	0.93	1.00	1.00	0.62	0.74	0.85	0.96	0.54	0.65	0.76	0.87	0.34	0.44	0.55	0.65
		PI	2.35	2.35	2.35	2.35	2.36	2.36	2.36	2.36	2.37	2.37	2.37	2.37	2.38	2.38	2.38	2.38
	46	TC	5.41	5.46	5.52	5.58	5.75	5.75	5.75	5.81	5.95	5.95	5.95	6.01	6.44	6.44	6.44	6.44
		S/T	0.82	0.95	1.00	1.00	0.63	0.75	0.87	0.99	0.54	0.66	0.77	0.89	0.34	0.44	0.55	0.66
		PI	2.62	2.62	2.62	2.62	2.63	2.63	2.63	2.63	2.64	2.64	2.64	2.64	2.66	2.66	2.66	2.66
	50	TC	5.06	5.12	5.18	5.23	5.41	5.41	5.46	5.52	5.61	5.61	5.61	5.67	6.07	6.07	6.07	6.07
		S/T	0.84	0.98	1.00	1.00	0.64	0.77	0.89	1.00	0.55	0.67	0.79	0.91	0.33	0.45	0.56	0.91
		PI	2.84	2.84	2.84	2.84	2.85	2.85	2.85	2.85	2.86	2.86	2.86	2.86	2.88	2.88	2.88	2.88

1229	-15	TC	7.68	7.77	7.86	7.95	8.06	8.06	8.06	8.15	8.26	8.26	8.26	8.26	8.79	8.79	8.79	8.79
		S/T	0.75	0.86	1.00	1.00	0.59	0.69	0.79	0.98	0.51	0.61	0.70	0.81	0.33	0.42	0.52	0.61
		PI	1.52	1.52	1.52	1.52	1.51	1.51	1.51	1.51	1.51	1.51	1.51	1.51	1.51	1.51	1.51	1.51
	-10	TC	7.63	7.72	7.81	7.90	8.02	8.02	8.02	8.10	8.22	8.22	8.22	8.22	8.76	8.76	8.76	8.76
		S/T	0.76	0.86	1.00	1.00	0.59	0.69	0.80	0.98	0.51	0.61	0.71	0.82	0.33	0.43	0.52	0.61
		PI	1.51	1.51	1.51	1.51	1.51	1.51	1.51	1.51	1.51	1.51	1.51	1.51	1.51	1.51	1.51	1.51
	-5	TC	7.59	7.68	7.77	7.85	7.99	7.99	7.99	8.07	8.19	8.19	8.19	8.19	8.73	8.73	8.73	8.73
		S/T	0.76	0.87	1.00	1.00	0.59	0.69	0.80	0.99	0.52	0.61	0.71	0.82	0.33	0.43	0.53	0.61
		PI	1.51	1.51	1.51	1.51	1.51	1.51	1.51	1.51	1.51	1.51	1.51	1.51	1.51	1.51	1.51	1.51
	0	TC	7.55	7.64	7.73	7.82	7.96	7.96	7.96	8.04	8.17	8.17	8.17	8.17	8.73	8.73	8.73	8.73
		S/T	0.76	0.87	1.00	1.00	0.60	0.70	0.80	0.99	0.52	0.62	0.72	0.82	0.33	0.43	0.53	0.62
		PI	1.52	1.52	1.52	1.52	1.51	1.51	1.51	1.51	1.52	1.52	1.52	1.52	1.52	1.52	1.52	1.52
	5	TC	7.51	7.60	7.69	7.78	7.93	7.93	7.93	8.01	8.14	8.14	8.14	8.14	8.72	8.72	8.72	8.72
		S/T	0.77	0.88	1.00	1.00	0.60	0.70	0.81	1.00	0.52	0.62	0.72	0.83	0.33	0.43	0.53	0.62
		PI	1.53	1.53	1.53	1.53	1.53	1.53	1.53	1.53	1.53	1.53	1.53	1.53	1.53	1.53	1.53	1.53
	10	TC	7.47	7.55	7.64	7.73	7.89	7.89	7.89	7.98	8.11	8.11	8.11	8.11	8.70	8.70	8.70	8.70
		S/T	0.77	0.88	1.00	1.00	0.60	0.70	0.81	1.00	0.52	0.62	0.72	0.83	0.34	0.44	0.53	0.62
		PI	1.56	1.56	1.56	1.56	1.55	1.55	1.55	1.55	1.55	1.55	1.55	1.55	1.55	1.55	1.55	1.55
	15	TC	7.40	7.49	7.58	7.67	7.83	7.83	7.83	7.92	8.06	8.06	8.06	8.06	8.66	8.66	8.66	8.66
		S/T	0.78	0.89	0.99	1.00	0.61	0.71	0.82	0.92	0.53	0.63	0.73	0.84	0.34	0.44	0.54	0.63
		PI	1.59	1.59	1.59	1.59	1.59	1.59	1.59	1.59	1.59	1.59	1.59	1.59	1.58	1.58	1.58	1.58
	20	TC	7.32	7.41	7.49	7.58	7.75	7.75	7.75	7.84	7.98	7.98	7.98	7.98	8.58	8.58	8.58	8.58
		S/T	0.78	0.89	0.99	1.00	0.61	0.71	0.82	0.92	0.53	0.63	0.73	0.84	0.34	0.44	0.54	0.63
		PI	1.65	1.65	1.65	1.65	1.64	1.64	1.64	1.64	1.64	1.64	1.64	1.64	1.63	1.63	1.63	1.63
	25	TC	6.98	7.03	7.09	7.15	7.41	7.41	7.41	7.49	7.64	7.64	7.64	7.64	8.21	8.21	8.21	8.21
		S/T	0.79	0.91	1.00	1.00	0.62	0.73	0.84	0.94	0.53	0.64	0.75	0.86	0.34	0.44	0.54	0.64
		PI	1.82	1.82	1.82	1.82	1.82	1.82	1.82	1.82	1.82	1.82	1.82	1.82	1.82	1.82	1.82	1.82
	30	TC	6.63	6.69	6.75	6.80	7.06	7.06	7.06	7.12	7.29	7.29	7.29	7.29	7.84	7.84	7.84	7.84
		S/T	0.81	0.93	1.00	1.00	0.62	0.74	0.86	0.97	0.54	0.65	0.76	0.88	0.34	0.44	0.55	0.65
		PI	1.98	1.98	1.98	1.98	1.99	1.99	1.99	1.99	1.99	1.99	1.99	1.99	2.00	2.00	2.00	2.00
	35	TC	6.32	6.37	6.43	6.49	6.72	6.72	6.72	6.78	6.92	6.92	**7.03**	7.09	7.46	7.46	7.46	7.46
		S/T	0.83	0.95	1.00	1.00	0.63	0.75	0.88	1.00	0.54	0.66	**0.77**	0.89	0.34	0.45	0.56	0.67
		PI	2.17	2.17	2.17	2.17	2.18	2.18	2.18	2.18	2.19	2.19	**2.19**	2.19	2.20	2.20	2.20	2.20
	40	TC	5.96	6.02	6.08	6.13	6.35	6.35	6.38	6.43	6.54	6.54	6.60	6.66	7.07	7.07	7.07	7.07
		S/T	0.86	1.00	1.00	1.00	0.65	0.78	0.92	1.00	0.55	0.68	0.81	0.94	0.33	0.45	0.57	0.90
		PI	2.40	2.40	2.40	2.40	2.41	2.41	2.41	2.41	2.42	2.42	2.42	2.42	2.43	2.43	2.43	2.43
	46	TC	5.52	5.58	5.64	5.69	5.90	5.90	5.95	6.01	6.07	6.07	6.07	6.13	6.59	6.59	6.59	6.59
		S/T	0.88	1.00	1.00	1.00	0.66	0.80	0.93	1.00	0.56	0.69	0.83	0.96	0.33	0.45	0.58	0.92
		PI	2.67	2.67	2.67	2.67	2.68	2.68	2.68	2.68	2.69	2.69	2.69	2.69	2.71	2.71	2.71	2.71
	50	TC	5.18	5.23	5.29	5.35	5.52	5.52	5.58	5.64	5.72	5.72	5.72	5.78	6.18	6.18	6.18	6.18
		S/T	0.90	1.00	1.00	1.00	0.67	0.82	0.97	1.00	0.57	0.71	0.85	0.99	0.32	0.46	0.59	0.97
		PI	2.89	2.89	2.89	2.89	2.91	2.91	2.91	2.91	2.91	2.91	2.91	2.91	2.94	2.94	2.94	2.94

TC:Total Cooling Capacity (kW)

S/T:Sensible Cooling Capacity Ratio

PI:Power Input(kW)

Note: The table shows the case where the operation frequency of a compressor is fixed.

30k																		
INDOOR AIRFLOW (CMH)	OUTDOOR DB(℃)	ID WB (℃)	16.0				18.0				19.0				22.0			
		ID DB (℃)	23.0	25.0	27.0	29.0	23.0	25.0	27.0	29.0	23.0	25.0	27.0	29.0	23.0	25.0	27.0	29.0
1500	-15	TC	9.20	9.31	9.40	9.49	9.68	9.89	9.98	10.07	9.90	9.90	9.90	9.90	10.52	10.52	10.52	10.52
		S/T	0.76	0.87	0.97	0.97	0.59	0.69	0.80	0.90	0.51	0.61	0.71	0.82	0.33	0.42	0.52	0.62
		PI	1.67	1.66	1.66	1.67	1.66	1.66	1.66	1.66	1.66	1.66	1.66	1.66	1.65	1.65	1.65	1.65
	-10	TC	9.15	9.25	9.34	9.43	9.62	9.83	9.92	10.01	9.85	9.85	9.85	9.85	10.49	10.49	10.49	10.49
		S/T	0.77	0.87	0.97	0.97	0.59	0.70	0.81	0.90	0.51	0.61	0.72	0.82	0.33	0.43	0.52	0.62
		PI	1.66	1.65	1.65	1.66	1.66	1.66	1.66	1.66	1.65	1.65	1.65	1.65	1.65	1.65	1.65	1.65
	-5	TC	9.09	9.20	9.29	9.38	9.59	9.80	9.89	9.98	9.82	9.82	9.82	9.82	10.46	10.46	10.46	10.46
		S/T	0.77	0.88	0.98	0.98	0.59	0.70	0.81	0.91	0.52	0.61	0.72	0.83	0.33	0.43	0.53	0.62
		PI	1.65	1.65	1.65	1.65	1.66	1.66	1.66	1.66	1.65	1.65	1.65	1.65	1.66	1.66	1.66	1.66
	0	TC	9.05	9.15	9.24	9.33	9.55	9.76	9.85	9.94	9.79	9.79	9.79	9.79	10.45	10.45	10.45	10.45
		S/T	0.77	0.88	0.98	0.98	0.60	0.70	0.81	0.91	0.52	0.62	0.73	0.83	0.33	0.43	0.53	0.63
		PI	1.66	1.66	1.66	1.66	1.66	1.66	1.66	1.66	1.66	1.66	1.66	1.66	1.66	1.66	1.66	1.66
	5	TC	9.00	9.11	9.19	9.28	9.51	9.72	9.81	9.90	9.76	9.76	9.76	9.76	10.44	10.44	10.44	10.44
		S/T	0.78	0.89	0.99	0.99	0.60	0.71	0.82	0.92	0.52	0.62	0.73	0.84	0.33	0.43	0.53	0.63
		PI	1.68	1.67	1.67	1.68	1.68	1.68	1.68	1.68	1.67	1.67	1.67	1.67	1.67	1.67	1.67	1.67
	10	TC	8.95	9.05	9.14	9.23	9.47	9.68	9.77	9.85	9.72	9.72	9.72	9.72	10.42	10.42	10.42	10.42
		S/T	0.78	0.89	0.99	0.99	0.60	0.71	0.82	0.92	0.52	0.62	0.73	0.84	0.34	0.44	0.53	0.63
		PI	1.70	1.70	1.70	1.70	1.70	1.70	1.70	1.70	1.70	1.70	1.70	1.70	1.70	1.70	1.70	1.70
	15	TC	8.87	8.98	9.06	9.15	9.41	9.61	9.70	9.79	9.66	9.66	9.66	9.66	10.37	10.37	10.37	10.37
		S/T	0.79	0.90	1.00	1.00	0.61	0.72	0.83	0.93	0.53	0.63	0.74	0.85	0.34	0.44	0.54	0.64
		PI	1.75	1.74	1.74	1.75	1.74	1.74	1.74	1.74	1.74	1.74	1.74	1.74	1.73	1.73	1.73	1.73
	20	TC	8.77	8.88	8.96	9.05	9.31	9.31	9.31	9.39	9.56	9.56	9.56	9.56	10.28	10.28	10.28	10.28
		S/T	0.79	0.90	1.00	1.00	0.61	0.72	0.83	0.93	0.53	0.63	0.74	0.85	0.34	0.44	0.54	0.64
		PI	1.81	1.80	1.80	1.81	1.80	1.80	1.80	1.80	1.79	1.79	1.79	1.79	1.78	1.78	1.78	1.78
	25	TC	8.36	8.44	8.53	8.62	8.90	8.90	8.90	8.99	9.16	9.16	9.16	9.16	9.85	9.85	9.85	9.85
		S/T	0.80	0.92	1.00	1.00	0.62	0.73	0.84	0.95	0.53	0.64	0.75	0.86	0.34	0.44	0.54	0.65
		PI	1.99	1.99	1.99	1.99	1.99	1.99	1.99	1.99	1.99	1.99	1.99	1.99	1.99	1.99	1.99	1.99
	30	TC	7.98	8.07	8.16	8.24	8.47	8.47	8.47	8.56	8.73	8.73	8.73	8.73	9.42	9.42	9.42	9.42
		S/T	0.81	0.94	1.00	1.00	0.63	0.74	0.86	0.98	0.54	0.65	0.77	0.88	0.34	0.44	0.55	0.66
		PI	2.18	2.18	2.18	2.18	2.19	2.19	2.19	2.19	2.19	2.19	2.19	2.19	2.20	2.20	2.20	2.20
	35	TC	7.58	7.67	7.75	7.84	8.07	8.07	8.07	8.16	8.33	8.33	8.44	8.53	8.96	8.96	8.96	8.96
		S/T	0.83	0.96	1.00	1.00	0.63	0.76	0.88	1.00	0.54	0.66	0.78	0.89	0.33	0.45	0.56	0.67
		PI	2.38	2.38	2.38	2.38	2.39	2.39	2.39	2.39	2.40	2.40	2.40	2.40	2.41	2.41	2.41	2.41
	40	TC	7.04	7.11	7.18	7.25	7.51	7.51	7.53	7.60	7.73	7.73	7.80	7.88	8.34	8.34	8.34	8.34
		S/T	0.87	1.00	1.00	1.00	0.65	0.79	0.92	1.00	0.55	0.69	0.82	0.95	0.33	0.45	0.57	0.70
		PI	2.63	2.63	2.63	2.63	2.64	2.64	2.64	2.64	2.65	2.65	2.65	2.65	2.67	2.67	2.67	2.67
	46	TC	6.51	6.57	6.63	6.68	6.96	6.96	7.02	7.08	7.16	7.16	7.16	7.25	7.76	7.76	7.76	7.76
		S/T	0.88	1.00	1.00	1.00	0.66	0.80	0.94	1.00	0.56	0.70	0.84	0.97	0.33	0.45	0.58	0.71
		PI	2.93	2.93	2.93	2.93	2.94	2.94	2.94	2.94	2.95	2.95	2.95	2.95	2.97	2.97	2.97	2.97
	50	TC	6.12	6.17	6.23	6.29	6.54	6.54	6.60	6.65	6.74	6.74	6.74	6.80	7.30	7.30	7.30	7.30
		S/T	0.91	1.00	1.00	1.00	0.68	0.83	0.98	1.00	0.57	0.72	0.86	1.00	0.32	0.46	0.59	0.73
		PI	3.17	3.17	3.17	3.17	3.19	3.19	3.19	3.19	3.20	3.20	3.20	3.20	3.22	3.22	3.22	3.22
1800	-15	TC	9.40	9.49	9.58	9.67	9.89	9.89	9.98	10.07	10.12	10.12	10.12	10.20	10.76	10.76	10.76	10.76
		S/T	0.81	0.94	0.98	1.00	0.62	0.73	0.86	0.97	0.53	0.65	0.76	0.88	0.32	0.43	0.54	0.66
		PI	1.70	1.70	1.70	1.70	1.69	1.69	1.69	1.69	1.69	1.69	1.69	1.69	1.69	1.69	1.69	1.69
	-10	TC	9.35	9.44	9.53	9.62	9.83	9.83	9.92	10.01	10.06	10.06	10.06	10.15	10.73	10.73	10.73	10.73
		S/T	0.82	0.94	0.99	1.00	0.62	0.74	0.86	0.97	0.53	0.65	0.77	0.88	0.32	0.44	0.54	0.66
		PI	1.69	1.69	1.69	1.69	1.69	1.69	1.69	1.69	1.69	1.69	1.69	1.69	1.69	1.69	1.69	1.69
	-5	TC	9.29	9.38	9.47	9.56	9.80	9.80	9.89	9.98	10.03	10.03	10.03	10.12	10.70	10.70	10.70	10.70
		S/T	0.82	0.95	0.99	1.00	0.62	0.74	0.87	0.98	0.54	0.65	0.77	0.89	0.32	0.44	0.55	0.66
		PI	1.69	1.69	1.69	1.69	1.68	1.68	1.68	1.68	1.69	1.69	1.69	1.69	1.69	1.69	1.69	1.69
	0	TC	9.24	9.33	9.42	9.51	9.76	9.76	9.85	9.94	10.00	10.00	10.00	10.09	10.69	10.69	10.69	10.69
		S/T	0.82	0.95	1.00	1.00	0.63	0.74	0.87	0.98	0.54	0.66	0.77	0.89	0.32	0.44	0.55	0.67
		PI	1.69	1.69	1.69	1.69	1.69	1.69	1.69	1.69	1.70	1.70	1.70	1.70	1.70	1.70	1.70	1.70
	5	TC	9.20	9.29	9.37	9.46	9.72	9.72	9.81	9.90	9.97	9.97	9.97	10.06	10.68	10.68	10.68	10.68
		S/T	0.83	0.96	1.00	1.00	0.63	0.75	0.88	0.99	0.54	0.66	0.78	0.90	0.33	0.44	0.55	0.67
		PI	1.71	1.71	1.71	1.71	1.71	1.71	1.71	1.71	1.71	1.71	1.71	1.71	1.71	1.71	1.71	1.71
	10	TC	9.14	9.23	9.32	9.41	9.68	9.68	9.77	9.85	9.93	9.93	9.93	10.01	10.65	10.65	10.65	10.65
		S/T	0.83	0.96	1.00	1.00	0.63	0.75	0.88	0.99	0.54	0.66	0.78	0.90	0.33	0.45	0.55	0.67
		PI	1.74	1.74	1.74	1.74	1.73	1.73	1.73	1.73	1.74	1.74	1.74	1.74	1.73	1.73	1.73	1.73
	15	TC	9.07	9.15	9.24	9.33	9.61	9.61	9.70	9.79	9.87	9.87	9.87	9.95	10.61	10.61	10.61	10.61
		S/T	0.84	0.97	1.00	1.00	0.64	0.76	0.89	1.00	0.55	0.67	0.79	0.91	0.33	0.45	0.56	0.68
		PI	1.78	1.78	1.78	1.78	1.77	1.77	1.77	1.77	1.77	1.77	1.77	1.77	1.77	1.77	1.77	1.77
	20	TC	8.96	9.05	9.14	9.22	9.51	9.51	9.60	9.68	9.77	9.77	9.77	9.86	10.52	10.52	10.52	10.52
		S/T	0.84	0.97	1.00	1.00	0.64	0.76	0.89	1.00	0.55	0.67	0.79	0.91	0.33	0.45	0.56	0.68
		PI	1.84	1.84	1.84	1.84	1.83	1.83	1.83	1.83	1.83	1.83	1.83	1.83	1.82	1.82	1.82	1.82
	25	TC	8.53	8.62	8.71	8.79	9.08	9.08	9.17	9.25	9.34	9.34	9.34	9.42	10.06	10.06	10.06	10.06
		S/T	0.86	0.99	1.00	1.00	0.65	0.78	0.91	1.00	0.55	0.68	0.81	0.93	0.33	0.45	0.57	0.69
		PI	2.03	2.03	2.03	2.03	2.03	2.03	2.03	2.03	2.03	2.03	2.03	2.03	2.03	2.03	2.03	2.03
	30	TC	8.13	8.22	8.30	8.39	8.65	8.65	8.74	8.82	8.91	8.91	8.91	8.99	9.63	9.63	9.63	9.63
		S/T	0.87	1.00	1.00	1.00	0.66	0.80	0.93	1.00	0.56	0.69	0.83	0.96	0.33	0.45	0.58	0.70
		PI	2.23	2.23	2.23	2.23	2.23	2.23	2.23	2.23	2.24	2.24	2.24	2.24	2.25	2.25	2.25	2.25
	35	TC	7.73	7.82	7.90	7.99	8.25	8.25	8.33	8.42	8.48	8.48	8.62	8.71	9.17	9.17	9.17	9.17
		S/T	0.90	1.00	1.00	1.00	0.67	0.81	0.96	1.00	0.56	0.71	0.84	0.98	0.32	0.46	0.59	0.72
		PI	2.43	2.43	2.43	2.43	2.44	2.44	2.44	2.44	2.45	2.45	2.45	2.45	2.45	2.45	2.45	2.45
	40	TC	7.29	7.37	7.44	7.51	7.79	7.79	7.87	7.96	8.02	8.02	8.13	8.22	8.67	8.67	8.67	8.67
		S/T	0.94	1.00	1.00	1.00	0.69	0.85	1.00	1.00	0.58	0.73	0.89	1.00	0.32	0.46	0.61	0.75
		PI	2.69	2.69	2.69	2.69	2.70	2.70	2.70	2.70	2.71	2.71	2.71	2.71	2.72	2.72	2.72	2.72
	46	TC	6.76	6.82	6.87	6.93	7.22	7.22	7.31	7.39	7.45	7.45	7.54	7.62	8.05	8.05	8.05	8.05
		S/T	0.96	1.00	1.00	1.00	0.70	0.87	1.00	1.00	0.58	0.75	0.90	1.00	0.32	0.47	0.62	0.77
		PI	2.99	2.99	2.99	2.99	3.00	3.00	3.00	3.00	3.01	3.01	3.01	3.01	3.03	3.03	3.03	3.03
	50	TC	6.33	6.39	6.44	6.50	6.76	6.82	6.87	6.93	6.99	6.99	7.05	7.11	7.59	7.59	7.59	7.59
		S/T	0.99	1.00	1.00	1.00	0.72	0.90	1.00	1.00	0.60	0.77	0.94	1.00	0.31	0.47	0.63	0.91
		PI	3.24	3.24	3.24	3.24	3.25	3.25	3.25	3.25	3.26	3.26	3.26	3.26	3.29	3.29	3.29	3.29

2100	-15	TC	9.58	9.67	9.76	9.85	10.07	10.07	10.16	10.25	10.32	10.32	10.32	10.41	10.97	10.97	10.97	10.97
		S/T	0.86	0.97	1.00	1.00	0.65	0.78	0.92	0.98	0.54	0.68	0.82	0.95	0.31	0.44	0.57	0.70
		PI	1.73	1.73	1.73	1.73	1.73	1.73	1.73	1.73	1.73	1.73	1.73	1.73	1.72	1.72	1.72	1.72
	-10	TC	9.53	9.62	9.71	9.80	10.01	10.01	10.10	10.19	10.27	10.27	10.27	10.36	10.93	10.93	10.93	10.93
		S/T	0.86	0.97	1.00	1.00	0.65	0.79	0.92	0.98	0.54	0.68	0.82	0.95	0.31	0.45	0.57	0.70
		PI	1.73	1.73	1.73	1.73	1.72	1.72	1.72	1.72	1.73	1.73	1.73	1.73	1.73	1.73	1.73	1.73
	-5	TC	9.47	9.56	9.65	9.74	9.98	9.98	10.06	10.15	10.23	10.23	10.23	10.32	10.90	10.90	10.90	10.90
		S/T	0.87	0.98	1.00	1.00	0.65	0.79	0.93	0.99	0.55	0.68	0.83	0.96	0.31	0.45	0.58	0.70
		PI	1.72	1.72	1.72	1.72	1.72	1.72	1.72	1.72	1.73	1.73	1.73	1.73	1.73	1.73	1.73	1.73
	0	TC	9.42	9.51	9.60	9.69	9.94	9.94	10.03	10.11	10.21	10.21	10.21	10.29	10.89	10.89	10.89	10.89
		S/T	0.87	0.98	1.00	1.00	0.66	0.79	0.93	0.99	0.55	0.69	0.83	0.96	0.31	0.45	0.58	0.71
		PI	1.73	1.73	1.73	1.73	1.73	1.73	1.73	1.73	1.73	1.73	1.73	1.73	1.74	1.74	1.74	1.74
	5	TC	9.37	9.46	9.55	9.64	9.90	9.90	9.99	10.08	10.17	10.17	10.17	10.26	10.88	10.88	10.88	10.88
		S/T	0.88	0.99	1.00	1.00	0.66	0.80	0.94	1.00	0.55	0.69	0.84	0.97	0.32	0.45	0.58	0.71
		PI	1.75	1.75	1.75	1.75	1.74	1.74	1.74	1.74	1.75	1.75	1.75	1.75	1.75	1.75	1.75	1.75
	10	TC	9.32	9.41	9.49	9.58	9.85	9.85	9.94	10.03	10.13	10.13	10.13	10.22	10.86	10.86	10.86	10.86
		S/T	0.88	0.99	1.00	1.00	0.66	0.80	0.94	1.00	0.55	0.69	0.84	0.97	0.32	0.46	0.58	0.71
		PI	1.78	1.78	1.78	1.78	1.77	1.77	1.77	1.77	1.77	1.77	1.77	1.77	1.77	1.77	1.77	1.77
	15	TC	9.24	9.33	9.42	9.50	9.79	9.79	9.87	9.96	10.07	10.07	10.07	10.16	10.81	10.81	10.81	10.81
		S/T	0.89	1.00	1.00	1.00	0.67	0.81	0.95	1.00	0.56	0.70	0.85	0.98	0.32	0.46	0.59	0.72
		PI	1.82	1.82	1.82	1.82	1.81	1.81	1.81	1.81	1.81	1.81	1.81	1.81	1.81	1.81	1.81	1.81
	20	TC	9.14	9.22	9.31	9.40	9.68	9.68	9.77	9.86	9.97	9.97	9.97	10.06	10.72	10.72	10.72	10.72
		S/T	0.89	1.00	1.00	1.00	0.67	0.81	0.95	1.00	0.56	0.70	0.85	0.98	0.32	0.46	0.59	0.72
		PI	1.88	1.88	1.88	1.88	1.87	1.87	1.87	1.87	1.87	1.87	1.87	1.87	1.86	1.86	1.86	1.86
	25	TC	8.71	8.79	8.88	8.96	9.25	9.25	9.34	9.42	9.54	9.54	9.54	9.63	10.26	10.26	10.26	10.26
		S/T	0.91	1.00	1.00	1.00	0.68	0.83	0.98	1.00	0.57	0.72	0.86	1.00	0.32	0.46	0.60	0.73
		PI	2.07	2.07	2.07	2.07	2.07	2.07	2.07	2.07	2.07	2.07	2.07	2.07	2.07	2.07	2.07	2.07
	30	TC	8.30	8.39	8.48	8.56	8.82	8.82	8.91	8.99	9.11	9.11	9.19	9.28	9.80	9.80	9.80	9.80
		S/T	0.93	1.00	1.00	1.00	0.69	0.85	1.00	1.00	0.58	0.73	0.88	1.00	0.32	0.46	0.61	0.75
		PI	2.27	2.27	2.27	2.27	2.27	2.27	2.27	2.27	2.27	2.27	2.27	2.27	2.28	2.28	2.28	2.28
	35	TC	7.90	7.99	8.07	8.16	8.39	8.39	8.48	8.56	8.65	8.65	**8.79**	8.88	9.34	9.34	9.34	9.34
		S/T	0.96	1.00	1.00	1.00	0.70	0.87	1.00	1.00	0.58	0.75	**0.90**	1.00	0.32	0.47	0.62	0.77
		PI	2.48	2.48	2.48	2.48	2.49	2.49	2.49	2.49	2.50	2.50	**2.50**	2.50	2.51	2.51	2.51	2.51
	40	TC	7.44	7.51	7.59	7.66	7.93	7.97	8.05	8.14	8.17	8.17	8.29	8.38	8.84	8.84	8.84	8.84
		S/T	1.00	1.00	1.00	1.00	0.73	0.91	1.00	1.00	0.60	0.78	0.95	1.00	0.31	0.48	0.64	0.90
		PI	2.74	2.74	2.74	2.74	2.75	2.75	2.75	2.75	2.76	2.76	2.76	2.76	2.78	2.78	2.78	2.78
	46	TC	6.87	6.93	6.99	7.05	7.36	7.45	7.54	7.62	7.59	7.59	7.68	7.77	8.23	8.23	8.23	8.23
		S/T	1.00	1.00	1.00	1.00	0.74	0.93	1.00	1.00	0.61	0.80	0.98	1.00	0.31	0.48	0.65	0.92
		PI	3.05	3.05	3.05	3.05	3.06	3.06	3.06	3.06	3.07	3.07	3.07	3.07	3.10	3.10	3.10	3.10
	50	TC	6.47	6.53	6.59	6.64	6.90	6.96	7.02	7.08	7.13	7.13	7.19	7.28	7.74	7.74	7.74	7.74
		S/T	1.00	1.00	1.00	1.00	0.76	0.96	1.00	1.00	0.62	0.82	1.00	1.00	0.30	0.49	0.67	0.97
		PI	3.31	3.31	3.31	3.31	3.32	3.32	3.32	3.32	3.33	3.33	3.33	3.33	3.35	3.35	3.35	3.35

TC:Total Cooling Capacity (kW)

S/T:Sensible Cooling Capacity Ratio

PI:Power Input(kW)

Note: The table shows the case where the operation frequency of a compressor is fixed.

36k+MOD30U-36HFN8-QRD0W(GA)																		
INDOOR AIRFLOW (CMH)	OUTDOOR DB(℃)	ID WB (℃)	16.0				18.0				19.0				22.0			
		ID DB (℃)	23.0	25.0	27.0	29.0	23.0	25.0	27.0	29.0	23.0	25.0	27.0	29.0	23.0	25.0	27.0	29.0
1500	-15	TC	11.05	11.06	11.18	11.30	11.63	11.87	11.87	11.99	11.90	11.90	11.90	11.90	12.65	12.65	12.65	12.65
		S/T	0.71	0.81	0.90	0.97	0.57	0.65	0.74	0.83	0.50	0.59	0.67	0.75	0.35	0.42	0.50	0.58
		PI	2.63	2.63	2.63	2.63	2.62	2.62	2.62	2.62	2.61	2.61	2.61	2.61	2.61	2.61	2.61	2.61
	-10	TC	10.99	11.00	11.11	11.23	11.56	11.80	11.80	11.92	11.84	11.84	11.84	11.84	12.60	12.60	12.60	12.60
		S/T	0.72	0.82	0.90	0.97	0.57	0.66	0.75	0.83	0.50	0.59	0.67	0.76	0.35	0.43	0.50	0.58
		PI	2.62	2.61	2.61	2.62	2.61	2.61	2.61	2.61	2.61	2.61	2.61	2.61	2.62	2.62	2.62	2.62
	-5	TC	10.92	10.93	11.05	11.17	11.52	11.76	11.76	11.88	11.80	11.80	11.80	11.80	12.57	12.57	12.57	12.57
		S/T	0.72	0.82	0.91	0.98	0.58	0.66	0.75	0.84	0.51	0.59	0.67	0.76	0.35	0.43	0.51	0.59
		PI	2.61	2.61	2.61	2.61	2.61	2.61	2.61	2.61	2.61	2.61	2.61	2.61	2.62	2.62	2.62	2.62
	0	TC	10.87	10.87	10.99	11.11	11.47	11.71	11.71	11.83	11.77	11.77	11.77	11.77	12.56	12.56	12.56	12.56
		S/T	0.73	0.82	0.91	0.98	0.58	0.66	0.75	0.84	0.51	0.60	0.68	0.76	0.35	0.43	0.51	0.59
		PI	2.62	2.62	2.62	2.62	2.62	2.62	2.62	2.62	2.62	2.62	2.62	2.62	2.63	2.63	2.63	2.63
	5	TC	10.81	10.82	10.94	11.06	11.43	11.67	11.67	11.79	11.73	11.73	11.73	11.73	12.55	12.55	12.55	12.55
		S/T	0.73	0.83	0.92	0.99	0.58	0.67	0.76	0.85	0.51	0.60	0.68	0.77	0.35	0.43	0.51	0.59
		PI	2.65	2.64	2.64	2.65	2.64	2.64	2.64	2.64	2.64	2.64	2.64	2.64	2.65	2.65	2.65	2.65
	10	TC	10.75	10.75	10.87	10.99	11.38	11.61	11.61	11.73	11.68	11.68	11.68	11.68	12.52	12.52	12.52	12.52
		S/T	0.73	0.83	0.92	0.99	0.58	0.67	0.76	0.85	0.51	0.60	0.68	0.77	0.36	0.44	0.51	0.59
		PI	2.69	2.69	2.69	2.69	2.68	2.68	2.68	2.68	2.68	2.68	2.68	2.68	2.68	2.68	2.68	2.68
	15	TC	10.66	10.67	10.78	10.90	11.30	11.54	11.54	11.65	11.61	11.61	11.61	11.61	12.46	12.46	12.46	12.46
		S/T	0.74	0.84	0.93	1.00	0.59	0.67	0.77	0.86	0.52	0.61	0.69	0.78	0.36	0.44	0.52	0.60
		PI	2.76	2.75	2.75	2.76	2.75	2.75	2.75	2.75	2.74	2.74	2.74	2.74	2.74	2.74	2.74	2.74
	20	TC	10.54	10.55	10.66	10.78	11.18	11.18	11.18	11.18	11.50	11.50	11.50	11.50	12.36	12.36	12.36	12.36
		S/T	0.74	0.84	0.93	1.00	0.59	0.68	0.77	0.86	0.52	0.61	0.69	0.78	0.36	0.44	0.52	0.60
		PI	2.85	2.85	2.85	2.85	2.84	2.84	2.84	2.84	2.83	2.83	2.83	2.83	2.82	2.82	2.82	2.82
	25	TC	10.06	10.06	10.17	10.29	10.69	10.69	10.69	10.69	11.01	11.01	11.01	11.01	11.84	11.84	11.84	11.84
		S/T	0.75	0.85	0.95	1.00	0.59	0.69	0.78	0.88	0.52	0.61	0.70	0.79	0.35	0.44	0.52	0.61
		PI	3.14	3.14	3.14	3.14	3.14	3.14	3.14	3.14	3.14	3.14	3.14	3.14	3.14	3.14	3.14	3.14
	30	TC	9.57	9.57	9.66	9.74	10.20	10.20	10.20	10.32	10.49	10.49	10.49	10.49	11.32	11.32	11.32	11.32
		S/T	0.76	0.87	0.97	1.00	0.60	0.70	0.80	0.89	0.52	0.62	0.71	0.81	0.35	0.44	0.53	0.62
		PI	3.44	3.44	3.44	3.44	3.45	3.45	3.45	3.45	3.46	3.46	3.46	3.46	3.47	3.47	3.47	3.47
	35	TC	9.11	9.20	9.28	9.37	9.68	9.68	9.68	9.77	10.00	10.00	10.14	10.00	10.78	10.78	10.78	10.78
		S/T	0.78	0.88	0.99	1.00	0.61	0.71	0.81	0.91	0.53	0.63	0.72	0.83	0.35	0.44	0.53	0.63
		PI	3.76	3.76	3.76	3.76	3.78	3.78	3.78	3.78	3.78	3.78	3.79	3.78	3.81	3.81	3.81	3.81
	40	TC	8.49	8.58	8.66	8.75	9.05	9.05	9.05	9.13	9.34	9.34	9.41	9.34	10.08	10.08	10.08	10.08
		S/T	0.80	0.92	1.00	1.00	0.62	0.73	0.85	0.96	0.53	0.64	0.76	0.87	0.34	0.44	0.54	0.65
		PI	4.15	4.15	4.15	4.15	4.17	4.17	4.17	4.17	4.18	4.18	4.18	4.18	4.21	4.21	4.21	4.21
	46	TC	7.86	7.94	8.03	8.11	8.40	8.40	8.40	8.48	8.65	8.65	8.65	8.65	9.37	9.37	9.37	9.37
		S/T	0.82	0.94	1.00	1.00	0.63	0.74	0.86	0.98	0.54	0.65	0.77	0.88	0.34	0.44	0.55	0.66
		PI	4.62	4.62	4.62	4.62	4.64	4.64	4.64	4.64	4.65	4.65	4.65	4.65	4.69	4.69	4.69	4.69
	50	TC	7.37	7.46	7.54	7.63	7.88	7.88	7.97	8.06	8.14	8.14	8.14	8.23	8.82	8.82	8.82	8.82
		S/T	0.84	0.97	1.00	1.00	0.64	0.76	0.89	1.00	0.54	0.67	0.79	0.91	0.33	0.45	0.56	0.67
		PI	5.00	5.00	5.00	5.00	5.02	5.02	5.02	5.02	5.03	5.03	5.03	5.03	5.07	5.07	5.07	5.07
1800	-15	TC	11.28	11.40	11.52	11.64	11.87	11.87	11.87	11.99	12.15	12.15	12.15	12.15	12.92	12.92	12.92	12.92
		S/T	0.75	0.86	0.98	1.00	0.59	0.69	0.79	0.89	0.51	0.61	0.70	0.81	0.33	0.42	0.52	0.61
		PI	2.68	2.68	2.68	2.68	2.68	2.68	2.68	2.68	2.67	2.67	2.67	2.67	2.67	2.67	2.67	2.67
	-10	TC	11.21	11.33	11.45	11.57	11.80	11.80	11.80	11.92	12.08	12.08	12.08	12.08	12.87	12.87	12.87	12.87
		S/T	0.76	0.86	0.99	1.00	0.59	0.69	0.80	0.89	0.51	0.61	0.71	0.82	0.33	0.43	0.52	0.61
		PI	2.67	2.67	2.67	2.67	2.67	2.67	2.67	2.67	2.67	2.67	2.67	2.67	2.67	2.67	2.67	2.67
	-5	TC	11.14	11.26	11.38	11.50	11.76	11.76	11.76	11.88	12.04	12.04	12.04	12.04	12.84	12.84	12.84	12.84
		S/T	0.76	0.87	0.99	1.00	0.59	0.69	0.80	0.90	0.52	0.61	0.71	0.82	0.33	0.43	0.53	0.61
		PI	2.67	2.67	2.67	2.67	2.67	2.67	2.67	2.67	2.67	2.67	2.67	2.67	2.67	2.67	2.67	2.67
	0	TC	11.09	11.21	11.32	11.44	11.71	11.71	11.71	11.83	12.01	12.01	12.01	12.01	12.83	12.83	12.83	12.83
		S/T	0.76	0.87	1.00	1.00	0.60	0.70	0.80	0.90	0.52	0.62	0.72	0.82	0.33	0.43	0.53	0.62
		PI	2.68	2.68	2.68	2.68	2.68	2.68	2.68	2.68	2.68	2.68	2.68	2.68	2.68	2.68	2.68	2.68
	5	TC	11.03	11.15	11.27	11.38	11.67	11.67	11.67	11.79	11.97	11.97	11.97	11.97	12.82	12.82	12.82	12.82
		S/T	0.77	0.88	1.00	1.00	0.60	0.70	0.81	0.91	0.52	0.62	0.72	0.83	0.33	0.43	0.53	0.62
		PI	2.70	2.70	2.70	2.70	2.70	2.70	2.70	2.70	2.70	2.70	2.70	2.70	2.70	2.70	2.70	2.70
	10	TC	10.96	11.08	11.20	11.32	11.61	11.61	11.61	11.73	11.92	11.92	11.92	11.92	12.78	12.78	12.78	12.78
		S/T	0.77	0.88	1.00	1.00	0.60	0.70	0.81	0.91	0.52	0.62	0.72	0.83	0.34	0.44	0.53	0.62
		PI	2.75	2.75	2.75	2.75	2.74	2.74	2.74	2.74	2.74	2.74	2.74	2.74	2.74	2.74	2.74	2.74
	15	TC	10.87	10.99	11.11	11.22	11.54	11.54	11.54	11.65	11.85	11.85	11.85	11.85	12.73	12.73	12.73	12.73
		S/T	0.78	0.89	0.99	1.00	0.61	0.71	0.82	0.92	0.53	0.63	0.73	0.84	0.34	0.44	0.54	0.63
		PI	2.81	2.81	2.81	2.81	2.81	2.81	2.81	2.81	2.80	2.80	2.80	2.80	2.80	2.80	2.80	2.80
	20	TC	10.75	10.87	10.98	11.10	11.41	11.41	11.41	11.53	11.73	11.73	11.73	11.73	12.62	12.62	12.62	12.62
		S/T	0.78	0.89	0.99	1.00	0.61	0.71	0.82	0.92	0.53	0.63	0.73	0.84	0.34	0.44	0.54	0.63
		PI	2.91	2.91	2.91	2.91	2.90	2.90	2.90	2.90	2.89	2.89	2.89	2.89	2.88	2.88	2.88	2.88
	25	TC	10.26	10.38	10.49	10.61	10.90	10.90	10.90	11.01	11.21	11.21	11.21	11.21	12.07	12.07	12.07	12.07
		S/T	0.79	0.91	1.00	1.00	0.61	0.73	0.84	0.94	0.53	0.64	0.75	0.86	0.34	0.44	0.54	0.64
		PI	3.21	3.21	3.21	3.21	3.21	3.21	3.21	3.21	3.21	3.21	3.21	3.21	3.21	3.21	3.21	3.21
	30	TC	9.77	9.86	9.95	10.03	10.41	10.41	10.41	10.52	10.72	10.72	10.72	10.72	11.53	11.53	11.53	11.53
		S/T	0.81	0.93	1.00	1.00	0.62	0.74	0.85	0.97	0.54	0.65	0.76	0.87	0.34	0.44	0.55	0.65
		PI	3.52	3.52	3.52	3.52	3.52	3.52	3.52	3.52	3.53	3.53	3.53	3.53	3.54	3.54	3.54	3.54
	35	TC	9.29	9.37	9.46	9.54	9.89	9.89	9.89	9.98	10.18	10.18	10.35	10.46	10.98	10.98	10.98	10.98
		S/T	0.83	0.95	1.00	1.00	0.63	0.75	0.88	0.99	0.54	0.66	0.77	0.89	0.34	0.45	0.56	0.67
		PI	3.84	3.84	3.84	3.84	3.86	3.86	3.86	3.86	3.86	3.86	3.87	3.86	3.86	3.86	3.86	3.86
	40	TC	8.67	8.76	8.84	8.93	9.24	9.24	9.28	9.37	9.52	9.52	9.61	9.71	10.29	10.29	10.29	10.29
		S/T	0.86	1.00	1.00	1.00	0.65	0.78	0.91	1.00	0.55	0.68	0.81	0.94	0.33	0.45	0.57	0.69
		PI	4.24	4.24	4.24	4.24	4.26	4.26	4.26	4.26	4.27	4.27	4.27	4.27	4.28	4.28	4.28	4.28
	46	TC	8.03	8.12	8.20	8.29	8.58	8.58	8.66	8.75	8.83	8.83	8.83	8.92	9.57	9.57	9.57	9.57
		S/T	0.88	1.00	1.00	1.00	0.66	0.80	0.93	1.00	0.56	0.69	0.83	0.96	0.33	0.45	0.58	0.70
		PI	4.71	4.71	4.71	4.71	4.74	4.74	4.74	4.74	4.75	4.75	4.75	4.75	4.79	4.79	4.79	4.79
	50	TC	7.52	7.61	7.69	7.78	8.06	8.06	8.15	8.23	8.32	8.32	8.32	8.40	9.03	9.03	9.03	9.03
		S/T	0.90	1.00	1.00	1.00	0.67	0.82	0.96	1.00	0.57	0.71	0.85	0.99	0.32	0.46	0.59	0.91
		PI	5.10	5.10	5.10	5.10	5.13	5.13	5.13	5.13	5.14	5.14	5.14	5.14	5.18	5.18	5.18	5.18

2100	-15	TC	11.49	11.61	11.73	11.85	12.08	12.08	12.08	12.20	12.38	12.38	12.38	12.50	13.15	13.15	13.15	13.15
		S/T	0.79	0.92	1.00	1.00	0.61	0.72	0.84	0.98	0.52	0.64	0.75	0.86	0.33	0.43	0.53	0.64
		PI	2.74	2.74	2.74	2.74	2.73	2.73	2.73	2.73	2.72	2.72	2.72	2.72	2.72	2.72	2.72	2.72
	-10	TC	11.42	11.54	11.66	11.78	12.01	12.01	12.01	12.13	12.32	12.32	12.32	12.44	13.11	13.11	13.11	13.11
		S/T	0.80	0.92	1.00	1.00	0.61	0.73	0.84	0.98	0.52	0.64	0.76	0.86	0.33	0.44	0.53	0.64
		PI	2.72	2.72	2.72	2.72	2.72	2.72	2.72	2.72	2.72	2.72	2.72	2.72	2.73	2.73	2.73	2.73
	-5	TC	11.35	11.47	11.59	11.71	11.97	11.97	11.97	12.08	12.28	12.28	12.28	12.39	13.07	13.07	13.07	13.07
		S/T	0.80	0.93	1.00	1.00	0.61	0.73	0.85	0.99	0.53	0.64	0.76	0.87	0.33	0.44	0.54	0.64
		PI	2.72	2.72	2.72	2.72	2.72	2.72	2.72	2.72	2.72	2.72	2.72	2.72	2.73	2.73	2.73	2.73
	0	TC	11.29	11.41	11.53	11.65	11.92	11.92	11.92	12.04	12.24	12.24	12.24	12.36	13.06	13.06	13.06	13.06
		S/T	0.80	0.93	1.00	1.00	0.62	0.74	0.85	0.99	0.53	0.65	0.76	0.87	0.33	0.44	0.54	0.65
		PI	2.73	2.73	2.73	2.73	2.73	2.73	2.73	2.73	2.73	2.73	2.73	2.73	2.74	2.74	2.74	2.74
	5	TC	11.24	11.36	11.47	11.59	11.87	11.87	11.87	11.99	12.20	12.20	12.20	12.32	13.05	13.05	13.05	13.05
		S/T	0.81	0.94	1.00	1.00	0.62	0.74	0.86	1.00	0.53	0.65	0.77	0.88	0.33	0.44	0.54	0.65
		PI	2.76	2.76	2.76	2.76	2.76	2.76	2.76	2.76	2.75	2.75	2.75	2.75	2.76	2.76	2.76	2.76
	10	TC	11.17	11.29	11.40	11.52	11.82	11.82	11.82	11.94	12.15	12.15	12.15	12.27	13.02	13.02	13.02	13.02
		S/T	0.81	0.94	1.00	1.00	0.62	0.74	0.86	1.00	0.53	0.65	0.77	0.88	0.34	0.45	0.54	0.65
		PI	2.80	2.80	2.80	2.80	2.80	2.80	2.80	2.80	2.79	2.79	2.79	2.79	2.80	2.80	2.80	2.80
	15	TC	11.08	11.19	11.31	11.43	11.74	11.74	11.74	11.86	12.08	12.08	12.08	12.19	12.96	12.96	12.96	12.96
		S/T	0.82	0.95	1.00	1.00	0.63	0.75	0.87	0.99	0.54	0.66	0.78	0.89	0.34	0.45	0.55	0.66
		PI	2.87	2.87	2.87	2.87	2.86	2.86	2.86	2.86	2.86	2.86	2.86	2.86	2.85	2.85	2.85	2.85
	20	TC	10.95	11.07	11.18	11.30	11.61	11.61	11.61	11.73	11.96	11.96	11.96	12.07	12.85	12.85	12.85	12.85
		S/T	0.82	0.95	1.00	1.00	0.63	0.75	0.87	0.99	0.54	0.66	0.78	0.89	0.34	0.45	0.55	0.66
		PI	2.97	2.97	2.97	2.97	2.96	2.96	2.96	2.96	2.95	2.95	2.95	2.95	2.94	2.94	2.94	2.94
	25	TC	10.46	10.58	10.69	10.81	11.10	11.10	11.21	11.33	11.44	11.44	11.44	11.56	12.30	12.30	12.30	12.30
		S/T	0.84	0.97	1.00	1.00	0.64	0.77	0.89	1.00	0.55	0.67	0.79	0.91	0.33	0.45	0.56	0.68
		PI	3.27	3.27	3.27	3.27	3.27	3.27	3.27	3.27	3.27	3.27	3.27	3.27	3.27	3.27	3.27	3.27
	30	TC	9.98	10.06	10.18	10.29	10.61	10.61	10.72	10.84	10.92	10.92	10.92	11.04	11.76	11.76	11.76	11.76
		S/T	0.86	0.99	1.00	1.00	0.65	0.78	0.91	1.00	0.55	0.68	0.81	0.93	0.33	0.45	0.57	0.69
		PI	3.59	3.59	3.59	3.59	3.60	3.60	3.60	3.60	3.60	3.60	3.60	3.60	3.62	3.62	3.62	3.62
	35	TC	9.46	9.54	9.63	9.72	10.06	10.06	10.18	10.29	10.38	10.38	**10.55**	10.67	11.21	11.21	11.21	11.21
		S/T	0.88	1.00	1.00	1.00	0.66	0.80	0.93	1.00	0.56	0.69	**0.82**	0.95	0.33	0.45	0.58	0.70
		PI	3.92	3.92	3.92	3.92	3.94	3.94	3.94	3.94	3.94	3.94	**3.95**	3.94	3.97	3.97	3.97	3.97
	40	TC	8.83	8.91	9.00	9.09	9.40	9.40	9.50	9.60	9.70	9.70	9.83	9.93	10.50	10.50	10.50	10.50
		S/T	0.92	1.00	1.00	1.00	0.68	0.83	0.98	1.00	0.57	0.72	0.87	1.00	0.32	0.46	0.60	0.90
		PI	4.32	4.32	4.32	4.32	4.34	4.34	4.34	4.34	4.35	4.35	4.36	4.35	4.39	4.39	4.39	4.39
	46	TC	8.18	8.26	8.35	8.43	8.72	8.72	8.80	8.89	9.00	9.00	9.09	9.17	9.77	9.77	9.77	9.77
		S/T	0.94	1.00	1.00	1.00	0.69	0.85	1.00	1.00	0.58	0.73	0.88	1.00	0.32	0.46	0.61	0.92
		PI	4.81	4.81	4.81	4.81	4.83	4.83	4.83	4.83	4.85	4.85	4.85	4.85	4.89	4.89	4.89	4.89
	50	TC	7.66	7.75	7.83	7.92	8.20	8.20	8.29	8.38	8.49	8.49	8.58	8.66	9.20	9.20	9.20	9.20
		S/T	0.97	1.00	1.00	1.00	0.71	0.88	1.00	1.00	0.59	0.75	0.91	1.00	0.32	0.47	0.62	0.97
		PI	5.21	5.21	5.21	5.21	5.23	5.23	5.23	5.23	5.25	5.25	5.25	5.25	5.29	5.29	5.29	5.29

TC:Total Cooling Capacity (kW)

S/T:Sensible Cooling Capacity Ratio

PI:Power Input(kW)

Note: The table shows the case where the operation frequency of a compressor is fixed.

36k+MOD30U-36HFN8-RRD0W(GA)																		
INDOOR AIRFLOW (CMH)	OUTDOOR DB(℃)	ID WB (℃)	16.0				18.0				19.0				22.0			
		ID DB (℃)	23.0	25.0	27.0	29.0	23.0	25.0	27.0	29.0	23.0	25.0	27.0	29.0	23.0	25.0	27.0	29.0
1500	-15	TC	11.05	11.06	11.18	11.30	11.63	11.87	11.87	11.99	11.90	11.90	11.90	11.90	12.65	12.65	12.65	12.65
		S/T	0.71	0.81	0.90	0.97	0.57	0.65	0.74	0.83	0.50	0.59	0.67	0.75	0.35	0.42	0.50	0.58
		PI	2.66	2.66	2.66	2.66	2.66	2.66	2.66	2.66	2.65	2.65	2.65	2.65	2.65	2.65	2.65	2.65
	-10	TC	10.99	11.00	11.11	11.23	11.56	11.80	11.80	11.92	11.84	11.84	11.84	11.84	12.60	12.60	12.60	12.60
		S/T	0.72	0.82	0.90	0.97	0.57	0.66	0.75	0.83	0.50	0.59	0.67	0.76	0.35	0.43	0.50	0.58
		PI	2.65	2.65	2.65	2.65	2.65	2.65	2.65	2.65	2.65	2.65	2.65	2.65	2.65	2.65	2.65	2.65
	-5	TC	10.92	10.93	11.05	11.17	11.52	11.76	11.76	11.88	11.80	11.80	11.80	11.80	12.57	12.57	12.57	12.57
		S/T	0.72	0.82	0.91	0.98	0.58	0.66	0.75	0.84	0.51	0.59	0.67	0.76	0.35	0.43	0.51	0.59
		PI	2.65	2.65	2.65	2.65	2.65	2.65	2.65	2.65	2.65	2.65	2.65	2.65	2.66	2.66	2.66	2.66
	0	TC	10.87	10.87	10.99	11.11	11.47	11.71	11.71	11.83	11.77	11.77	11.77	11.77	12.56	12.56	12.56	12.56
		S/T	0.73	0.82	0.91	0.98	0.58	0.66	0.75	0.84	0.51	0.60	0.68	0.76	0.35	0.43	0.51	0.59
		PI	2.66	2.66	2.66	2.66	2.66	2.66	2.66	2.66	2.66	2.66	2.66	2.66	2.67	2.67	2.67	2.67
	5	TC	10.81	10.82	10.94	11.06	11.43	11.67	11.67	11.79	11.73	11.73	11.73	11.73	12.55	12.55	12.55	12.55
		S/T	0.73	0.83	0.92	0.99	0.58	0.67	0.76	0.85	0.51	0.60	0.68	0.77	0.35	0.43	0.51	0.59
		PI	2.68	2.68	2.68	2.68	2.68	2.68	2.68	2.68	2.68	2.68	2.68	2.68	2.69	2.69	2.69	2.69
	10	TC	10.75	10.75	10.87	10.99	11.38	11.61	11.61	11.73	11.68	11.68	11.68	11.68	12.52	12.52	12.52	12.52
		S/T	0.73	0.83	0.92	0.99	0.58	0.67	0.76	0.85	0.51	0.60	0.68	0.77	0.36	0.44	0.51	0.59
		PI	2.73	2.73	2.73	2.73	2.72	2.72	2.72	2.72	2.72	2.72	2.72	2.72	2.72	2.72	2.72	2.72
	15	TC	10.66	10.67	10.78	10.90	11.30	11.54	11.54	11.65	11.61	11.61	11.61	11.61	12.46	12.46	12.46	12.46
		S/T	0.74	0.84	0.93	1.00	0.59	0.67	0.77	0.86	0.52	0.61	0.69	0.78	0.36	0.44	0.52	0.60
		PI	2.79	2.79	2.79	2.79	2.79	2.79	2.79	2.79	2.78	2.78	2.78	2.78	2.78	2.78	2.78	2.78
	20	TC	10.54	10.55	10.66	10.78	11.18	11.18	11.18	11.18	11.50	11.50	11.50	11.50	12.36	12.36	12.36	12.36
		S/T	0.74	0.84	0.93	1.00	0.59	0.68	0.77	0.86	0.52	0.61	0.69	0.78	0.36	0.44	0.52	0.60
		PI	2.89	2.89	2.89	2.89	2.88	2.88	2.88	2.88	2.87	2.87	2.87	2.87	2.86	2.86	2.86	2.86
	25	TC	10.06	10.06	10.17	10.29	10.69	10.69	10.69	10.69	11.01	11.01	11.01	11.01	11.84	11.84	11.84	11.84
		S/T	0.75	0.85	0.95	1.00	0.59	0.69	0.78	0.88	0.52	0.61	0.70	0.79	0.35	0.44	0.52	0.61
		PI	3.19	3.19	3.19	3.19	3.19	3.19	3.19	3.19	3.19	3.19	3.19	3.19	3.19	3.19	3.19	3.19
	30	TC	9.57	9.57	9.66	9.74	10.20	10.20	10.20	10.32	10.49	10.49	10.49	10.49	11.32	11.32	11.32	11.32
		S/T	0.76	0.87	0.97	1.00	0.60	0.70	0.80	0.89	0.52	0.62	0.71	0.81	0.35	0.44	0.53	0.62
		PI	3.49	3.49	3.49	3.49	3.50	3.50	3.50	3.50	3.50	3.50	3.50	3.50	3.52	3.52	3.52	3.52
	35	TC	9.11	9.20	9.28	9.37	9.68	9.68	9.68	9.77	10.00	10.00	10.14	10.00	10.78	10.78	10.78	10.78
		S/T	0.78	0.88	0.99	1.00	0.61	0.71	0.81	0.91	0.53	0.63	0.72	0.83	0.35	0.44	0.53	0.63
		PI	3.81	3.81	3.81	3.81	3.83	3.83	3.83	3.83	3.83	3.83	3.84	3.83	3.86	3.86	3.86	3.86
	40	TC	8.49	8.58	8.66	8.75	9.05	9.05	9.05	9.13	9.34	9.34	9.41	9.34	10.08	10.08	10.08	10.08
		S/T	0.80	0.92	1.00	1.00	0.62	0.73	0.85	0.96	0.53	0.64	0.76	0.87	0.34	0.44	0.54	0.65
		PI	4.21	4.21	4.21	4.21	4.23	4.23	4.23	4.23	4.23	4.23	4.24	4.23	4.26	4.26	4.26	4.26
	46	TC	7.86	7.94	8.03	8.11	8.40	8.40	8.40	8.48	8.65	8.65	8.65	8.65	9.37	9.37	9.37	9.37
		S/T	0.82	0.94	1.00	1.00	0.63	0.74	0.86	0.98	0.54	0.65	0.77	0.88	0.34	0.44	0.55	0.66
		PI	4.68	4.68	4.68	4.68	4.70	4.70	4.70	4.70	4.71	4.71	4.71	4.71	4.75	4.75	4.75	4.75
	50	TC	7.37	7.46	7.54	7.63	7.88	7.88	7.97	8.06	8.14	8.14	8.14	8.23	8.82	8.82	8.82	8.82
		S/T	0.84	0.97	1.00	1.00	0.64	0.76	0.89	1.00	0.54	0.67	0.79	0.91	0.33	0.45	0.56	0.67
		PI	5.06	5.06	5.06	5.06	5.09	5.09	5.09	5.09	5.10	5.10	5.10	5.10	5.14	5.14	5.14	5.14
1800	-15	TC	11.28	11.40	11.52	11.64	11.87	11.87	11.87	11.99	12.15	12.15	12.15	12.15	12.92	12.92	12.92	12.92
		S/T	0.75	0.86	0.98	1.00	0.59	0.69	0.79	0.89	0.51	0.61	0.70	0.81	0.33	0.42	0.52	0.61
		PI	2.72	2.72	2.72	2.72	2.71	2.71	2.71	2.71	2.71	2.71	2.71	2.71	2.71	2.71	2.71	2.71
	-10	TC	11.21	11.33	11.45	11.57	11.80	11.80	11.80	11.92	12.08	12.08	12.08	12.08	12.87	12.87	12.87	12.87
		S/T	0.76	0.86	0.99	1.00	0.59	0.69	0.80	0.89	0.51	0.61	0.71	0.82	0.33	0.43	0.52	0.61
		PI	2.71	2.71	2.71	2.71	2.71	2.71	2.71	2.71	2.70	2.70	2.70	2.70	2.71	2.71	2.71	2.71
	-5	TC	11.14	11.26	11.38	11.50	11.76	11.76	11.76	11.88	12.04	12.04	12.04	12.04	12.84	12.84	12.84	12.84
		S/T	0.76	0.87	0.99	1.00	0.59	0.69	0.80	0.90	0.52	0.61	0.71	0.82	0.33	0.43	0.53	0.61
		PI	2.70	2.70	2.70	2.70	2.70	2.70	2.70	2.70	2.70	2.70	2.70	2.70	2.71	2.71	2.71	2.71
	0	TC	11.09	11.21	11.32	11.44	11.71	11.71	11.71	11.83	12.01	12.01	12.01	12.01	12.83	12.83	12.83	12.83
		S/T	0.76	0.87	1.00	1.00	0.60	0.70	0.80	0.90	0.52	0.62	0.72	0.82	0.33	0.43	0.53	0.62
		PI	2.71	2.71	2.71	2.71	2.71	2.71	2.71	2.71	2.71	2.71	2.71	2.71	2.72	2.72	2.72	2.72
	5	TC	11.03	11.15	11.27	11.38	11.67	11.67	11.67	11.79	11.97	11.97	11.97	11.97	12.82	12.82	12.82	12.82
		S/T	0.77	0.88	1.00	1.00	0.60	0.70	0.81	0.91	0.52	0.62	0.72	0.83	0.33	0.43	0.53	0.62
		PI	2.74	2.74	2.74	2.74	2.74	2.74	2.74	2.74	2.73	2.73	2.73	2.73	2.74	2.74	2.74	2.74
	10	TC	10.96	11.08	11.20	11.32	11.61	11.61	11.61	11.73	11.92	11.92	11.92	11.92	12.78	12.78	12.78	12.78
		S/T	0.77	0.88	1.00	1.00	0.60	0.70	0.81	0.91	0.52	0.62	0.72	0.83	0.34	0.44	0.53	0.62
		PI	2.78	2.78	2.78	2.78	2.78	2.78	2.78	2.78	2.77	2.77	2.77	2.77	2.78	2.78	2.78	2.78
	15	TC	10.87	10.99	11.11	11.22	11.54	11.54	11.54	11.65	11.85	11.85	11.85	11.85	12.73	12.73	12.73	12.73
		S/T	0.78	0.89	0.99	1.00	0.61	0.71	0.82	0.92	0.53	0.63	0.73	0.84	0.34	0.44	0.54	0.63
		PI	2.85	2.85	2.85	2.85	2.84	2.84	2.84	2.84	2.84	2.84	2.84	2.84	2.84	2.84	2.84	2.84
	20	TC	10.75	10.87	10.98	11.10	11.41	11.41	11.41	11.53	11.73	11.73	11.73	11.73	12.62	12.62	12.62	12.62
		S/T	0.78	0.89	0.99	1.00	0.61	0.71	0.82	0.92	0.53	0.63	0.73	0.84	0.34	0.44	0.54	0.63
		PI	2.95	2.95	2.95	2.95	2.94	2.94	2.94	2.94	2.93	2.93	2.93	2.93	2.92	2.92	2.92	2.92
	25	TC	10.26	10.38	10.49	10.61	10.90	10.90	10.90	11.01	11.21	11.21	11.21	11.21	12.07	12.07	12.07	12.07
		S/T	0.79	0.91	1.00	1.00	0.61	0.73	0.84	0.94	0.53	0.64	0.75	0.86	0.34	0.44	0.54	0.64
		PI	3.25	3.25	3.25	3.25	3.25	3.25	3.25	3.25	3.25	3.25	3.25	3.25	3.25	3.25	3.25	3.25
	30	TC	9.77	9.86	9.95	10.03	10.41	10.41	10.41	10.52	10.72	10.72	10.72	10.72	11.53	11.53	11.53	11.53
		S/T	0.81	0.93	1.00	1.00	0.62	0.74	0.85	0.97	0.54	0.65	0.76	0.87	0.34	0.44	0.55	0.65
		PI	3.56	3.56	3.56	3.56	3.57	3.57	3.57	3.57	3.57	3.57	3.57	3.57	3.59	3.59	3.59	3.59
	35	TC	9.29	9.37	9.46	9.54	9.89	9.89	9.89	9.98	10.18	10.18	10.35	10.46	10.98	10.98	10.98	10.98
		S/T	0.83	0.95	1.00	1.00	0.63	0.75	0.88	0.99	0.54	0.66	0.77	0.89	0.34	0.45	0.56	0.67
		PI	3.89	3.89	3.89	3.89	3.91	3.91	3.91	3.91	3.91	3.91	3.92	3.91	3.91	3.91	3.91	3.91
	40	TC	8.67	8.76	8.84	8.93	9.24	9.24	9.28	9.37	9.52	9.52	9.61	9.71	10.29	10.29	10.29	10.29
		S/T	0.86	1.00	1.00	1.00	0.65	0.78	0.91	1.00	0.55	0.68	0.81	0.94	0.33	0.45	0.57	0.69
		PI	4.29	4.29	4.29	4.29	4.32	4.32	4.32	4.32	4.32	4.32	4.33	4.32	4.34	4.34	4.34	4.34
	46	TC	8.03	8.12	8.20	8.29	8.58	8.58	8.66	8.75	8.83	8.83	8.83	8.92	9.57	9.57	9.57	9.57
		S/T	0.88	1.00	1.00	1.00	0.66	0.80	0.93	1.00	0.56	0.69	0.83	0.96	0.33	0.45	0.58	0.70
		PI	4.77	4.77	4.77	4.77	4.80	4.80	4.80	4.80	4.81	4.81	4.81	4.81	4.85	4.85	4.85	4.85
	50	TC	7.52	7.61	7.69	7.78	8.06	8.06	8.15	8.23	8.32	8.32	8.32	8.40	9.03	9.03	9.03	9.03
		S/T	0.90	1.00	1.00	1.00	0.67	0.82	0.96	1.00	0.57	0.71	0.85	0.99	0.32	0.46	0.59	0.91
		PI	5.17	5.17	5.17	5.17	5.19	5.19	5.19	5.19	5.21	5.21	5.21	5.21	5.25	5.25	5.25	5.25

2100	-15	TC	11.49	11.61	11.73	11.85	12.08	12.08	12.08	12.20	12.38	12.38	12.38	12.50	13.15	13.15	13.15	13.15
		S/T	0.79	0.92	1.00	1.00	0.61	0.72	0.84	0.98	0.52	0.64	0.75	0.86	0.33	0.43	0.53	0.64
		PI	2.77	2.77	2.77	2.77	2.77	2.77	2.77	2.77	2.76	2.76	2.76	2.76	2.76	2.76	2.76	2.76
	-10	TC	11.42	11.54	11.66	11.78	12.01	12.01	12.01	12.13	12.32	12.32	12.32	12.44	13.11	13.11	13.11	13.11
		S/T	0.80	0.92	1.00	1.00	0.61	0.73	0.84	0.98	0.52	0.64	0.76	0.86	0.33	0.44	0.53	0.64
		PI	2.76	2.76	2.76	2.76	2.76	2.76	2.76	2.76	2.76	2.76	2.76	2.76	2.76	2.76	2.76	2.76
	-5	TC	11.35	11.47	11.59	11.71	11.97	11.97	11.97	12.08	12.28	12.28	12.28	12.39	13.07	13.07	13.07	13.07
		S/T	0.80	0.93	1.00	1.00	0.61	0.73	0.85	0.99	0.53	0.64	0.76	0.87	0.33	0.44	0.54	0.64
		PI	2.76	2.76	2.76	2.76	2.76	2.76	2.76	2.76	2.76	2.76	2.76	2.76	2.77	2.77	2.77	2.77
	0	TC	11.29	11.41	11.53	11.65	11.92	11.92	11.92	12.04	12.24	12.24	12.24	12.36	13.06	13.06	13.06	13.06
		S/T	0.80	0.93	1.00	1.00	0.62	0.74	0.85	0.99	0.53	0.65	0.76	0.87	0.33	0.44	0.54	0.65
		PI	2.77	2.77	2.77	2.77	2.77	2.77	2.77	2.77	2.77	2.77	2.77	2.77	2.78	2.78	2.78	2.78
	5	TC	11.24	11.36	11.47	11.59	11.87	11.87	11.87	11.99	12.20	12.20	12.20	12.32	13.05	13.05	13.05	13.05
		S/T	0.81	0.94	1.00	1.00	0.62	0.74	0.86	1.00	0.53	0.65	0.77	0.88	0.33	0.44	0.54	0.65
		PI	2.79	2.79	2.79	2.79	2.79	2.79	2.79	2.79	2.79	2.79	2.79	2.79	2.80	2.80	2.80	2.80
	10	TC	11.17	11.29	11.40	11.52	11.82	11.82	11.82	11.94	12.15	12.15	12.15	12.27	13.02	13.02	13.02	13.02
		S/T	0.81	0.94	1.00	1.00	0.62	0.74	0.86	1.00	0.53	0.65	0.77	0.88	0.34	0.45	0.54	0.65
		PI	2.84	2.84	2.84	2.84	2.83	2.83	2.83	2.83	2.83	2.83	2.83	2.83	2.83	2.83	2.83	2.83
	15	TC	11.08	11.19	11.31	11.43	11.74	11.74	11.74	11.86	12.08	12.08	12.08	12.19	12.96	12.96	12.96	12.96
		S/T	0.82	0.95	1.00	1.00	0.63	0.75	0.87	0.99	0.54	0.66	0.78	0.89	0.34	0.45	0.55	0.66
		PI	2.91	2.91	2.91	2.91	2.90	2.90	2.90	2.90	2.89	2.89	2.89	2.89	2.89	2.89	2.89	2.89
	20	TC	10.95	11.07	11.18	11.30	11.61	11.61	11.61	11.73	11.96	11.96	11.96	12.07	12.85	12.85	12.85	12.85
		S/T	0.82	0.95	1.00	1.00	0.63	0.75	0.87	0.99	0.54	0.66	0.78	0.89	0.34	0.45	0.55	0.66
		PI	3.01	3.01	3.01	3.01	3.00	3.00	3.00	3.00	2.99	2.99	2.99	2.99	2.98	2.98	2.98	2.98
	25	TC	10.46	10.58	10.69	10.81	11.10	11.10	11.21	11.33	11.44	11.44	11.44	11.56	12.30	12.30	12.30	12.30
		S/T	0.84	0.97	1.00	1.00	0.64	0.77	0.89	1.00	0.55	0.67	0.79	0.91	0.33	0.45	0.56	0.68
		PI	3.31	3.31	3.31	3.31	3.31	3.31	3.31	3.31	3.31	3.31	3.31	3.31	3.31	3.31	3.31	3.31
	30	TC	9.98	10.06	10.18	10.29	10.61	10.61	10.72	10.84	10.92	10.92	10.92	11.04	11.76	11.76	11.76	11.76
		S/T	0.86	0.99	1.00	1.00	0.65	0.78	0.91	1.00	0.55	0.68	0.81	0.93	0.33	0.45	0.57	0.69
		PI	3.63	3.63	3.63	3.63	3.64	3.64	3.64	3.64	3.65	3.65	3.65	3.65	3.66	3.66	3.66	3.66
	35	TC	9.46	9.54	9.63	9.72	10.06	10.06	10.18	10.29	10.38	10.38	**10.55**	10.67	11.21	11.21	11.21	11.21
		S/T	0.88	1.00	1.00	1.00	0.66	0.80	0.93	1.00	0.56	0.69	**0.82**	0.95	0.33	0.45	0.58	0.70
		PI	3.97	3.97	3.97	3.97	3.99	3.99	3.99	3.99	3.99	3.99	**4.00**	3.99	4.02	4.02	4.02	4.02
	40	TC	8.83	8.91	9.00	9.09	9.40	9.40	9.50	9.60	9.70	9.70	9.83	9.93	10.50	10.50	10.50	10.50
		S/T	0.92	1.00	1.00	1.00	0.68	0.83	0.98	1.00	0.57	0.72	0.87	1.00	0.32	0.46	0.60	0.90
		PI	4.38	4.38	4.38	4.38	4.40	4.40	4.40	4.40	4.41	4.41	4.41	4.41	4.44	4.44	4.44	4.44
	46	TC	8.18	8.26	8.35	8.43	8.72	8.72	8.80	8.89	9.00	9.00	9.09	9.17	9.77	9.77	9.77	9.77
		S/T	0.94	1.00	1.00	1.00	0.69	0.85	1.00	1.00	0.58	0.73	0.88	1.00	0.32	0.46	0.61	0.92
		PI	4.87	4.87	4.87	4.87	4.89	4.89	4.89	4.89	4.91	4.91	4.91	4.91	4.95	4.95	4.95	4.95
	50	TC	7.66	7.75	7.83	7.92	8.20	8.20	8.29	8.38	8.49	8.49	8.58	8.66	9.20	9.20	9.20	9.20
		S/T	0.97	1.00	1.00	1.00	0.71	0.88	1.00	1.00	0.59	0.75	0.91	1.00	0.32	0.47	0.62	0.97
		PI	5.27	5.27	5.27	5.27	5.30	5.30	5.30	5.30	5.31	5.31	5.31	5.31	5.35	5.35	5.35	5.35

TC:Total Cooling Capacity (kW)

S/T:Sensible Cooling Capacity Ratio

PI:Power Input(kW)

Note: The table shows the case where the operation frequency of a compressor is fixed.

42k																		
INDOOR AIRFLOW (CMH)	OUTDOOR DB(℃)	ID WB (℃)	16.0				18.0				19.0				22.0			
		ID DB (℃)	23.0	25.0	27.0	29.0	23.0	25.0	27.0	29.0	23.0	25.0	27.0	29.0	23.0	25.0	27.0	29.0
1680	-15	TC	12.59	12.60	12.72	12.84	13.24	13.51	13.51	13.66	13.57	13.57	13.57	13.57	14.41	14.41	14.41	14.41
		S/T	0.71	0.80	0.89	0.97	0.57	0.65	0.73	0.82	0.50	0.58	0.67	0.75	0.35	0.42	0.50	0.58
		PI	2.80	2.80	2.80	2.80	2.80	2.80	2.80	2.80	2.79	2.79	2.79	2.79	2.79	2.79	2.79	2.79
	-10	TC	12.51	12.52	12.64	12.76	13.16	13.44	13.44	13.59	13.50	13.50	13.50	13.50	14.36	14.36	14.36	14.36
		S/T	0.72	0.81	0.89	0.97	0.57	0.66	0.74	0.82	0.50	0.58	0.67	0.76	0.35	0.43	0.50	0.58
		PI	2.79	2.79	2.79	2.79	2.79	2.79	2.79	2.79	2.78	2.78	2.78	2.78	2.79	2.79	2.79	2.79
	-5	TC	12.44	12.45	12.57	12.69	13.11	13.39	13.39	13.53	13.45	13.45	13.45	13.45	14.32	14.32	14.32	14.32
		S/T	0.72	0.81	0.90	0.98	0.58	0.66	0.74	0.83	0.51	0.59	0.67	0.76	0.35	0.43	0.51	0.59
		PI	2.79	2.78	2.78	2.79	2.79	2.79	2.79	2.79	2.78	2.78	2.78	2.78	2.80	2.80	2.80	2.80
	0	TC	12.38	12.39	12.50	12.62	13.06	13.34	13.34	13.48	13.41	13.41	13.41	13.41	14.31	14.31	14.31	14.31
		S/T	0.73	0.81	0.90	0.98	0.58	0.66	0.74	0.83	0.51	0.59	0.68	0.76	0.35	0.43	0.51	0.59
		PI	2.80	2.80	2.80	2.80	2.80	2.80	2.80	2.80	2.80	2.80	2.80	2.80	2.81	2.81	2.81	2.81
	5	TC	12.31	12.32	12.44	12.56	13.02	13.28	13.28	13.43	13.37	13.37	13.37	13.37	14.30	14.30	14.30	14.30
		S/T	0.73	0.82	0.91	0.99	0.58	0.66	0.75	0.84	0.51	0.59	0.68	0.77	0.35	0.43	0.51	0.59
		PI	2.82	2.82	2.82	2.82	2.82	2.82	2.82	2.82	2.82	2.82	2.82	2.82	2.83	2.83	2.83	2.83
	10	TC	12.24	12.25	12.37	12.48	12.95	13.22	13.22	13.37	13.31	13.31	13.31	13.31	14.26	14.26	14.26	14.26
		S/T	0.73	0.82	0.91	0.99	0.58	0.67	0.75	0.84	0.51	0.59	0.68	0.77	0.36	0.44	0.51	0.59
		PI	2.87	2.87	2.87	2.87	2.86	2.86	2.86	2.86	2.86	2.86	2.86	2.86	2.86	2.86	2.86	2.86
	15	TC	12.14	12.15	12.27	12.38	12.87	13.13	13.13	13.28	13.23	13.23	13.23	13.23	14.20	14.20	14.20	14.20
		S/T	0.74	0.83	0.92	1.00	0.59	0.67	0.76	0.85	0.52	0.60	0.69	0.78	0.36	0.44	0.52	0.60
		PI	2.94	2.94	2.94	2.94	2.93	2.93	2.93	2.93	2.92	2.92	2.92	2.92	2.92	2.92	2.92	2.92
	20	TC	12.00	12.01	12.13	12.24	12.73	12.73	12.73	12.73	13.10	13.10	13.10	13.10	14.08	14.08	14.08	14.08
		S/T	0.74	0.83	0.92	1.00	0.59	0.68	0.76	0.85	0.52	0.60	0.69	0.78	0.36	0.44	0.52	0.60
		PI	3.04	3.04	3.04	3.04	3.03	3.03	3.03	3.03	3.02	3.02	3.02	3.02	3.01	3.01	3.01	3.01
	25	TC	11.44	11.44	11.55	11.67	12.16	12.16	12.16	12.16	12.53	12.53	12.53	12.53	13.48	13.48	13.48	13.48
		S/T	0.75	0.85	0.94	1.00	0.59	0.68	0.78	0.87	0.52	0.61	0.70	0.79	0.35	0.44	0.52	0.60
		PI	3.35	3.35	3.35	3.35	3.35	3.35	3.35	3.35	3.35	3.35	3.35	3.35	3.35	3.35	3.35	3.35
	30	TC	10.92	10.92	11.03	11.15	11.61	11.61	11.61	11.72	11.95	11.95	11.95	11.95	12.87	12.87	12.87	12.87
		S/T	0.76	0.86	0.96	1.00	0.60	0.69	0.79	0.88	0.52	0.62	0.71	0.80	0.35	0.44	0.52	0.61
		PI	3.67	3.67	3.67	3.67	3.68	3.68	3.68	3.68	3.68	3.68	3.68	3.68	3.70	3.70	3.70	3.70
	35	TC	10.37	10.37	10.49	10.60	11.03	11.03	11.03	11.15	11.38	11.38	11.55	11.38	12.27	12.27	12.27	12.27
		S/T	0.77	0.88	0.98	1.00	0.60	0.71	0.81	0.91	0.53	0.62	0.72	0.82	0.35	0.44	0.53	0.62
		PI	4.01	4.01	4.01	4.01	4.03	4.03	4.03	4.03	4.03	4.03	4.04	4.03	4.06	4.06	4.06	4.06
	40	TC	9.68	9.71	9.82	9.92	10.32	10.32	10.32	10.42	10.65	10.65	10.74	10.65	11.49	11.49	11.49	11.49
		S/T	0.80	0.91	1.00	1.00	0.62	0.73	0.84	0.95	0.53	0.64	0.75	0.86	0.34	0.44	0.54	0.64
		PI	4.43	4.43	4.43	4.43	4.44	4.44	4.44	4.44	4.45	4.45	4.46	4.45	4.49	4.49	4.49	4.49
	46	TC	8.95	9.03	9.12	9.20	9.57	9.57	9.57	9.66	9.89	9.89	9.89	9.89	10.68	10.68	10.68	10.68
		S/T	0.81	0.93	1.00	1.00	0.62	0.74	0.86	0.97	0.54	0.65	0.76	0.88	0.34	0.44	0.55	0.65
		PI	4.92	4.92	4.92	4.92	4.94	4.94	4.94	4.94	4.96	4.96	4.96	4.96	5.00	5.00	5.00	5.00
	50	TC	8.40	8.49	8.57	8.66	8.97	8.97	8.97	9.06	9.29	9.29	9.29	9.37	10.06	10.06	10.06	10.06
		S/T	0.83	0.96	1.00	1.00	0.63	0.76	0.88	1.00	0.54	0.66	0.78	0.90	0.33	0.45	0.56	0.67
		PI	5.33	5.33	5.33	5.33	5.35	5.35	5.35	5.35	5.36	5.36	5.36	5.36	5.41	5.41	5.41	5.41
2040	-15	TC	12.84	12.96	13.08	13.20	13.51	13.51	13.51	13.66	13.84	13.84	13.84	13.84	14.71	14.71	14.71	14.71
		S/T	0.75	0.86	0.98	1.00	0.59	0.69	0.79	0.89	0.51	0.61	0.70	0.81	0.33	0.42	0.51	0.61
		PI	2.86	2.86	2.86	2.86	2.85	2.85	2.85	2.85	2.85	2.85	2.85	2.85	2.84	2.84	2.84	2.84
	-10	TC	12.77	12.89	13.01	13.13	13.44	13.44	13.44	13.59	13.77	13.77	13.77	13.77	14.66	14.66	14.66	14.66
		S/T	0.76	0.86	0.99	1.00	0.59	0.69	0.80	0.89	0.51	0.61	0.71	0.82	0.33	0.43	0.51	0.61
		PI	2.84	2.84	2.84	2.84	2.84	2.84	2.84	2.84	2.84	2.84	2.84	2.84	2.85	2.85	2.85	2.85
	-5	TC	12.69	12.81	12.93	13.05	13.39	13.39	13.39	13.53	13.72	13.72	13.72	13.72	14.62	14.62	14.62	14.62
		S/T	0.76	0.87	0.99	1.00	0.59	0.69	0.80	0.90	0.52	0.61	0.71	0.82	0.33	0.43	0.52	0.61
		PI	2.84	2.84	2.84	2.84	2.84	2.84	2.84	2.84	2.84	2.84	2.84	2.84	2.85	2.85	2.85	2.85
	0	TC	12.63	12.75	12.86	12.98	13.34	13.34	13.34	13.48	13.68	13.68	13.68	13.68	14.61	14.61	14.61	14.61
		S/T	0.76	0.87	1.00	1.00	0.60	0.70	0.80	0.90	0.52	0.62	0.72	0.82	0.33	0.43	0.52	0.62
		PI	2.85	2.85	2.85	2.85	2.85	2.85	2.85	2.85	2.85	2.85	2.85	2.85	2.86	2.86	2.86	2.86
	5	TC	12.56	12.68	12.80	12.92	13.28	13.28	13.28	13.43	13.64	13.64	13.64	13.64	14.60	14.60	14.60	14.60
		S/T	0.77	0.88	1.00	1.00	0.60	0.70	0.81	0.91	0.52	0.62	0.72	0.83	0.33	0.43	0.52	0.62
		PI	2.88	2.88	2.88	2.88	2.88	2.88	2.88	2.88	2.87	2.87	2.87	2.87	2.88	2.88	2.88	2.88
	10	TC	12.49	12.60	12.72	12.84	13.22	13.22	13.22	13.37	13.58	13.58	13.58	13.58	14.56	14.56	14.56	14.56
		S/T	0.77	0.88	1.00	1.00	0.60	0.70	0.81	0.91	0.52	0.62	0.72	0.83	0.34	0.44	0.52	0.62
		PI	2.93	2.93	2.93	2.93	2.92	2.92	2.92	2.92	2.92	2.92	2.92	2.92	2.92	2.92	2.92	2.92
	15	TC	12.39	12.50	12.62	12.73	13.13	13.13	13.13	13.28	13.50	13.50	13.50	13.50	14.50	14.50	14.50	14.50
		S/T	0.78	0.89	0.99	1.00	0.61	0.71	0.82	0.92	0.53	0.63	0.73	0.84	0.34	0.44	0.53	0.63
		PI	3.00	3.00	3.00	3.00	2.99	2.99	2.99	2.99	2.98	2.98	2.98	2.98	2.98	2.98	2.98	2.98
	20	TC	12.25	12.36	12.48	12.59	12.99	12.99	12.99	13.14	13.37	13.37	13.37	13.37	14.37	14.37	14.37	14.37
		S/T	0.78	0.89	0.99	1.00	0.61	0.71	0.82	0.92	0.53	0.63	0.73	0.84	0.34	0.44	0.53	0.63
		PI	3.10	3.10	3.10	3.10	3.09	3.09	3.09	3.09	3.08	3.08	3.08	3.08	3.07	3.07	3.07	3.07
	25	TC	11.67	11.79	11.90	12.02	12.42	12.42	12.42	12.53	12.79	12.79	12.79	12.79	13.74	13.74	13.74	13.74
		S/T	0.79	0.91	1.00	1.00	0.61	0.72	0.83	0.94	0.53	0.64	0.75	0.85	0.34	0.44	0.54	0.64
		PI	3.41	3.41	3.41	3.41	3.41	3.41	3.41	3.41	3.41	3.41	3.41	3.41	3.41	3.41	3.41	3.41
	30	TC	11.13	11.24	11.36	11.47	11.84	11.84	11.84	11.96	12.19	12.19	12.19	12.19	13.14	13.14	13.14	13.14
		S/T	0.81	0.93	1.00	1.00	0.62	0.74	0.85	0.96	0.54	0.65	0.76	0.87	0.34	0.44	0.55	0.65
		PI	3.74	3.74	3.74	3.74	3.75	3.75	3.75	3.75	3.76	3.76	3.76	3.76	3.77	3.77	3.77	3.77
	35	TC	10.58	10.69	10.81	10.92	11.27	11.27	11.27	11.38	11.61	11.61	11.79	11.90	12.53	12.53	12.53	12.53
		S/T	0.82	0.95	1.00	1.00	0.63	0.75	0.87	0.99	0.54	0.66	0.77	0.88	0.34	0.44	0.55	0.66
		PI	4.09	4.09	4.09	4.09	4.11	4.11	4.11	4.11	4.11	4.11	4.12	4.11	4.11	4.11	4.11	4.11
	40	TC	9.86	9.96	10.06	10.16	10.50	10.50	10.54	10.64	10.83	10.83	10.92	11.03	11.71	11.71	11.71	11.71
		S/T	0.86	1.00	1.00	1.00	0.65	0.78	0.91	1.00	0.55	0.68	0.81	0.93	0.33	0.45	0.57	0.69
		PI	4.52	4.52	4.52	4.52	4.54	4.54	4.54	4.54	4.55	4.55	4.56	4.55	4.57	4.57	4.57	4.57
	46	TC	9.13	9.21	9.30	9.38	9.72	9.72	9.81	9.89	10.04	10.04	10.04	10.15	10.89	10.89	10.89	10.89
		S/T	0.87	1.00	1.00	1.00	0.66	0.80	0.93	1.00	0.56	0.69	0.83	0.96	0.33	0.45	0.58	0.70
		PI	5.03	5.03	5.03	5.03	5.05	5.05	5.05	5.05	5.07	5.07	5.07	5.07	5.11	5.11	5.11	5.11
	50	TC	8.56	8.64	8.73	8.81	9.16	9.16	9.24	9.33	9.44	9.44	9.44	9.52	10.24	10.24	10.24	10.24
		S/T	0.90	1.00	1.00	1.00	0.67	0.82	0.96	1.00	0.56	0.71	0.85	0.99	0.32	0.46	0.59	0.91
		PI	5.45	5.45	5.45	5.45	5.47	5.47	5.47	5.47	5.48	5.48	5.48	5.48	5.53	5.53	5.53	5.53

2400	-15	TC	13.08	13.20	13.33	13.45	13.78	13.78	13.78	13.93	14.11	14.11	14.11	14.26	14.97	14.97	14.97	14.97
		S/T	0.79	0.92	1.00	1.00	0.61	0.72	0.84	0.98	0.52	0.64	0.75	0.86	0.33	0.43	0.54	0.65
		PI	2.91	2.91	2.91	2.91	2.91	2.91	2.91	2.91	2.90	2.90	2.90	2.90	2.90	2.90	2.90	2.90
	-10	TC	13.01	13.13	13.25	13.37	13.70	13.70	13.70	13.85	14.04	14.04	14.04	14.19	14.92	14.92	14.92	14.92
		S/T	0.80	0.92	1.00	1.00	0.61	0.73	0.84	0.98	0.52	0.64	0.76	0.86	0.33	0.44	0.54	0.65
		PI	2.90	2.90	2.90	2.90	2.90	2.90	2.90	2.90	2.89	2.89	2.89	2.89	2.90	2.90	2.90	2.90
	-5	TC	12.93	13.05	13.17	13.29	13.65	13.65	13.65	13.80	13.99	13.99	13.99	14.13	14.89	14.89	14.89	14.89
		S/T	0.80	0.93	1.00	1.00	0.61	0.73	0.85	0.99	0.53	0.64	0.76	0.87	0.33	0.44	0.55	0.65
		PI	2.89	2.89	2.89	2.89	2.89	2.89	2.89	2.89	2.89	2.89	2.89	2.89	2.91	2.91	2.91	2.91
	0	TC	12.86	12.98	13.10	13.22	13.60	13.60	13.60	13.75	13.95	13.95	13.95	14.10	14.87	14.87	14.87	14.87
		S/T	0.80	0.93	1.00	1.00	0.62	0.74	0.85	0.99	0.53	0.65	0.76	0.87	0.33	0.44	0.55	0.66
		PI	2.90	2.90	2.90	2.90	2.91	2.91	2.91	2.91	2.91	2.91	2.91	2.91	2.92	2.92	2.92	2.92
	5	TC	12.80	12.92	13.04	13.15	13.55	13.55	13.55	13.70	13.90	13.90	13.90	14.05	14.86	14.86	14.86	14.86
		S/T	0.81	0.94	1.00	1.00	0.62	0.74	0.86	1.00	0.53	0.65	0.77	0.88	0.33	0.44	0.55	0.66
		PI	2.93	2.93	2.93	2.93	2.93	2.93	2.93	2.93	2.93	2.93	2.93	2.93	2.94	2.94	2.94	2.94
	10	TC	12.72	12.84	12.96	13.07	13.48	13.48	13.48	13.63	13.85	13.85	13.85	13.99	14.82	14.82	14.82	14.82
		S/T	0.81	0.94	1.00	1.00	0.62	0.74	0.86	1.00	0.53	0.65	0.77	0.88	0.34	0.45	0.55	0.66
		PI	2.98	2.98	2.98	2.98	2.98	2.98	2.98	2.98	2.97	2.97	2.97	2.97	2.98	2.98	2.98	2.98
	15	TC	12.62	12.73	12.85	12.97	13.39	13.39	13.39	13.54	13.76	13.76	13.76	13.91	14.76	14.76	14.76	14.76
		S/T	0.82	0.95	1.00	1.00	0.63	0.75	0.87	0.99	0.54	0.66	0.78	0.89	0.34	0.45	0.56	0.67
		PI	3.05	3.05	3.05	3.05	3.05	3.05	3.05	3.05	3.04	3.04	3.04	3.04	3.04	3.04	3.04	3.04
	20	TC	12.48	12.59	12.71	12.82	13.25	13.25	13.25	13.40	13.63	13.63	13.63	13.77	14.63	14.63	14.63	14.63
		S/T	0.82	0.95	1.00	1.00	0.63	0.75	0.87	0.99	0.54	0.66	0.78	0.89	0.34	0.45	0.56	0.67
		PI	3.16	3.16	3.16	3.16	3.15	3.15	3.15	3.15	3.14	3.14	3.14	3.14	3.13	3.13	3.13	3.13
	25	TC	11.90	12.02	12.13	12.25	12.65	12.65	12.76	12.88	13.02	13.02	13.02	13.17	14.03	14.03	14.03	14.03
		S/T	0.84	0.97	1.00	1.00	0.64	0.77	0.89	1.00	0.55	0.67	0.79	0.91	0.33	0.45	0.56	0.68
		PI	3.48	3.48	3.48	3.48	3.48	3.48	3.48	3.48	3.48	3.48	3.48	3.48	3.48	3.48	3.48	3.48
	30	TC	11.36	11.47	11.59	11.70	12.07	12.07	12.19	12.30	12.45	12.45	12.45	12.56	13.40	13.40	13.40	13.40
		S/T	0.86	0.99	1.00	1.00	0.65	0.78	0.91	1.00	0.55	0.68	0.81	0.94	0.33	0.45	0.57	0.69
		PI	3.82	3.82	3.82	3.82	3.82	3.82	3.82	3.82	3.83	3.83	3.83	3.83	3.85	3.85	3.85	3.85
	35	TC	10.78	10.90	11.01	11.13	11.47	11.47	11.59	11.70	11.84	11.84	**12.02**	12.13	12.76	12.76	12.76	12.76
		S/T	0.88	1.00	1.00	1.00	0.66	0.80	0.93	1.00	0.56	0.69	**0.82**	0.95	0.33	0.45	0.58	0.71
		PI	4.17	4.17	4.17	4.17	4.19	4.19	4.19	4.19	4.19	4.19	**4.20**	4.19	4.22	4.22	4.22	4.22
	40	TC	10.04	10.14	10.24	10.34	10.70	10.70	10.80	10.91	11.04	11.04	11.19	11.30	11.93	11.93	11.93	11.93
		S/T	0.92	1.00	1.00	1.00	0.68	0.83	0.98	1.00	0.57	0.72	0.87	1.00	0.32	0.46	0.60	0.90
		PI	4.61	4.61	4.61	4.61	4.63	4.63	4.63	4.63	4.63	4.63	4.64	4.63	4.67	4.67	4.67	4.67
	46	TC	9.30	9.38	9.47	9.55	9.92	9.92	10.01	10.12	10.24	10.24	10.35	10.46	11.09	11.09	11.09	11.09
		S/T	0.94	1.00	1.00	1.00	0.69	0.85	1.00	1.00	0.58	0.73	0.88	1.00	0.32	0.46	0.61	0.92
		PI	5.13	5.13	5.13	5.13	5.15	5.15	5.15	5.15	5.16	5.16	5.16	5.16	5.21	5.21	5.21	5.21
	50	TC	8.73	8.81	8.90	8.98	9.33	9.33	9.41	9.50	9.64	9.64	9.72	9.81	10.46	10.46	10.46	10.46
		S/T	0.97	1.00	1.00	1.00	0.71	0.88	1.00	1.00	0.59	0.75	0.91	1.00	0.32	0.47	0.62	0.97
		PI	5.55	5.55	5.55	5.55	5.57	5.57	5.57	5.57	5.59	5.59	5.59	5.59	5.63	5.63	5.63	5.63

TC:Total Cooling Capacity (kW)

S/T:Sensible Cooling Capacity Ratio

PI:Power Input(kW)

Note: The table shows the case where the operation frequency of a compressor is fixed.

48k																			
INDOOR AIRFLOW (CMH)	OUTDOOR DB(℃)	ID WB (℃)	16.0				18.0				19.0				22.0				
		ID DB (℃)	23.0	25.0	27.0	29.0	23.0	25.0	27.0	29.0	23.0	25.0	27.0	29.0	23.0	25.0	27.0	29.0	
1680	-15	TC	14.70	14.69	14.69	14.84	15.46	15.79	15.79	15.79	15.84	15.84	15.84	15.84	16.83	16.83	16.83	16.83	
		S/T	0.69	0.76	0.84	0.92	0.55	0.63	0.70	0.77	0.49	0.57	0.64	0.70	0.36	0.42	0.49	0.55	
		PI	3.19	3.19	3.19	3.19	3.18	3.18	3.18	3.18	3.18	3.18	3.18	3.18	3.17	3.17	3.17	3.17	
	-10	TC	14.61	14.60	14.60	14.75	15.37	15.71	15.71	15.71	15.76	15.76	15.76	15.76	16.77	16.77	16.77	16.77	
		S/T	0.69	0.77	0.84	0.92	0.55	0.63	0.71	0.78	0.49	0.57	0.64	0.71	0.36	0.43	0.49	0.55	
		PI	3.18	3.18	3.18	3.18	3.17	3.17	3.17	3.17	3.18	3.18	3.18	3.18	3.18	3.18	3.18	3.18	
	-5	TC	14.52	14.51	14.51	14.66	15.31	15.65	15.65	15.65	15.70	15.70	15.70	15.70	16.73	16.73	16.73	16.73	
		S/T	0.69	0.77	0.85	0.93	0.56	0.63	0.71	0.78	0.50	0.58	0.64	0.71	0.36	0.43	0.50	0.56	
		PI	3.17	3.17	3.17	3.17	3.17	3.17	3.17	3.17	3.18	3.18	3.18	3.18	3.18	3.18	3.18	3.18	
	0	TC	14.45	14.44	14.44	14.59	15.26	15.59	15.59	15.59	15.66	15.66	15.66	15.66	16.71	16.71	16.71	16.71	
		S/T	0.70	0.77	0.85	0.93	0.56	0.64	0.72	0.78	0.50	0.58	0.65	0.72	0.36	0.43	0.50	0.56	
		PI	3.18	3.19	3.19	3.18	3.18	3.18	3.18	3.18	3.19	3.19	3.19	3.19	3.19	3.19	3.19	3.19	
	5	TC	14.38	14.37	14.37	14.51	15.20	15.53	15.53	15.53	15.61	15.61	15.61	15.61	16.70	16.70	16.70	16.70	
		S/T	0.70	0.78	0.86	0.94	0.56	0.64	0.72	0.79	0.50	0.58	0.65	0.72	0.36	0.43	0.50	0.56	
		PI	3.21	3.22	3.22	3.21	3.21	3.21	3.21	3.21	3.21	3.21	3.21	3.21	3.22	3.22	3.22	3.22	
	10	TC	14.29	14.28	14.28	14.43	15.13	15.45	15.45	15.45	15.54	15.54	15.54	15.54	16.66	16.66	16.66	16.66	
		S/T	0.70	0.78	0.86	0.94	0.56	0.64	0.72	0.79	0.50	0.58	0.65	0.72	0.37	0.44	0.50	0.56	
		PI	3.27	3.27	3.27	3.27	3.26	3.26	3.26	3.26	3.26	3.26	3.26	3.26	3.26	3.26	3.26	3.26	
	15	TC	14.18	14.16	14.16	14.31	15.02	15.35	15.35	15.35	15.45	15.45	15.45	15.45	16.59	16.59	16.59	16.59	
		S/T	0.71	0.79	0.87	0.95	0.57	0.65	0.73	0.80	0.51	0.59	0.66	0.73	0.37	0.44	0.51	0.57	
		PI	3.35	3.35	3.35	3.35	3.33	3.33	3.33	3.33	3.34	3.34	3.34	3.34	3.33	3.33	3.33	3.33	
	20	TC	14.02	14.00	14.00	14.15	14.87	14.87	14.87	14.87	15.30	15.30	15.30	15.30	16.44	16.44	16.44	16.44	
		S/T	0.71	0.79	0.87	0.95	0.57	0.65	0.73	0.80	0.51	0.59	0.66	0.73	0.37	0.44	0.51	0.57	
		PI	3.46	3.47	3.47	3.46	3.45	3.45	3.45	3.45	3.45	3.45	3.45	3.45	3.43	3.43	3.43	3.43	
	25	TC	13.37	13.37	13.37	13.52	14.21	14.21	14.21	14.21	14.64	14.64	14.64	14.64	15.73	15.73	15.73	15.73	
		S/T	0.72	0.80	0.88	0.96	0.58	0.66	0.74	0.82	0.51	0.59	0.67	0.74	0.37	0.44	0.51	0.58	
		PI	3.82	3.82	3.82	3.82	3.82	3.82	3.82	3.82	3.81	3.81	3.81	3.81	3.82	3.82	3.82	3.82	
	30	TC	12.74	12.74	12.86	12.97	13.55	13.55	13.55	13.55	13.95	13.95	13.95	13.95	15.04	15.04	15.04	15.04	
		S/T	0.72	0.81	0.90	0.98	0.58	0.66	0.75	0.83	0.51	0.60	0.68	0.76	0.36	0.44	0.51	0.59	
		PI	4.18	4.18	4.18	4.18	4.19	4.19	4.19	4.19	4.19	4.19	4.19	4.19	4.21	4.21	4.21	4.21	
	35	TC	12.11	12.11	12.23	12.34	12.89	12.89	12.89	12.89	13.29	13.29	13.49	13.29	14.32	14.32	14.32	14.32	
		S/T	0.73	0.83	0.92	1.00	0.59	0.67	0.76	0.85	0.52	0.60	0.68	0.77	0.36	0.44	0.51	0.59	
		PI	4.57	4.57	4.57	4.57	4.58	4.58	4.58	4.58	4.59	4.59	4.60	4.59	4.62	4.62	4.62	4.62	
	40	TC	11.40	11.40	11.51	11.62	12.13	12.13	12.13	12.18	12.52	12.52	12.63	12.52	13.52	13.52	13.52	13.52	
		S/T	0.76	0.86	0.96	1.00	0.60	0.69	0.79	0.88	0.52	0.61	0.71	0.80	0.35	0.44	0.52	0.61	
		PI	5.05	5.05	5.05	5.05	5.06	5.06	5.06	5.06	5.08	5.08	5.08	5.08	5.11	5.11	5.11	5.11	
	46	TC	10.55	10.55	10.67	10.78	11.24	11.24	11.24	11.35	11.61	11.61	11.61	11.61	12.59	12.59	12.59	12.59	
		S/T	0.77	0.87	0.97	1.00	0.60	0.70	0.80	0.90	0.52	0.62	0.72	0.81	0.35	0.44	0.53	0.62	
		PI	5.61	5.61	5.61	5.61	5.63	5.63	5.63	5.63	5.65	5.65	5.65	5.65	5.70	5.70	5.70	5.70	
	50	TC	9.89	9.98	10.06	10.18	10.58	10.58	10.58	10.69	10.92	10.92	10.92	10.92	11.84	11.84	11.84	11.84	
		S/T	0.78	0.89	1.00	1.00	0.61	0.71	0.82	0.92	0.53	0.63	0.73	0.84	0.34	0.44	0.53	0.63	
		PI	6.07	6.07	6.07	6.07	6.10	6.10	6.10	6.10	6.12	6.12	6.12	6.12	6.17	6.17	6.17	6.17	
2040	-15	TC	15.02	15.02	15.17	15.33	15.79	15.79	15.79	15.79	16.17	16.17	16.17	16.17	17.19	17.19	17.19	17.19	
		S/T	0.71	0.81	0.98	1.00	0.57	0.66	0.74	0.83	0.50	0.59	0.67	0.75	0.35	0.42	0.50	0.58	
		PI	3.26	3.26	3.26	3.26	3.25	3.25	3.25	3.25	3.25	3.25	3.25	3.25	3.24	3.24	3.24	3.24	
	-10	TC	14.94	14.94	15.08	15.23	15.71	15.71	15.71	15.71	16.09	16.09	16.09	16.09	17.13	17.13	17.13	17.13	
		S/T	0.72	0.82	0.99	1.00	0.57	0.66	0.75	0.83	0.50	0.59	0.67	0.76	0.35	0.43	0.50	0.58	
		PI	3.24	3.24	3.24	3.24	3.25	3.25	3.25	3.25	3.24	3.24	3.24	3.24	3.24	3.24	3.24	3.24	
	-5	TC	14.85	14.85	14.99	15.14	15.65	15.65	15.65	15.65	16.03	16.03	16.03	16.03	17.09	17.09	17.09	17.09	
		S/T	0.72	0.82	0.99	1.00	0.58	0.66	0.75	0.84	0.51	0.59	0.67	0.76	0.35	0.43	0.51	0.59	
		PI	3.24	3.24	3.24	3.24	3.24	3.24	3.24	3.24	3.24	3.24	3.24	3.24	3.25	3.25	3.25	3.25	
	0	TC	14.77	14.77	14.92	15.07	15.59	15.59	15.59	15.59	15.99	15.99	15.99	15.99	17.07	17.07	17.07	17.07	
		S/T	0.73	0.82	1.00	1.00	0.58	0.67	0.75	0.84	0.51	0.60	0.68	0.76	0.35	0.43	0.51	0.59	
		PI	3.25	3.25	3.25	3.25	3.25	3.25	3.25	3.25	3.25	3.25	3.25	3.25	3.26	3.26	3.26	3.26	
	5	TC	14.70	14.70	14.84	14.99	15.53	15.53	15.53	15.53	15.94	15.94	15.94	15.94	17.06	17.06	17.06	17.06	
		S/T	0.73	0.83	1.00	1.00	0.58	0.67	0.76	0.85	0.51	0.60	0.68	0.77	0.35	0.43	0.51	0.59	
		PI	3.28	3.28	3.28	3.28	3.28	3.28	3.28	3.28	3.28	3.28	3.28	3.28	3.28	3.28	3.28	3.28	
	10	TC	14.61	14.61	14.75	14.90	15.45	15.45	15.45	15.45	15.87	15.87	15.87	15.87	17.01	17.01	17.01	17.01	
		S/T	0.73	0.83	1.00	1.00	0.58	0.67	0.76	0.85	0.51	0.60	0.68	0.77	0.36	0.44	0.51	0.59	
		PI	3.34	3.34	3.34	3.34	3.33	3.33	3.33	3.33	3.33	3.33	3.33	3.33	3.32	3.32	3.32	3.32	
	15	TC	14.49	14.49	14.63	14.78	15.35	15.35	15.35	15.35	15.77	15.77	15.77	15.77	16.94	16.94	16.94	16.94	
		S/T	0.74	0.84	0.93	1.00	0.59	0.68	0.77	0.86	0.52	0.61	0.69	0.78	0.36	0.44	0.52	0.60	
		PI	3.42	3.42	3.42	3.42	3.41	3.41	3.41	3.41	3.40	3.40	3.40	3.40	3.40	3.40	3.40	3.40	
	20	TC	14.33	14.33	14.47	14.61	15.19	15.19	15.19	15.19	15.62	15.62	15.62	15.62	16.80	16.80	16.80	16.80	
		S/T	0.74	0.84	0.93	1.00	0.59	0.68	0.77	0.86	0.52	0.61	0.69	0.78	0.36	0.44	0.52	0.60	
		PI	3.54	3.54	3.54	3.54	3.53	3.53	3.53	3.53	3.52	3.52	3.52	3.52	3.50	3.50	3.50	3.50	
	25	TC	13.67	13.67	13.81	13.95	14.50	14.50	14.50	14.50	14.93	14.93	14.93	14.93	16.08	16.08	16.08	16.08	
		S/T	0.75	0.85	0.95	1.00	0.59	0.69	0.78	0.88	0.52	0.61	0.70	0.80	0.35	0.44	0.52	0.61	
		PI	3.90	3.90	3.90	3.90	3.90	3.90	3.90	3.90	3.90	3.90	3.90	3.90	3.90	3.90	3.90	3.90	
	30	TC	13.01	13.01	13.15	13.29	13.84	13.84	13.84	13.98	14.27	14.27	14.27	14.27	15.36	15.36	15.36	15.36	
		S/T	0.76	0.87	0.97	1.00	0.60	0.70	0.80	0.89	0.52	0.62	0.71	0.81	0.35	0.44	0.53	0.62	
		PI	4.27	4.27	4.27	4.27	4.28	4.28	4.28	4.28	4.28	4.28	4.28	4.28	4.30	4.30	4.30	4.30	
	35	TC	12.37	12.49	12.60	12.72	13.15	13.15	13.15	13.29	13.58	13.58	13.78	13.58	14.64	14.64	14.64	14.64	
		S/T	0.78	0.88	0.99	1.00	0.61	0.71	0.81	0.91	0.53	0.63	0.72	0.83	0.35	0.44	0.53	0.63	
		PI	4.67	4.67	4.67	4.67	4.68	4.68	4.68	4.68	4.69	4.69	4.70	4.69	4.69	4.69	4.69	4.69	
	40	TC	11.55	11.66	11.78	11.89	12.31	12.31	12.31	12.44	12.71	12.71	12.82	12.71	13.72	13.72	13.72	13.72	
		S/T	0.80	0.92	1.00	1.00	0.62	0.73	0.85	0.96	0.53	0.64	0.76	0.87	0.34	0.44	0.54	0.65	
		PI	5.16	5.16	5.16	5.16	5.17	5.17	5.17	5.17	5.18	5.18	5.19	5.18	5.21	5.21	5.21	5.21	
	46	TC	10.68	10.79	10.91	11.02	11.42	11.42	11.42	11.54	11.79	11.79	11.79	11.79	12.76	12.76	12.76	12.76	
		S/T	0.82	0.94	1.00	1.00	0.63	0.74	0.86	0.98	0.54	0.65	0.77	0.88	0.34	0.44	0.55	0.66	
		PI	5.73	5.73	5.73	5.73	5.76	5.76	5.76	5.76	5.77	5.77	5.77	5.77	5.82	5.82	5.82	5.82	
	50	TC	10.03	10.14	10.25	10.37	10.74	10.74	10.85	10.97	11.08	11.08	11.08	11.19	12.02	12.02	12.02	12.02	
		S/T	0.84	0.97	1.00	1.00	0.64	0.76	0.89	1.00	0.54	0.67	0.79	0.91	0.33	0.45	0.56	0.91	
		PI	6.21	6.21	6.21	6.21	6.23	6.23	6.23	6.23	6.25	6.25	6.25	6.25	6.30	6.30	6.30	6.30	

2400	-15	TC	15.33	15.33	15.48	15.63	16.12	16.12	16.12	16.27	16.53	16.53	16.53	16.53	17.54	17.54	17.54	17.54
		S/T	0.74	0.85	1.00	1.00	0.59	0.69	0.78	0.98	0.51	0.61	0.70	0.80	0.34	0.42	0.51	0.61
		PI	3.33	3.33	3.33	3.33	3.32	3.32	3.32	3.32	3.32	3.32	3.32	3.32	3.31	3.31	3.31	3.31
	-10	TC	15.23	15.23	15.38	15.53	16.03	16.03	16.03	16.18	16.45	16.45	16.45	16.45	17.48	17.48	17.48	17.48
		S/T	0.75	0.85	1.00	1.00	0.59	0.69	0.79	0.98	0.51	0.61	0.71	0.81	0.34	0.43	0.51	0.61
		PI	3.31	3.31	3.31	3.31	3.31	3.31	3.31	3.31	3.31	3.31	3.31	3.31	3.31	3.31	3.31	3.31
	-5	TC	15.14	15.14	15.29	15.44	15.97	15.97	15.97	16.12	16.38	16.38	16.38	16.38	17.44	17.44	17.44	17.44
		S/T	0.75	0.86	1.00	1.00	0.59	0.69	0.79	0.99	0.52	0.61	0.71	0.81	0.34	0.43	0.52	0.61
		PI	3.31	3.31	3.31	3.31	3.30	3.30	3.30	3.30	3.31	3.31	3.31	3.31	3.32	3.32	3.32	3.32
	0	TC	15.07	15.07	15.22	15.36	15.91	15.91	15.91	16.06	16.34	16.34	16.34	16.34	17.42	17.42	17.42	17.42
		S/T	0.75	0.86	1.00	1.00	0.60	0.70	0.79	0.99	0.52	0.62	0.72	0.81	0.34	0.43	0.52	0.62
		PI	3.32	3.32	3.32	3.32	3.32	3.32	3.32	3.32	3.33	3.33	3.33	3.33	3.33	3.33	3.33	3.33
	5	TC	14.99	14.99	15.14	15.29	15.85	15.85	15.85	16.00	16.29	16.29	16.29	16.29	17.41	17.41	17.41	17.41
		S/T	0.76	0.87	1.00	1.00	0.60	0.70	0.80	1.00	0.52	0.62	0.72	0.82	0.34	0.43	0.52	0.62
		PI	3.35	3.35	3.35	3.35	3.35	3.35	3.35	3.35	3.35	3.35	3.35	3.35	3.36	3.36	3.36	3.36
	10	TC	14.90	14.90	15.05	15.19	15.78	15.78	15.78	15.92	16.22	16.22	16.22	16.22	17.36	17.36	17.36	17.36
		S/T	0.76	0.87	1.00	1.00	0.60	0.70	0.80	1.00	0.52	0.62	0.72	0.82	0.35	0.44	0.52	0.62
		PI	3.41	3.41	3.41	3.41	3.40	3.40	3.40	3.40	3.40	3.40	3.40	3.40	3.40	3.40	3.40	3.40
	15	TC	14.78	14.78	14.93	15.07	15.67	15.67	15.67	15.81	16.12	16.12	16.12	16.12	17.29	17.29	17.29	17.29
		S/T	0.77	0.88	0.99	1.00	0.61	0.71	0.81	0.91	0.53	0.63	0.73	0.83	0.35	0.44	0.53	0.63
		PI	3.49	3.49	3.49	3.49	3.48	3.48	3.48	3.48	3.48	3.48	3.48	3.48	3.47	3.47	3.47	3.47
	20	TC	14.61	14.61	14.76	14.90	15.50	15.50	15.50	15.65	15.96	15.96	15.96	15.96	17.14	17.14	17.14	17.14
		S/T	0.77	0.88	0.99	1.00	0.61	0.71	0.81	0.91	0.53	0.63	0.73	0.83	0.35	0.44	0.53	0.63
		PI	3.61	3.61	3.61	3.61	3.60	3.60	3.60	3.60	3.60	3.60	3.60	3.60	3.58	3.58	3.58	3.58
	25	TC	13.95	14.10	14.24	14.38	14.81	14.81	14.81	14.96	15.25	15.25	15.25	15.25	16.42	16.42	16.42	16.42
		S/T	0.79	0.90	1.00	1.00	0.61	0.72	0.83	0.93	0.53	0.64	0.74	0.85	0.34	0.44	0.54	0.64
		PI	3.98	3.98	3.98	3.98	3.98	3.98	3.98	3.98	3.98	3.98	3.98	3.98	3.98	3.98	3.98	3.98
	30	TC	13.29	13.44	13.58	13.72	14.13	14.13	14.13	14.27	14.56	14.56	14.56	14.56	15.68	15.68	15.68	15.68
		S/T	0.80	0.92	1.00	1.00	0.62	0.73	0.85	0.96	0.53	0.64	0.76	0.87	0.34	0.44	0.54	0.65
		PI	4.36	4.36	4.36	4.36	4.37	4.37	4.37	4.37	4.37	4.37	4.37	4.37	4.39	4.39	4.39	4.39
	35	TC	12.63	12.75	12.86	12.98	13.44	13.44	13.44	13.58	13.87	13.87	**14.07**	14.21	14.96	14.96	14.96	14.96
		S/T	0.82	0.94	1.00	1.00	0.63	0.75	0.87	0.98	0.54	0.65	**0.77**	0.88	0.34	0.44	0.55	0.66
		PI	4.77	4.77	4.77	4.77	4.78	4.78	4.78	4.78	4.79	4.79	**4.80**	4.79	4.82	4.82	4.82	4.82
	40	TC	11.79	11.91	12.02	12.14	12.57	12.57	12.62	12.75	12.97	12.97	13.08	13.21	14.01	14.01	14.01	14.01
		S/T	0.85	0.99	1.00	1.00	0.64	0.78	0.90	1.00	0.55	0.68	0.80	0.93	0.33	0.45	0.57	0.90
		PI	5.26	5.26	5.26	5.26	5.28	5.28	5.28	5.28	5.29	5.29	5.30	5.29	5.33	5.33	5.33	5.33
	46	TC	10.91	11.02	11.14	11.25	11.65	11.65	11.76	11.88	12.02	12.02	12.02	12.13	13.02	13.02	13.02	13.02
		S/T	0.87	1.00	1.00	1.00	0.65	0.79	0.92	1.00	0.55	0.69	0.82	0.95	0.33	0.45	0.57	0.92
		PI	5.85	5.85	5.85	5.85	5.88	5.88	5.88	5.88	5.89	5.89	5.89	5.89	5.94	5.94	5.94	5.94
	50	TC	10.25	10.37	10.48	10.60	10.97	10.97	11.08	11.19	11.31	11.31	11.31	11.42	12.28	12.28	12.28	12.28
		S/T	0.89	1.00	1.00	1.00	0.67	0.81	0.95	1.00	0.56	0.70	0.85	0.98	0.33	0.46	0.59	0.97
		PI	6.34	6.34	6.34	6.34	6.36	6.36	6.36	6.36	6.38	6.38	6.38	6.38	6.43	6.43	6.43	6.43

TC:Total Cooling Capacity (kW)

S/T:Sensible Cooling Capacity Ratio

PI:Power Input(kW)

Note: The table shows the case where the operation frequency of a compressor is fixed.

MTI-55HWFNX-QRD0W(GA)+MOE30U-55HFN8-RRD0W(GA)																		
INDOOR AIRFLOW (CMH)	OUTDOOR DB(℃)	ID WB (℃)	16.0				18.0				19.0				22.0			
		ID DB (℃)	23.0	25.0	27.0	29.0	23.0	25.0	27.0	29.0	23.0	25.0	27.0	29.0	23.0	25.0	27.0	29.0
1820	-15	TC	15.98	15.98	15.98	16.13	16.80	17.13	17.13	17.13	17.20	17.20	17.20	17.20	18.27	18.27	18.27	18.27
		S/T	0.69	0.76	0.84	0.91	0.55	0.63	0.70	0.77	0.49	0.57	0.64	0.70	0.36	0.42	0.49	0.55
		PI	3.50	3.51	3.51	3.50	3.49	3.49	3.49	3.49	3.49	3.49	3.49	3.49	3.48	3.48	3.48	3.48
	-10	TC	15.88	15.88	15.88	16.03	16.71	17.04	17.04	17.04	17.12	17.12	17.12	17.12	18.21	18.21	18.21	18.21
		S/T	0.69	0.77	0.84	0.91	0.55	0.63	0.71	0.78	0.49	0.57	0.64	0.71	0.36	0.43	0.49	0.55
		PI	3.49	3.49	3.49	3.49	3.48	3.48	3.48	3.48	3.48	3.48	3.48	3.48	3.48	3.48	3.48	3.48
	-5	TC	15.79	15.79	15.79	15.94	16.64	16.97	16.97	16.97	17.05	17.05	17.05	17.05	18.16	18.16	18.16	18.16
		S/T	0.69	0.77	0.85	0.92	0.56	0.63	0.71	0.78	0.50	0.58	0.64	0.71	0.36	0.43	0.50	0.56
		PI	3.48	3.49	3.49	3.48	3.48	3.48	3.48	3.48	3.48	3.48	3.48	3.48	3.49	3.49	3.49	3.49
	0	TC	15.71	15.71	15.71	15.86	16.58	16.91	16.91	16.91	17.01	17.01	17.01	17.01	18.14	18.14	18.14	18.14
		S/T	0.70	0.77	0.85	0.92	0.56	0.64	0.72	0.78	0.50	0.58	0.65	0.72	0.36	0.43	0.50	0.56
		PI	3.50	3.50	3.50	3.50	3.49	3.49	3.49	3.49	3.49	3.49	3.49	3.49	3.50	3.50	3.50	3.50
	5	TC	15.63	15.63	15.63	15.78	16.52	16.85	16.85	16.85	16.95	16.95	16.95	16.95	18.13	18.13	18.13	18.13
		S/T	0.70	0.78	0.86	0.93	0.56	0.64	0.72	0.79	0.50	0.58	0.65	0.72	0.36	0.43	0.50	0.56
		PI	3.53	3.53	3.53	3.53	3.52	3.52	3.52	3.52	3.52	3.52	3.52	3.52	3.53	3.53	3.53	3.53
	10	TC	15.53	15.53	15.53	15.68	16.44	16.77	16.77	16.77	16.88	16.88	16.88	16.88	18.08	18.08	18.08	18.08
		S/T	0.70	0.78	0.86	0.93	0.56	0.64	0.72	0.79	0.50	0.58	0.65	0.72	0.37	0.44	0.50	0.56
		PI	3.59	3.59	3.59	3.59	3.58	3.58	3.58	3.58	3.58	3.58	3.58	3.58	3.57	3.57	3.57	3.57
	15	TC	15.41	15.41	15.41	15.55	16.33	16.65	16.65	16.65	16.78	16.78	16.78	16.78	18.01	18.01	18.01	18.01
		S/T	0.71	0.79	0.87	0.94	0.57	0.65	0.73	0.80	0.51	0.59	0.66	0.73	0.37	0.44	0.51	0.57
		PI	3.67	3.68	3.68	3.67	3.66	3.66	3.66	3.66	3.66	3.66	3.66	3.66	3.65	3.65	3.65	3.65
	20	TC	15.23	15.23	15.23	15.38	16.15	16.15	16.15	16.15	16.61	16.61	16.61	16.61	17.85	17.85	17.85	17.85
		S/T	0.71	0.79	0.87	0.94	0.57	0.65	0.73	0.80	0.51	0.59	0.66	0.73	0.37	0.44	0.51	0.57
		PI	3.80	3.81	3.81	3.80	3.79	3.79	3.79	3.79	3.78	3.78	3.78	3.78	3.76	3.76	3.76	3.76
	25	TC	14.54	14.54	14.54	14.69	15.44	15.44	15.44	15.44	15.90	15.90	15.90	15.90	17.10	17.10	17.10	17.10
		S/T	0.72	0.80	0.88	0.96	0.58	0.66	0.74	0.81	0.51	0.59	0.67	0.74	0.37	0.44	0.51	0.58
		PI	4.19	4.19	4.19	4.19	4.19	4.19	4.19	4.19	4.19	4.19	4.19	4.19	4.19	4.19	4.19	4.19
	30	TC	13.85	13.85	14.00	14.14	14.72	14.72	14.72	14.72	15.18	15.18	15.18	15.18	16.36	16.36	16.36	16.36
		S/T	0.72	0.81	0.90	0.98	0.58	0.66	0.75	0.83	0.51	0.59	0.68	0.76	0.36	0.44	0.51	0.59
		PI	4.59	4.59	4.59	4.59	4.60	4.60	4.60	4.60	4.60	4.60	4.60	4.60	4.62	4.62	4.62	4.62
	35	TC	13.17	13.17	13.31	13.45	14.00	14.00	14.00	14.00	14.43	14.43	14.66	14.43	15.58	15.58	15.58	15.58
		S/T	0.73	0.83	0.92	1.00	0.59	0.67	0.76	0.85	0.52	0.60	0.68	0.77	0.36	0.44	0.51	0.59
		PI	5.01	5.01	5.01	5.01	5.03	5.03	5.03	5.03	5.04	5.04	5.05	5.04	5.08	5.08	5.08	5.08
	40	TC	12.41	12.41	12.54	12.67	13.22	13.22	13.22	13.27	13.64	13.64	13.76	13.64	14.74	14.74	14.74	14.74
		S/T	0.76	0.86	0.96	1.00	0.60	0.69	0.79	0.88	0.52	0.61	0.71	0.80	0.35	0.44	0.52	0.61
		PI	5.54	5.54	5.54	5.54	5.56	5.56	5.56	5.56	5.57	5.57	5.58	5.57	5.61	5.61	5.61	5.61
	46	TC	11.49	11.49	11.60	11.72	12.26	12.26	12.26	12.38	12.67	12.67	12.67	12.67	13.70	13.70	13.70	13.70
		S/T	0.77	0.87	0.97	1.00	0.60	0.70	0.80	0.90	0.52	0.62	0.72	0.81	0.35	0.44	0.53	0.62
		PI	6.16	6.16	6.16	6.16	6.18	6.18	6.18	6.18	6.20	6.20	6.20	6.20	6.25	6.25	6.25	6.25
	50	TC	10.77	10.88	11.00	11.11	11.51	11.51	11.51	11.63	11.92	11.92	11.92	11.92	12.90	12.90	12.90	12.90
		S/T	0.78	0.89	1.00	1.00	0.61	0.71	0.82	0.92	0.53	0.63	0.73	0.84	0.34	0.44	0.53	0.63
		PI	6.67	6.67	6.67	6.67	6.70	6.70	6.70	6.70	6.71	6.71	6.71	6.71	6.77	6.77	6.77	6.77
2210	-15	TC	16.28	16.28	16.43	16.59	17.13	17.13	17.13	17.13	17.57	17.57	17.57	17.57	18.66	18.66	18.66	18.66
		S/T	0.71	0.81	0.98	1.00	0.57	0.66	0.74	0.83	0.50	0.59	0.67	0.75	0.35	0.42	0.50	0.58
		PI	3.57	3.57	3.57	3.57	3.55	3.55	3.55	3.55	3.55	3.55	3.55	3.55	3.55	3.55	3.55	3.55
	-10	TC	16.19	16.19	16.34	16.49	17.04	17.04	17.04	17.04	17.48	17.48	17.48	17.48	18.59	18.59	18.59	18.59
		S/T	0.72	0.82	0.99	1.00	0.57	0.66	0.75	0.83	0.50	0.59	0.67	0.76	0.35	0.43	0.50	0.58
		PI	3.55	3.55	3.55	3.55	3.54	3.54	3.54	3.54	3.55	3.55	3.55	3.55	3.55	3.55	3.55	3.55
	-5	TC	16.09	16.09	16.24	16.39	16.97	16.97	16.97	16.97	17.41	17.41	17.41	17.41	18.55	18.55	18.55	18.55
		S/T	0.72	0.82	0.99	1.00	0.58	0.66	0.75	0.84	0.51	0.59	0.67	0.76	0.35	0.43	0.51	0.59
		PI	3.54	3.54	3.54	3.54	3.54	3.54	3.54	3.54	3.55	3.55	3.55	3.55	3.55	3.55	3.55	3.55
	0	TC	16.01	16.01	16.16	16.31	16.91	16.91	16.91	16.91	17.37	17.37	17.37	17.37	18.53	18.53	18.53	18.53
		S/T	0.73	0.82	1.00	1.00	0.58	0.67	0.75	0.84	0.51	0.60	0.68	0.76	0.35	0.43	0.51	0.59
		PI	3.56	3.56	3.56	3.56	3.55	3.55	3.55	3.55	3.56	3.56	3.56	3.56	3.57	3.57	3.57	3.57
	5	TC	15.93	15.93	16.08	16.23	16.85	16.85	16.85	16.85	17.31	17.31	17.31	17.31	18.52	18.52	18.52	18.52
		S/T	0.73	0.83	1.00	1.00	0.58	0.67	0.76	0.85	0.51	0.60	0.68	0.77	0.35	0.43	0.51	0.59
		PI	3.59	3.59	3.59	3.59	3.58	3.58	3.58	3.58	3.59	3.59	3.59	3.59	3.59	3.59	3.59	3.59
	10	TC	15.83	15.83	15.98	16.13	16.77	16.77	16.77	16.77	17.24	17.24	17.24	17.24	18.47	18.47	18.47	18.47
		S/T	0.73	0.83	1.00	1.00	0.58	0.67	0.76	0.85	0.51	0.60	0.68	0.77	0.36	0.44	0.51	0.59
		PI	3.65	3.65	3.65	3.65	3.64	3.64	3.64	3.64	3.64	3.64	3.64	3.64	3.64	3.64	3.64	3.64
	15	TC	15.70	15.70	15.85	16.00	16.65	16.65	16.65	16.65	17.13	17.13	17.13	17.13	18.39	18.39	18.39	18.39
		S/T	0.74	0.84	0.93	1.00	0.59	0.68	0.77	0.86	0.52	0.61	0.69	0.78	0.36	0.44	0.52	0.60
		PI	3.74	3.74	3.74	3.74	3.72	3.72	3.72	3.72	3.73	3.73	3.73	3.73	3.72	3.72	3.72	3.72
	20	TC	15.53	15.53	15.67	15.82	16.48	16.48	16.48	16.48	16.97	16.97	16.97	16.97	18.23	18.23	18.23	18.23
		S/T	0.74	0.84	0.93	1.00	0.59	0.68	0.77	0.86	0.52	0.61	0.69	0.78	0.36	0.44	0.52	0.60
		PI	3.87	3.87	3.87	3.87	3.85	3.85	3.85	3.85	3.85	3.85	3.85	3.85	3.83	3.83	3.83	3.83
	25	TC	14.81	14.81	14.95	15.10	15.73	15.73	15.73	15.73	16.22	16.22	16.22	16.22	17.45	17.45	17.45	17.45
		S/T	0.75	0.85	0.95	1.00	0.59	0.69	0.78	0.88	0.52	0.61	0.70	0.79	0.35	0.44	0.52	0.61
		PI	4.26	4.26	4.26	4.26	4.26	4.26	4.26	4.26	4.26	4.26	4.26	4.26	4.26	4.26	4.26	4.26
	30	TC	14.12	14.12	14.26	14.41	15.01	15.01	15.01	15.15	15.47	15.47	15.47	15.47	16.68	16.68	16.68	16.68
		S/T	0.76	0.87	0.97	1.00	0.60	0.70	0.80	0.89	0.52	0.62	0.71	0.81	0.35	0.44	0.53	0.62
		PI	4.67	4.67	4.67	4.67	4.68	4.68	4.68	4.68	4.68	4.68	4.68	4.68	4.70	4.70	4.70	4.70
	35	TC	13.40	13.54	13.69	13.83	14.29	14.29	14.29	14.44	14.72	14.72	14.95	14.72	15.87	15.87	15.87	15.87
		S/T	0.78	0.88	0.99	1.00	0.61	0.71	0.81	0.91	0.53	0.63	0.72	0.83	0.35	0.44	0.53	0.63
		PI	5.10	5.10	5.10	5.10	5.12	5.12	5.12	5.12	5.13	5.13	5.14	5.13	5.13	5.13	5.13	5.13
	40	TC	12.48	12.61	12.74	12.87	13.31	13.31	13.31	13.44	13.72	13.72	13.85	13.72	14.82	14.82	14.82	14.82
		S/T	0.80	0.92	1.00	1.00	0.62	0.73	0.85	0.96	0.53	0.64	0.76	0.87	0.34	0.44	0.54	0.65
		PI	5.63	5.63	5.63	5.63	5.65	5.65	5.65	5.65	5.66	5.66	5.67	5.66	5.69	5.69	5.69	5.69
	46	TC	11.57	11.68	11.79	11.91	12.33	12.33	12.33	12.45	12.73	12.73	12.73	12.73	13.78	13.78	13.78	13.78
		S/T	0.82	0.94	1.00	1.00	0.63	0.75	0.86	0.98	0.54	0.65	0.77	0.88	0.34	0.44	0.55	0.66
		PI	6.26	6.26	6.26	6.26	6.29	6.29	6.29	6.29	6.30	6.30	6.30	6.30	6.36	6.36	6.36	6.36
	50	TC	10.86	10.97	11.08	11.20	11.60	11.60	11.71	11.82	11.99	11.99	11.99	12.11	12.99	12.99	12.99	12.99
		S/T	0.84	0.97	1.00	1.00	0.64	0.76	0.89	1.00	0.54	0.67	0.79	0.91	0.33	0.45	0.56	0.91
		PI	6.78	6.78	6.78	6.78	6.81	6.81	6.81	6.81	6.83	6.83	6.83	6.83	6.88	6.88	6.88	6.88

2600	-15	TC	16.62	16.62	16.80	16.98	17.46	17.46	17.46	17.64	17.89	17.89	17.89	17.89	19.01	19.01	19.01	19.01
		S/T	0.74	0.85	1.00	1.00	0.59	0.69	0.78	0.98	0.51	0.61	0.70	0.80	0.34	0.42	0.51	0.61
		PI	3.64	3.64	3.64	3.64	3.63	3.63	3.63	3.63	3.63	3.63	3.63	3.63	3.62	3.62	3.62	3.62
	-10	TC	16.52	16.52	16.70	16.88	17.37	17.37	17.37	17.54	17.80	17.80	17.80	17.80	18.95	18.95	18.95	18.95
		S/T	0.75	0.85	1.00	1.00	0.59	0.69	0.79	0.98	0.51	0.61	0.71	0.81	0.34	0.43	0.51	0.61
		PI	3.62	3.62	3.62	3.62	3.62	3.62	3.62	3.62	3.62	3.62	3.62	3.62	3.62	3.62	3.62	3.62
	-5	TC	16.42	16.42	16.60	16.78	17.30	17.30	17.30	17.48	17.74	17.74	17.74	17.74	18.90	18.90	18.90	18.90
		S/T	0.75	0.86	1.00	1.00	0.59	0.69	0.79	0.99	0.52	0.61	0.71	0.81	0.34	0.43	0.52	0.61
		PI	3.61	3.61	3.61	3.61	3.62	3.62	3.62	3.62	3.62	3.62	3.62	3.62	3.63	3.63	3.63	3.63
	0	TC	16.34	16.34	16.51	16.69	17.23	17.23	17.23	17.41	17.69	17.69	17.69	17.69	18.88	18.88	18.88	18.88
		S/T	0.75	0.86	1.00	1.00	0.60	0.70	0.79	0.99	0.52	0.62	0.72	0.81	0.34	0.43	0.52	0.62
		PI	3.63	3.63	3.63	3.63	3.63	3.63	3.63	3.63	3.63	3.63	3.63	3.63	3.64	3.64	3.64	3.64
	5	TC	16.25	16.25	16.43	16.61	17.17	17.17	17.17	17.35	17.63	17.63	17.63	17.63	18.87	18.87	18.87	18.87
		S/T	0.76	0.87	1.00	1.00	0.60	0.70	0.80	1.00	0.52	0.62	0.72	0.82	0.34	0.43	0.52	0.62
		PI	3.66	3.66	3.66	3.66	3.66	3.66	3.66	3.66	3.66	3.66	3.66	3.66	3.67	3.67	3.67	3.67
	10	TC	16.16	16.16	16.33	16.51	17.09	17.09	17.09	17.26	17.56	17.56	17.56	17.56	18.82	18.82	18.82	18.82
		S/T	0.76	0.87	1.00	1.00	0.60	0.70	0.80	1.00	0.52	0.62	0.72	0.82	0.35	0.44	0.52	0.62
		PI	3.72	3.72	3.72	3.72	3.72	3.72	3.72	3.72	3.72	3.72	3.72	3.72	3.72	3.72	3.72	3.72
	15	TC	16.02	16.02	16.20	16.37	16.97	16.97	16.97	17.15	17.45	17.45	17.45	17.45	18.74	18.74	18.74	18.74
		S/T	0.77	0.88	0.99	1.00	0.61	0.71	0.81	0.91	0.53	0.63	0.73	0.83	0.35	0.44	0.53	0.63
		PI	3.81	3.81	3.81	3.81	3.81	3.81	3.81	3.81	3.80	3.80	3.80	3.80	3.79	3.79	3.79	3.79
	20	TC	15.84	15.84	16.02	16.19	16.79	16.79	16.79	16.97	17.28	17.28	17.28	17.28	18.58	18.58	18.58	18.58
		S/T	0.77	0.88	0.99	1.00	0.61	0.71	0.81	0.91	0.53	0.63	0.73	0.83	0.35	0.44	0.53	0.63
		PI	3.95	3.95	3.95	3.95	3.94	3.94	3.94	3.94	3.93	3.93	3.93	3.93	3.91	3.91	3.91	3.91
	25	TC	15.10	15.24	15.38	15.53	16.05	16.05	16.05	16.22	16.53	16.53	16.53	16.53	17.77	17.77	17.77	17.77
		S/T	0.79	0.90	1.00	1.00	0.61	0.72	0.83	0.93	0.53	0.64	0.74	0.85	0.34	0.44	0.54	0.64
		PI	4.35	4.35	4.35	4.35	4.35	4.35	4.35	4.35	4.35	4.35	4.35	4.35	4.35	4.35	4.35	4.35
	30	TC	14.41	14.55	14.69	14.84	15.30	15.30	15.30	15.44	15.79	15.79	15.79	15.79	16.99	16.99	16.99	16.99
		S/T	0.80	0.92	1.00	1.00	0.62	0.73	0.85	0.96	0.53	0.64	0.76	0.87	0.34	0.44	0.54	0.65
		PI	4.77	4.77	4.77	4.77	4.78	4.78	4.78	4.78	4.78	4.78	4.78	4.78	4.80	4.80	4.80	4.80
	35	TC	13.66	13.80	13.95	14.09	14.55	14.55	14.55	14.69	15.01	15.01	**15.24**	15.38	16.19	16.19	16.19	16.19
		S/T	0.82	0.94	1.00	1.00	0.63	0.75	0.87	0.98	0.54	0.66	**0.77**	0.88	0.34	0.44	0.55	0.66
		PI	5.21	5.21	5.21	5.21	5.23	5.23	5.23	5.23	5.24	5.24	**5.25**	5.24	5.28	5.28	5.28	5.28
	40	TC	12.72	12.85	12.98	13.11	13.57	13.57	13.62	13.75	14.00	14.00	14.12	14.26	15.12	15.12	15.12	15.12
		S/T	0.85	0.99	1.00	1.00	0.65	0.78	0.90	1.00	0.55	0.68	0.80	0.93	0.33	0.45	0.57	0.90
		PI	5.75	5.75	5.75	5.75	5.77	5.77	5.77	5.77	5.78	5.78	5.79	5.78	5.83	5.83	5.83	5.83
	46	TC	11.79	11.91	12.02	12.14	12.59	12.59	12.70	12.82	12.99	12.99	12.99	13.13	14.07	14.07	14.07	14.07
		S/T	0.87	1.00	1.00	1.00	0.65	0.79	0.92	1.00	0.55	0.69	0.82	0.95	0.33	0.45	0.57	0.92
		PI	6.39	6.39	6.39	6.39	6.42	6.42	6.42	6.42	6.44	6.44	6.44	6.44	6.49	6.49	6.49	6.49
	50	TC	11.06	11.17	11.28	11.40	11.82	11.82	11.94	12.05	12.22	12.22	12.22	12.33	13.24	13.24	13.24	13.24
		S/T	0.90	1.00	1.00	1.00	0.67	0.81	0.95	1.00	0.56	0.70	0.85	0.98	0.33	0.46	0.59	0.97
		PI	6.92	6.92	6.92	6.92	6.95	6.95	6.95	6.95	6.97	6.97	6.97	6.97	7.03	7.03	7.03	7.03

TC:Total Cooling Capacity (kW)

S/T:Sensible Cooling Capacity Ratio

PI:Power Input(kW)

Note: The table shows the case where the operation frequency of a compressor is fixed.

7.2 Heating

12k									[SI_Unit]
INDOOR AIRFLOW (CMH)	HEATING PERFORMANCE AT INDOOR DRY BULB TEMPERATURE								
	OUTDOOR DB(°C)	TC:TOTAL CAPACITY IN KILOWATTS (KW)				PI:TOTAL POWER IN KILOWATTS (KW)			
		Indoor Conditions (DB °C)				Indoor Conditions (DB °C)			
		16.0	20.0	22.0	24.0	16.0	20.0	22.0	24.0
300	-15.0	2.61	2.59	2.59	2.56	1.17	1.21	1.18	1.19
	-10.0	2.79	2.76	2.76	2.74	1.25	1.29	1.26	1.27
	-7.0	2.92	2.90	2.90	2.87	1.32	1.37	1.34	1.35
	-5.6	2.98	2.95	2.95	2.92	1.29	1.30	1.31	1.31
	-2.8	3.04	3.01	3.01	2.98	1.23	1.24	1.24	1.25
	0.0	3.07	3.04	3.01	3.01	1.17	1.17	1.18	1.18
	2.8	3.21	3.18	3.16	3.13	1.12	1.13	1.13	1.13
	5.6	3.45	3.42	3.39	3.36	1.07	1.07	1.08	1.08
	7.0	3.73	3.69	3.61	3.61	1.05	1.02	1.05	1.05
	11.1	3.90	3.84	3.81	3.78	0.96	0.96	0.96	0.96
	13.9	4.01	3.98	3.96	3.93	0.91	0.90	0.90	0.90
	16.7	4.16	4.10	4.07	4.04	0.85	0.84	0.84	0.83
	18.0	4.22	4.16	4.13	4.10	0.82	0.81	0.81	0.80
480	-15.0	2.66	2.63	2.63	2.61	1.18	1.22	1.20	1.20
	-10.0	2.84	2.81	2.81	2.78	1.25	1.30	1.28	1.28
	-7.0	2.97	2.95	2.95	2.92	1.33	1.38	1.36	1.36
	-5.6	3.04	3.01	3.01	2.98	1.30	1.31	1.32	1.33
	-2.8	3.13	3.07	3.07	3.04	1.24	1.25	1.25	1.26
	0.0	3.16	3.10	3.07	3.07	1.17	1.18	1.19	1.19
	2.8	3.27	3.24	3.21	3.18	1.13	1.14	1.14	1.14
	5.6	3.53	3.50	3.47	3.45	1.08	1.08	1.08	1.09
	7.0	3.81	3.78	3.69	3.69	1.06	1.03	1.06	1.06
	11.1	3.98	3.93	3.90	3.87	0.97	0.97	0.97	0.97
	13.9	4.13	4.07	4.04	4.01	0.91	0.91	0.91	0.90
	16.7	4.28	4.22	4.19	4.16	0.86	0.85	0.84	0.84
	18.0	4.33	4.28	4.25	4.22	0.83	0.82	0.81	0.81
600	-15.0	2.69	2.67	2.67	2.64	1.19	1.24	1.21	1.22
	-10.0	2.87	2.85	2.85	2.82	1.27	1.32	1.29	1.30
	-7.0	3.01	2.98	2.98	2.95	1.35	1.40	1.37	1.38
	-5.6	3.07	3.04	3.04	3.01	1.32	1.33	1.34	1.34
	-2.8	3.16	3.10	3.10	3.07	1.25	1.26	1.27	1.27
	0.0	3.18	3.13	3.13	3.10	1.19	1.20	1.20	1.20
	2.8	3.30	3.27	3.24	3.21	1.15	1.15	1.15	1.16
	5.6	3.56	3.53	3.50	3.47	1.09	1.10	1.10	1.10
	7.0	3.84	3.81	3.72	3.72	1.07	1.04	1.07	1.07
	11.1	4.01	3.96	3.93	3.90	0.98	0.98	0.98	0.98
	13.9	4.16	4.10	4.07	4.04	0.92	0.92	0.92	0.91
	16.7	4.30	4.25	4.22	4.16	0.87	0.86	0.85	0.85
	18.0	4.36	4.30	4.28	4.25	0.84	0.83	0.82	0.82

Note: The table shows the case where the operation frequency of a compressor is fixed.

18k								[SI_Unit]
INDOOR AIRFLOW (CMH)	HEATING PERFORMANCE AT INDOOR DRY BULB TEMPERATURE							
	OUTDOOR DB(°C)	TC:TOTAL CAPACITY IN KILOWATTS (KW)				PI:TOTAL POWER IN KILOWATTS (KW)			
		Indoor Conditions (DB °C)				Indoor Conditions (DB °C)			
		16.0	20.0	22.0	24.0	16.0	20.0	22.0	24.0
515	-15.0	3.93	3.87	3.85	3.82	1.45	1.50	1.49	1.50
	-10.0	4.19	4.14	4.11	4.08	1.55	1.60	1.59	1.60
	-7.0	4.39	4.33	4.31	4.28	1.64	1.70	1.69	1.70
	-5.6	4.48	4.42	4.39	4.36	1.62	1.65	1.66	1.67
	-2.8	4.54	4.48	4.45	4.45	1.57	1.60	1.61	1.63
	0.0	4.57	4.51	4.48	4.45	1.53	1.56	1.57	1.58
	2.8	4.74	4.68	4.65	4.63	1.51	1.53	1.54	1.55
	5.6	5.09	5.03	5.00	4.97	1.48	1.50	1.52	1.53
	7.0	5.46	5.39	5.31	5.25	1.46	1.47	1.49	1.50
	11.1	5.68	5.60	5.57	5.51	1.41	1.43	1.44	1.44
	13.9	5.86	5.77	5.74	5.68	1.37	1.39	1.40	1.41
	16.7	6.03	5.95	5.92	5.86	1.34	1.35	1.36	1.37
	18.0	6.12	6.03	6.00	5.95	1.32	1.33	1.34	1.35
706	-15.0	4.00	3.95	3.92	3.90	1.47	1.51	1.50	1.52
	-10.0	4.27	4.22	4.19	4.16	1.57	1.62	1.60	1.62
	-7.0	4.48	4.42	4.39	4.36	1.66	1.72	1.70	1.72
	-5.6	4.57	4.51	4.48	4.45	1.63	1.66	1.67	1.69
	-2.8	4.63	4.57	4.57	4.54	1.59	1.62	1.63	1.64
	0.0	4.65	4.60	4.57	4.54	1.55	1.57	1.58	1.60
	2.8	4.86	4.80	4.77	4.71	1.53	1.54	1.55	1.57
	5.6	5.21	5.15	5.12	5.06	1.50	1.52	1.53	1.54
	7.0	5.57	5.51	5.39	5.37	1.48	1.49	1.51	1.52
	11.1	5.80	5.71	5.68	5.63	1.43	1.45	1.46	1.47
	13.9	5.97	5.92	5.86	5.83	1.39	1.41	1.42	1.43
	16.7	6.18	6.09	6.03	6.00	1.36	1.37	1.38	1.39
	18.0	6.26	6.18	6.12	6.09	1.34	1.36	1.36	1.37
911	-15.0	4.03	3.98	3.95	3.93	1.48	1.53	1.52	1.53
	-10.0	4.30	4.25	4.22	4.19	1.58	1.63	1.62	1.63
	-7.0	4.51	4.45	4.42	4.39	1.67	1.73	1.72	1.73
	-5.6	4.60	4.54	4.51	4.48	1.65	1.68	1.69	1.71
	-2.8	4.68	4.63	4.60	4.57	1.61	1.63	1.65	1.66
	0.0	4.71	4.65	4.63	4.60	1.56	1.59	1.60	1.62
	2.8	4.89	4.83	4.80	4.77	1.54	1.56	1.57	1.59
	5.6	5.27	5.18	5.15	5.12	1.52	1.53	1.54	1.56
	7.0	5.66	5.57	5.45	5.42	1.50	1.51	1.53	1.54
	11.1	5.86	5.77	5.74	5.71	1.45	1.47	1.48	1.49
	13.9	6.06	5.97	5.92	5.89	1.41	1.43	1.44	1.45
	16.7	6.24	6.15	6.12	6.06	1.38	1.40	1.40	1.41
	18.0	6.35	6.24	6.21	6.15	1.36	1.38	1.39	1.39

Note: The table shows the case where the operation frequency of a compressor is fixed.

24k									[SI_Unit]
INDOOR AIRFLOW (CMH)	HEATING PERFORMANCE AT INDOOR DRY BULB TEMPERATURE								
	OUTDOOR DB(°C)	TC:TOTAL CAPACITY IN KILOWATTS (KW)				PI:TOTAL POWER IN KILOWATTS (KW)			
		Indoor Conditions (DB °C)				Indoor Conditions (DB °C)			
		16.0	20.0	22.0	24.0	16.0	20.0	22.0	24.0
825	-15.0	5.37	5.32	5.30	5.27	2.21	2.29	2.25	2.26
	-10.0	5.74	5.68	5.66	5.63	2.36	2.44	2.40	2.41
	-7.0	6.01	5.95	5.93	5.90	2.51	2.60	2.55	2.56
	-5.6	6.13	6.07	6.04	6.01	2.44	2.46	2.47	2.48
	-2.8	6.25	6.16	6.13	6.10	2.31	2.33	2.34	2.35
	0.0	6.27	6.19	6.16	6.10	2.19	2.20	2.20	2.21
	2.8	6.51	6.42	6.39	6.33	2.08	2.09	2.09	2.09
	5.6	6.97	6.88	6.86	6.80	1.97	1.97	1.97	1.97
	7.0	7.48	7.39	7.24	7.21	1.92	1.86	1.92	1.92
	11.1	7.77	7.65	7.62	7.56	1.75	1.74	1.73	1.73
	13.9	8.03	7.91	7.85	7.79	1.64	1.62	1.61	1.60
	16.7	8.26	8.14	8.08	8.03	1.52	1.50	1.49	1.47
	18.0	8.37	8.26	8.20	8.14	1.46	1.44	1.43	1.42
1035	-15.0	5.48	5.43	5.40	5.38	2.24	2.32	2.27	2.27
	-10.0	5.85	5.80	5.77	5.74	2.39	2.47	2.42	2.43
	-7.0	6.13	6.07	6.05	6.02	2.54	2.62	2.57	2.58
	-5.6	6.25	6.19	6.16	6.13	2.47	2.49	2.50	2.51
	-2.8	6.36	6.27	6.25	6.22	2.34	2.35	2.36	2.37
	0.0	6.39	6.30	6.27	6.22	2.21	2.22	2.23	2.23
	2.8	6.65	6.56	6.51	6.48	2.10	2.11	2.11	2.11
	5.6	7.12	7.03	6.97	6.94	2.00	2.00	1.99	1.99
	7.0	7.63	7.53	7.39	7.36	1.94	1.88	1.94	1.94
	11.1	7.91	7.82	7.77	7.71	1.77	1.76	1.75	1.75
	13.9	8.17	8.05	8.00	7.94	1.65	1.64	1.63	1.62
	16.7	8.43	8.32	8.26	8.17	1.54	1.51	1.50	1.49
	18.0	8.55	8.43	8.37	8.29	1.48	1.45	1.44	1.43
1229	-15.0	5.53	5.48	5.45	5.43	2.26	2.34	2.29	2.30
	-10.0	5.90	5.85	5.82	5.80	2.41	2.49	2.44	2.45
	-7.0	6.19	6.13	6.10	6.07	2.56	2.65	2.60	2.61
	-5.6	6.30	6.25	6.22	6.19	2.49	2.51	2.52	2.53
	-2.8	6.42	6.36	6.30	6.27	2.36	2.38	2.38	2.39
	0.0	6.45	6.36	6.33	6.30	2.23	2.24	2.25	2.25
	2.8	6.71	6.62	6.59	6.54	2.12	2.13	2.13	2.13
	5.6	7.20	7.12	7.06	7.00	2.02	2.02	2.02	2.02
	7.0	7.71	7.62	7.48	7.42	1.96	1.90	1.96	1.96
	11.1	8.00	7.91	7.85	7.79	1.79	1.78	1.77	1.77
	13.9	8.26	8.14	8.08	8.03	1.67	1.65	1.65	1.64
	16.7	8.52	8.40	8.34	8.29	1.55	1.53	1.52	1.51
	18.0	8.66	8.52	8.46	8.40	1.50	1.47	1.46	1.45

Note: The table shows the case where the operation frequency of a compressor is fixed.

30k									[SI_Unit]
INDOOR AIRFLOW (CMH)	HEATING PERFORMANCE AT INDOOR DRY BULB TEMPERATURE								
	OUTDOOR DB(°C)	TC:TOTAL CAPACITY IN KILOWATTS (KW)				PI:TOTAL POWER IN KILOWATTS (KW)			
		Indoor Conditions (DB °C)				Indoor Conditions (DB °C)			
		16.0	20.0	22.0	24.0	16.0	20.0	22.0	24.0
1500	-15.0	5.67	5.59	5.54	5.52	2.26	2.34	2.32	2.33
	-10.0	6.05	5.97	5.92	5.89	2.42	2.50	2.47	2.49
	-7.0	6.34	6.26	6.20	6.17	2.57	2.66	2.63	2.65
	-5.6	6.66	6.57	6.52	6.49	2.52	2.56	2.58	2.60
	-2.8	6.95	6.86	6.81	6.78	2.44	2.48	2.50	2.51
	0.0	7.15	7.07	7.01	6.98	2.36	2.39	2.41	2.42
	2.8	7.65	7.53	7.50	7.44	2.30	2.33	2.34	2.36
	5.6	8.40	8.28	8.22	8.17	2.24	2.27	2.28	2.29
	7.0	9.24	9.12	8.86	8.80	2.22	2.21	2.25	2.26
	11.1	9.76	9.64	9.55	9.49	2.11	2.13	2.14	2.15
	13.9	10.25	10.10	10.05	9.96	2.04	2.06	2.06	2.07
	16.7	10.71	10.57	10.51	10.42	1.97	1.98	1.99	1.99
	18.0	10.95	10.80	10.74	10.66	1.94	1.95	1.95	1.96
1800	-15.0	5.78	5.70	5.68	5.65	2.29	2.36	2.34	2.36
	-10.0	6.17	6.09	6.06	6.04	2.44	2.52	2.50	2.52
	-7.0	6.46	6.38	6.35	6.33	2.60	2.68	2.66	2.68
	-5.6	6.78	6.69	6.66	6.63	2.55	2.59	2.61	2.63
	-2.8	7.10	7.01	6.95	6.92	2.47	2.50	2.52	2.54
	0.0	7.30	7.21	7.15	7.10	2.38	2.41	2.43	2.45
	2.8	7.79	7.67	7.65	7.59	2.32	2.35	2.37	2.38
	5.6	8.57	8.46	8.40	8.34	2.26	2.29	2.30	2.31
	7.0	9.42	9.29	9.03	8.97	2.24	2.23	2.27	2.28
	11.1	9.93	9.81	9.76	9.67	2.13	2.15	2.16	2.17
	13.9	10.42	10.31	10.22	10.16	2.06	2.07	2.08	2.09
	16.7	10.92	10.77	10.71	10.63	1.99	2.00	2.01	2.01
	18.0	11.18	11.00	10.95	10.86	1.95	1.96	1.97	1.97
2100	-15.0	5.85	5.77	5.75	5.70	2.31	2.39	2.36	2.38
	-10.0	6.24	6.16	6.14	6.09	2.46	2.55	2.52	2.54
	-7.0	6.54	6.46	6.43	6.38	2.62	2.71	2.68	2.70
	-5.6	6.86	6.78	6.75	6.69	2.57	2.61	2.63	2.65
	-2.8	7.15	7.07	7.04	6.98	2.49	2.52	2.54	2.56
	0.0	7.38	7.27	7.24	7.18	2.40	2.44	2.45	2.47
	2.8	7.88	7.76	7.70	7.65	2.34	2.37	2.39	2.40
	5.6	8.63	8.54	8.49	8.43	2.28	2.31	2.32	2.33
	7.0	9.47	9.38	9.12	9.06	2.26	2.25	2.29	2.30
	11.1	10.05	9.90	9.84	9.76	2.15	2.17	2.18	2.19
	13.9	10.54	10.39	10.31	10.25	2.08	2.09	2.10	2.11
	16.7	11.03	10.86	10.80	10.71	2.00	2.02	2.02	2.03
	18.0	11.27	11.09	11.03	10.95	1.97	1.98	1.99	1.99

Note: The table shows the case where the operation frequency of a compressor is fixed.

36k+MOD30U-36HFN8-QRD0W(GA)									[SI_Unit]
INDOOR AIRFLOW (CMH)	HEATING PERFORMANCE AT INDOOR DRY BULB TEMPERATURE								
	OUTDOOR DB(°C)	TC:TOTAL CAPACITY IN KILOWATTS (KW)				PI:TOTAL POWER IN KILOWATTS (KW)			
		Indoor Conditions (DB °C)				Indoor Conditions (DB °C)			
		16.0	20.0	22.0	24.0	16.0	20.0	22.0	24.0
1500	-15.0	7.96	7.88	7.83	7.78	3.39	3.51	3.46	3.49
	-10.0	8.50	8.42	8.36	8.31	3.62	3.74	3.69	3.72
	-7.0	8.90	8.82	8.76	8.70	3.84	3.97	3.92	3.95
	-5.6	9.14	9.05	8.99	8.93	3.76	3.81	3.83	3.86
	-2.8	9.34	9.25	9.19	9.14	3.63	3.67	3.69	3.72
	0.0	9.45	9.34	9.28	9.22	3.49	3.53	3.55	3.57
	2.8	9.89	9.74	9.69	9.63	3.38	3.41	3.43	3.45
	5.6	10.67	10.53	10.47	10.38	3.27	3.30	3.31	3.33
	7.0	11.53	11.38	11.14	11.06	3.22	3.19	3.26	3.27
	11.1	12.01	11.84	11.75	11.69	3.04	3.05	3.06	3.07
	13.9	12.45	12.27	12.19	12.10	2.91	2.92	2.93	2.93
	16.7	12.88	12.71	12.62	12.51	2.79	2.79	2.80	2.80
	18.0	13.09	12.91	12.83	12.71	2.73	2.73	2.73	2.73
1800	-15.0	8.13	8.05	8.00	7.95	3.43	3.54	3.50	3.52
	-10.0	8.68	8.60	8.55	8.49	3.66	3.78	3.73	3.76
	-7.0	9.09	9.01	8.95	8.90	3.88	4.01	3.96	3.99
	-5.6	9.34	9.25	9.19	9.14	3.80	3.85	3.87	3.90
	-2.8	9.54	9.45	9.40	9.34	3.66	3.71	3.73	3.75
	0.0	9.66	9.54	9.45	9.40	3.52	3.56	3.58	3.60
	2.8	10.09	9.95	9.89	9.83	3.41	3.45	3.46	3.48
	5.6	10.88	10.73	10.67	10.61	3.30	3.33	3.34	3.36
	7.0	11.76	11.61	11.38	11.29	3.25	3.22	3.29	3.30
	11.1	12.25	12.07	12.01	11.93	3.07	3.08	3.09	3.10
	13.9	12.68	12.51	12.42	12.33	2.94	2.95	2.95	2.96
	16.7	13.15	12.94	12.86	12.77	2.81	2.82	2.82	2.82
	18.0	13.35	13.17	13.06	12.97	2.75	2.75	2.76	2.76
2100	-15.0	8.22	8.14	8.09	8.04	3.46	3.58	3.53	3.55
	-10.0	8.77	8.69	8.64	8.58	3.69	3.81	3.77	3.79
	-7.0	9.19	9.11	9.05	8.99	3.92	4.05	4.00	4.02
	-5.6	9.43	9.34	9.28	9.22	3.83	3.88	3.91	3.94
	-2.8	9.66	9.54	9.48	9.43	3.70	3.73	3.76	3.78
	0.0	9.74	9.63	9.57	9.51	3.55	3.59	3.61	3.63
	2.8	10.21	10.06	10.01	9.92	3.44	3.48	3.49	3.51
	5.6	10.99	10.85	10.79	10.70	3.33	3.36	3.37	3.39
	7.0	11.88	11.72	11.49	11.40	3.28	3.25	3.32	3.33
	11.1	12.36	12.22	12.13	12.04	3.09	3.11	3.12	3.13
	13.9	12.83	12.65	12.56	12.48	2.97	2.98	2.98	2.99
	16.7	13.26	13.09	13.00	12.88	2.84	2.84	2.85	2.85
	18.0	13.49	13.29	13.20	13.09	2.78	2.78	2.78	2.78

Note: The table shows the case where the operation frequency of a compressor is fixed.

36k+MOD30U-36HFN8-RRD0W(GA)									[SI_Unit]
INDOOR AIRFLOW (CMH)	HEATING PERFORMANCE AT INDOOR DRY BULB TEMPERATURE								
	OUTDOOR DB(°C)	TC:TOTAL CAPACITY IN KILOWATTS (KW)				PI:TOTAL POWER IN KILOWATTS (KW)			
		Indoor Conditions (DB °C)				Indoor Conditions (DB °C)			
		16.0	20.0	22.0	24.0	16.0	20.0	22.0	24.0
1500	-15.0	8.07	7.97	7.95	7.90	3.41	3.52	3.48	3.50
	-10.0	8.62	8.51	8.49	8.43	3.63	3.76	3.71	3.73
	-7.0	9.03	8.92	8.89	8.83	3.86	3.99	3.94	3.96
	-5.6	9.24	9.12	9.09	9.03	3.77	3.82	3.85	3.88
	-2.8	9.41	9.32	9.27	9.21	3.63	3.68	3.70	3.72
	0.0	9.50	9.38	9.32	9.27	3.50	3.54	3.56	3.56
	2.8	9.93	9.79	9.73	9.67	3.39	3.42	3.44	3.45
	5.6	10.69	10.54	10.49	10.43	3.27	3.30	3.31	3.33
	7.0	11.53	11.38	11.14	11.08	3.22	3.19	3.26	3.27
	11.1	11.98	11.84	11.75	11.67	3.04	3.05	3.06	3.07
	13.9	12.42	12.25	12.16	12.07	2.91	2.92	2.92	2.93
	16.7	12.86	12.65	12.56	12.48	2.78	2.78	2.79	2.79
	18.0	13.06	12.86	12.77	12.68	2.72	2.72	2.72	2.72
1800	-15.0	8.21	8.13	8.08	8.03	3.44	3.56	3.51	3.53
	-10.0	8.76	8.68	8.63	8.58	3.67	3.79	3.75	3.77
	-7.0	9.18	9.10	9.04	8.98	3.90	4.03	3.98	4.00
	-5.6	9.41	9.32	9.27	9.21	3.81	3.86	3.89	3.91
	-2.8	9.61	9.50	9.44	9.38	3.67	3.71	3.73	3.76
	0.0	9.70	9.59	9.53	9.47	3.53	3.56	3.58	3.60
	2.8	10.14	9.99	9.93	9.88	3.42	3.45	3.47	3.48
	5.6	10.92	10.78	10.69	10.63	3.31	3.33	3.35	3.36
	7.0	11.76	11.61	11.38	11.29	3.26	3.22	3.29	3.30
	11.1	12.25	12.07	11.98	11.90	3.06	3.08	3.09	3.09
	13.9	12.68	12.51	12.42	12.33	2.94	2.94	2.95	2.95
	16.7	13.12	12.91	12.83	12.74	2.81	2.81	2.81	2.81
	18.0	13.32	13.12	13.03	12.94	2.74	2.74	2.74	2.74
2100	-15.0	8.28	8.21	8.15	8.10	3.47	3.59	3.55	3.56
	-10.0	8.84	8.76	8.71	8.65	3.70	3.83	3.78	3.80
	-7.0	9.26	9.18	9.12	9.07	3.93	4.07	4.02	4.04
	-5.6	9.50	9.41	9.35	9.30	3.85	3.90	3.93	3.95
	-2.8	9.70	9.59	9.53	9.47	3.70	3.75	3.77	3.79
	0.0	9.79	9.67	9.61	9.56	3.56	3.59	3.61	3.63
	2.8	10.22	10.11	10.02	9.96	3.45	3.48	3.50	3.52
	5.6	11.04	10.89	10.81	10.75	3.34	3.36	3.38	3.39
	7.0	11.88	11.72	11.49	11.40	3.29	3.25	3.32	3.33
	11.1	12.36	12.19	12.10	12.04	3.09	3.11	3.11	3.12
	13.9	12.80	12.62	12.54	12.45	2.96	2.97	2.98	2.98
	16.7	13.23	13.06	12.97	12.86	2.83	2.83	2.84	2.84
	18.0	13.46	13.26	13.17	13.06	2.77	2.77	2.77	2.77

Note: The table shows the case where the operation frequency of a compressor is fixed.

42k									[SI_Unit]
INDOOR AIRFLOW (CMH)	HEATING PERFORMANCE AT INDOOR DRY BULB TEMPERATURE								
	OUTDOOR DB(°C)	TC:TOTAL CAPACITY IN KILOWATTS (KW)				PI:TOTAL POWER IN KILOWATTS (KW)			
		Indoor Conditions (DB °C)				Indoor Conditions (DB °C)			
		16.0	20.0	22.0	24.0	16.0	20.0	22.0	24.0
1680	-15.0	8.49	8.39	8.34	8.29	3.38	3.50	3.47	3.50
	-10.0	9.07	8.96	8.91	8.86	3.61	3.73	3.70	3.73
	-7.0	9.50	9.39	9.33	9.28	3.83	3.96	3.93	3.96
	-5.6	9.88	9.76	9.71	9.65	3.77	3.83	3.86	3.89
	-2.8	10.26	10.11	10.05	10.00	3.67	3.72	3.75	3.77
	0.0	10.49	10.34	10.29	10.23	3.56	3.61	3.64	3.67
	2.8	11.13	10.98	10.89	10.81	3.49	3.54	3.56	3.59
	5.6	12.14	11.97	11.91	11.82	3.41	3.46	3.48	3.50
	7.0	13.27	13.08	12.76	12.67	3.38	3.39	3.45	3.47
	11.1	13.92	13.74	13.66	13.57	3.25	3.28	3.30	3.32
	13.9	14.55	14.35	14.26	14.15	3.15	3.19	3.20	3.22
	16.7	15.19	14.99	14.87	14.76	3.06	3.09	3.11	3.12
	18.0	15.48	15.28	15.16	15.05	3.02	3.05	3.06	3.07
2040	-15.0	8.65	8.55	8.50	8.45	3.42	3.53	3.51	3.53
	-10.0	9.24	9.13	9.08	9.03	3.65	3.77	3.74	3.77
	-7.0	9.68	9.57	9.51	9.46	3.87	4.00	3.97	4.00
	-5.6	10.08	9.97	9.91	9.85	3.81	3.87	3.90	3.93
	-2.8	10.46	10.32	10.26	10.20	3.71	3.75	3.78	3.81
	0.0	10.69	10.55	10.49	10.40	3.59	3.65	3.68	3.70
	2.8	11.33	11.18	11.10	11.04	3.52	3.57	3.59	3.62
	5.6	12.37	12.23	12.14	12.05	3.44	3.49	3.51	3.53
	7.0	13.49	13.34	12.99	12.90	3.41	3.42	3.48	3.50
	11.1	14.21	14.00	13.92	13.83	3.27	3.31	3.33	3.35
	13.9	14.84	14.64	14.55	14.44	3.18	3.21	3.23	3.25
	16.7	15.48	15.28	15.16	15.08	3.09	3.12	3.13	3.14
	18.0	15.80	15.57	15.48	15.37	3.04	3.07	3.08	3.10
2400	-15.0	8.75	8.65	8.60	8.55	3.45	3.57	3.54	3.57
	-10.0	9.34	9.24	9.18	9.13	3.68	3.80	3.78	3.80
	-7.0	9.79	9.68	9.62	9.57	3.91	4.04	4.01	4.04
	-5.6	10.20	10.08	10.03	9.97	3.84	3.91	3.94	3.97
	-2.8	10.58	10.43	10.37	10.32	3.73	3.79	3.82	3.85
	0.0	10.81	10.66	10.61	10.52	3.63	3.68	3.71	3.73
	2.8	11.47	11.30	11.24	11.16	3.55	3.60	3.63	3.65
	5.6	12.52	12.34	12.26	12.17	3.47	3.52	3.54	3.57
	7.0	13.67	13.48	13.13	13.05	3.44	3.45	3.51	3.53
	11.1	14.35	14.18	14.06	13.97	3.30	3.34	3.36	3.38
	13.9	15.02	14.82	14.70	14.61	3.21	3.24	3.26	3.27
	16.7	15.66	15.45	15.34	15.22	3.11	3.14	3.16	3.17
	18.0	15.98	15.74	15.63	15.51	3.07	3.09	3.11	3.12

Note: The table shows the case where the operation frequency of a compressor is fixed.

48k									[SI_Unit]
INDOOR AIRFLOW (CMH)	HEATING PERFORMANCE AT INDOOR DRY BULB TEMPERATURE								
	OUTDOOR DB(°C)	TC:TOTAL CAPACITY IN KILOWATTS (KW)				PI:TOTAL POWER IN KILOWATTS (KW)			
		Indoor Conditions (DB °C)				Indoor Conditions (DB °C)			
		16.0	20.0	22.0	24.0	16.0	20.0	22.0	24.0
1680	-15.0	11.29	11.19	11.11	11.06	4.62	4.77	4.72	4.76
	-10.0	12.06	11.95	11.87	11.81	4.92	5.09	5.03	5.07
	-7.0	12.63	12.52	12.43	12.37	5.23	5.41	5.35	5.39
	-5.6	12.89	12.78	12.69	12.63	5.13	5.20	5.24	5.27
	-2.8	13.13	12.98	12.89	12.83	4.95	5.01	5.05	5.08
	0.0	13.18	13.04	12.95	12.86	4.78	4.83	4.86	4.89
	2.8	13.74	13.56	13.47	13.39	4.64	4.69	4.72	4.75
	5.6	14.75	14.55	14.46	14.37	4.51	4.55	4.57	4.60
	7.0	15.85	15.63	15.34	15.22	4.44	4.41	4.50	4.52
	11.1	16.44	16.21	16.09	15.97	4.21	4.24	4.25	4.26
	13.9	16.96	16.73	16.61	16.50	4.05	4.07	4.08	4.09
	16.7	17.51	17.25	17.13	17.02	3.90	3.92	3.92	3.93
	18.0	17.77	17.51	17.40	17.25	3.83	3.84	3.84	3.85
2040	-15.0	11.52	11.42	11.34	11.29	4.67	4.82	4.76	4.80
	-10.0	12.30	12.19	12.11	12.06	4.98	5.14	5.08	5.12
	-7.0	12.89	12.77	12.69	12.63	5.29	5.47	5.40	5.44
	-5.6	13.15	13.04	12.95	12.89	5.18	5.26	5.29	5.33
	-2.8	13.39	13.24	13.15	13.10	5.00	5.07	5.10	5.13
	0.0	13.47	13.30	13.21	13.13	4.82	4.88	4.90	4.93
	2.8	14.03	13.85	13.74	13.65	4.69	4.74	4.77	4.78
	5.6	15.04	14.87	14.75	14.66	4.55	4.59	4.62	4.64
	7.0	16.13	15.95	15.66	15.54	4.48	4.45	4.54	4.56
	11.1	16.76	16.55	16.44	16.32	4.24	4.27	4.29	4.30
	13.9	17.31	17.08	16.96	16.84	4.08	4.10	4.12	4.13
	16.7	17.86	17.60	17.48	17.37	3.93	3.95	3.95	3.96
	18.0	18.12	17.86	17.74	17.60	3.86	3.87	3.87	3.88
2400	-15.0	11.65	11.53	11.45	11.40	4.71	4.87	4.82	4.85
	-10.0	12.44	12.31	12.23	12.17	5.03	5.19	5.14	5.17
	-7.0	13.04	12.89	12.81	12.75	5.34	5.52	5.46	5.50
	-5.6	13.30	13.15	13.07	13.01	5.23	5.31	5.34	5.38
	-2.8	13.53	13.39	13.30	13.21	5.05	5.12	5.15	5.18
	0.0	13.62	13.44	13.36	13.27	4.86	4.92	4.96	4.99
	2.8	14.17	14.00	13.88	13.79	4.74	4.78	4.81	4.83
	5.6	15.22	15.01	14.93	14.81	4.60	4.64	4.67	4.69
	7.0	16.34	16.12	15.80	15.71	4.53	4.50	4.59	4.61
	11.1	16.96	16.73	16.61	16.50	4.29	4.32	4.34	4.35
	13.9	17.51	17.28	17.13	17.02	4.13	4.15	4.17	4.18
	16.7	18.06	17.80	17.69	17.57	3.98	4.00	4.00	4.01
	18.0	18.35	18.06	17.95	17.80	3.90	3.92	3.92	3.93

Note: The table shows the case where the operation frequency of a compressor is fixed.

55k									[SI_Unit]
INDOOR AIRFLOW (CMH)	HEATING PERFORMANCE AT INDOOR DRY BULB TEMPERATURE								
	OUTDOOR DB(°C)	TC:TOTAL CAPACITY IN KILOWATTS (KW)				PI:TOTAL POWER IN KILOWATTS (KW)			
		Indoor Conditions (DB °C)				Indoor Conditions (DB °C)			
		16.0	20.0	22.0	24.0	16.0	20.0	22.0	24.0
1820	-15.0	11.65	11.53	11.45	11.38	4.82	4.97	4.96	5.00
	-10.0	12.44	12.31	12.23	12.15	5.14	5.30	5.29	5.33
	-7.0	13.03	12.89	12.81	12.73	5.46	5.64	5.62	5.67
	-5.6	13.53	13.39	13.30	13.21	5.39	5.49	5.54	5.59
	-2.8	14.00	13.82	13.74	13.65	5.27	5.37	5.41	5.46
	0.0	14.29	14.08	14.00	13.91	5.15	5.24	5.29	5.34
	2.8	15.10	14.90	14.78	14.69	5.08	5.17	5.22	5.26
	5.6	16.44	16.20	16.12	16.00	5.01	5.10	5.14	5.18
	7.0	17.90	17.65	17.21	17.10	4.99	5.05	5.12	5.16
	11.1	18.75	18.52	18.37	18.26	4.85	4.93	4.97	5.01
	13.9	19.56	19.30	19.19	19.04	4.76	4.83	4.87	4.91
	16.7	20.38	20.12	19.97	19.83	4.67	4.74	4.77	4.80
	18.0	20.78	20.49	20.35	20.20	4.63	4.69	4.72	4.76
2210	-15.0	11.88	11.75	11.68	11.60	4.86	5.02	5.00	5.04
	-10.0	12.69	12.55	12.47	12.39	5.18	5.36	5.33	5.38
	-7.0	13.29	13.15	13.07	12.98	5.51	5.69	5.67	5.72
	-5.6	13.79	13.65	13.56	13.47	5.44	5.54	5.59	5.64
	-2.8	14.26	14.08	14.00	13.91	5.32	5.42	5.47	5.52
	0.0	14.55	14.37	14.29	14.17	5.20	5.29	5.34	5.39
	2.8	15.39	15.19	15.07	14.98	5.13	5.22	5.27	5.31
	5.6	16.76	16.52	16.44	16.32	5.06	5.15	5.19	5.24
	7.0	18.25	18.00	17.56	17.45	5.04	5.10	5.17	5.21
	11.1	19.13	18.87	18.75	18.64	4.90	4.98	5.02	5.06
	13.9	19.97	19.68	19.56	19.42	4.81	4.88	4.92	4.95
	16.7	20.78	20.49	20.35	20.20	4.72	4.78	4.82	4.85
	18.0	21.19	20.90	20.75	20.61	4.67	4.74	4.77	4.80
2600	-15.0	12.01	11.86	11.79	11.74	4.91	5.07	5.05	5.10
	-10.0	12.83	12.67	12.59	12.53	5.24	5.41	5.39	5.44
	-7.0	13.44	13.27	13.19	13.13	5.57	5.75	5.73	5.77
	-5.6	13.94	13.76	13.68	13.62	5.49	5.60	5.65	5.70
	-2.8	14.40	14.23	14.14	14.06	5.37	5.47	5.52	5.57
	0.0	14.69	14.52	14.40	14.32	5.25	5.35	5.39	5.44
	2.8	15.54	15.33	15.22	15.13	5.18	5.27	5.32	5.36
	5.6	16.93	16.70	16.58	16.47	5.11	5.20	5.24	5.29
	7.0	18.42	18.17	17.74	17.62	5.09	5.15	5.22	5.26
	11.1	19.30	19.07	18.93	18.81	4.95	5.03	5.07	5.11
	13.9	20.15	19.88	19.74	19.62	4.86	4.93	4.97	5.00
	16.7	20.99	20.70	20.55	20.41	4.76	4.83	4.87	4.90
	18.0	21.39	21.10	20.96	20.81	4.72	4.78	4.82	4.85

Note: The table shows the case where the operation frequency of a compressor is fixed.

8. Noise Criterion Curves

8.1 Indoor Unit

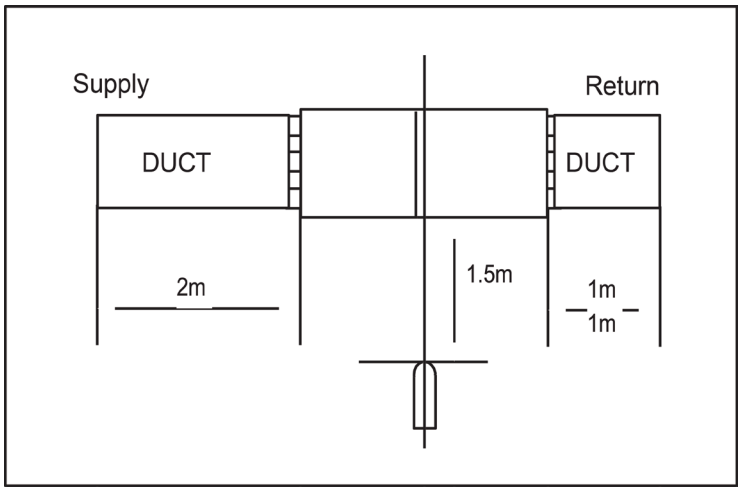

Notes:

-Sound measured at 1.5m away from the center of the unit.

-Data is valid at free field condition

-Data is valid at nominal operation condition

-Reference acoustic pressure OdB = 20μPa

-Sound level will vary depending on a range of factors such as the construction -(acoustic absorption coefficient) of particular room in which the equipment is installed.

-The operating conditions are assumed to be standard.

12k

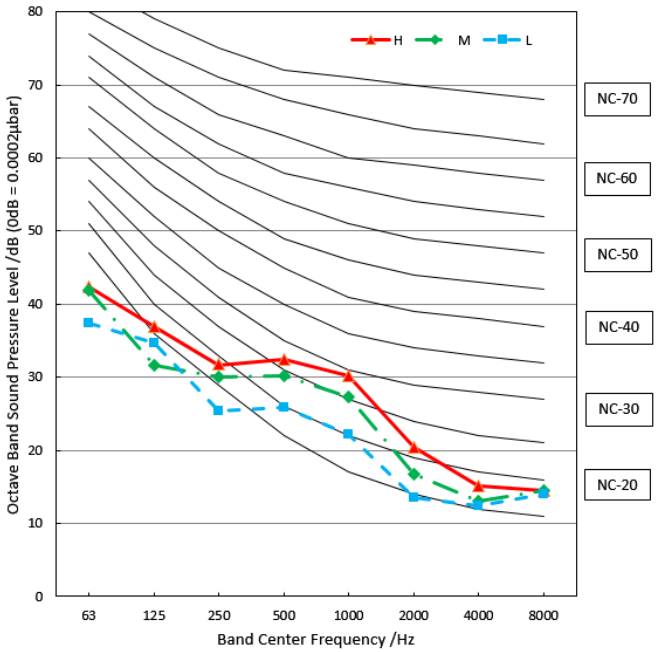

18k

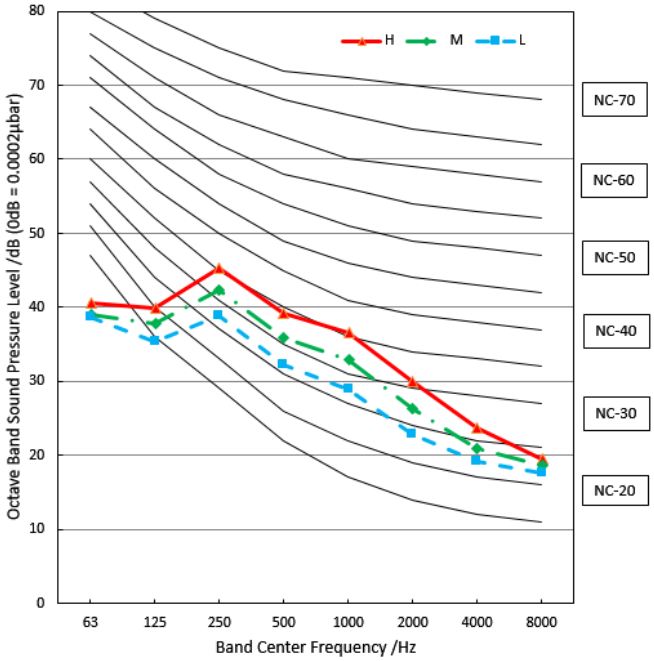

24k

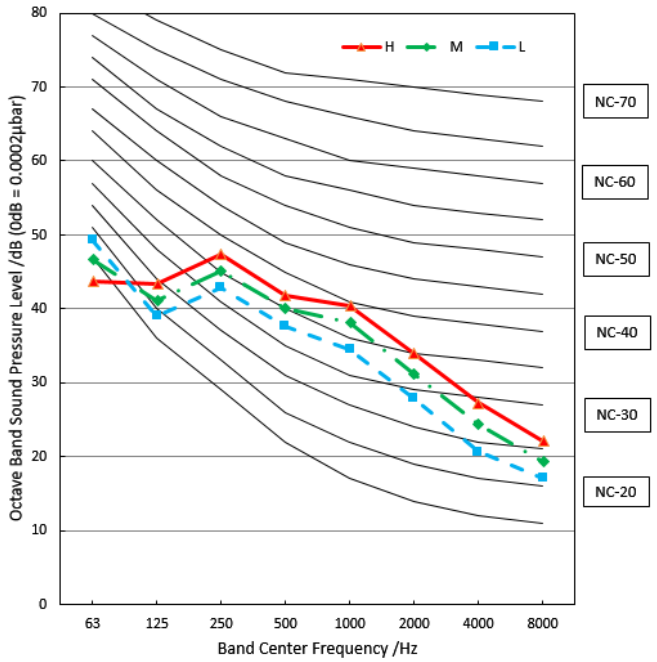

30k

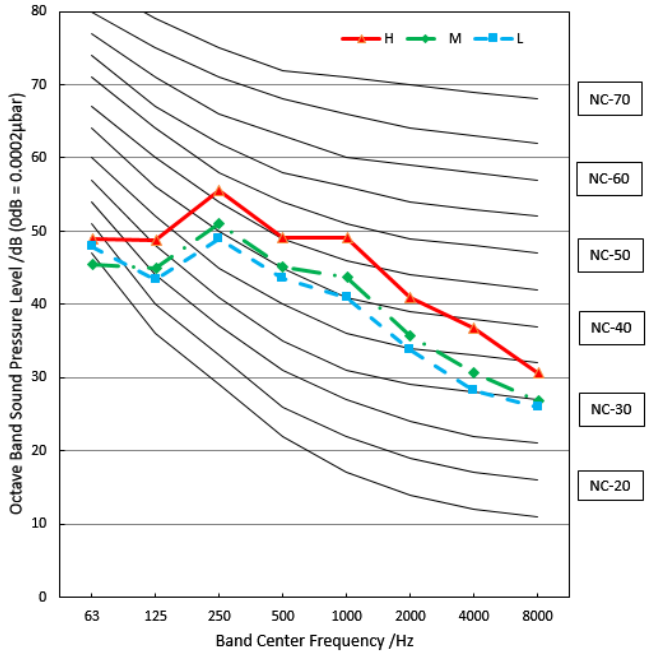

36k

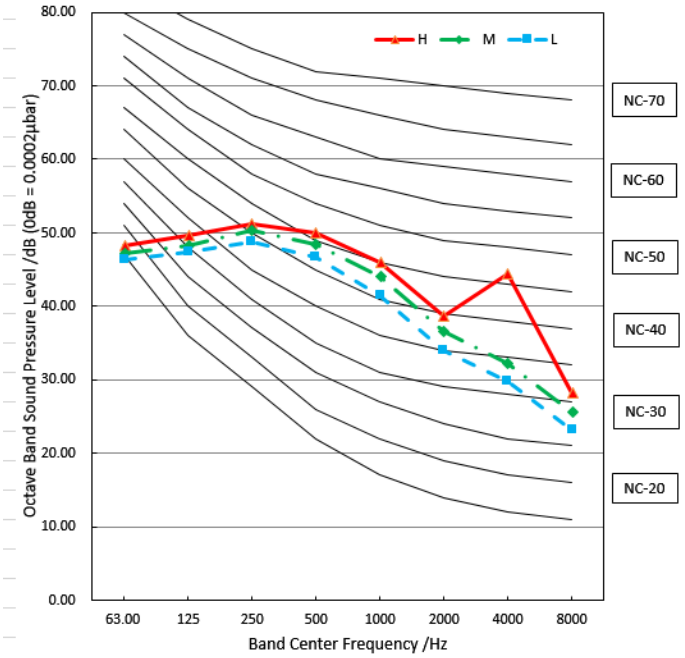

42k

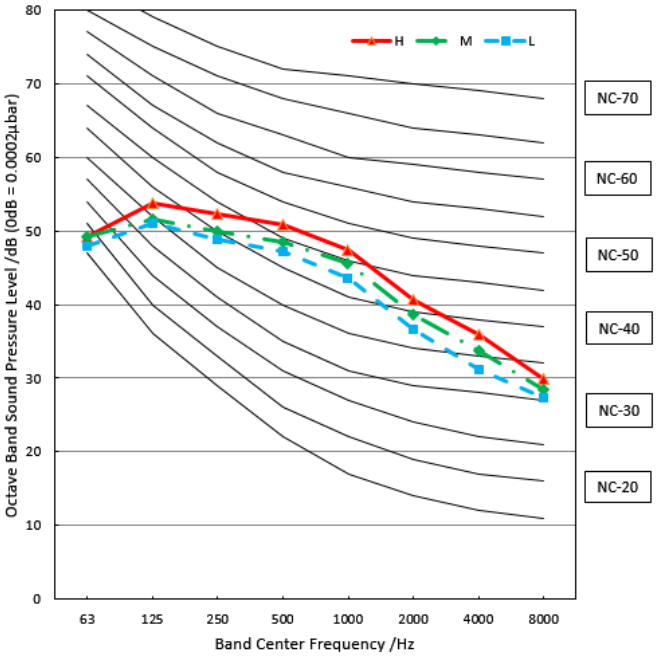

48k

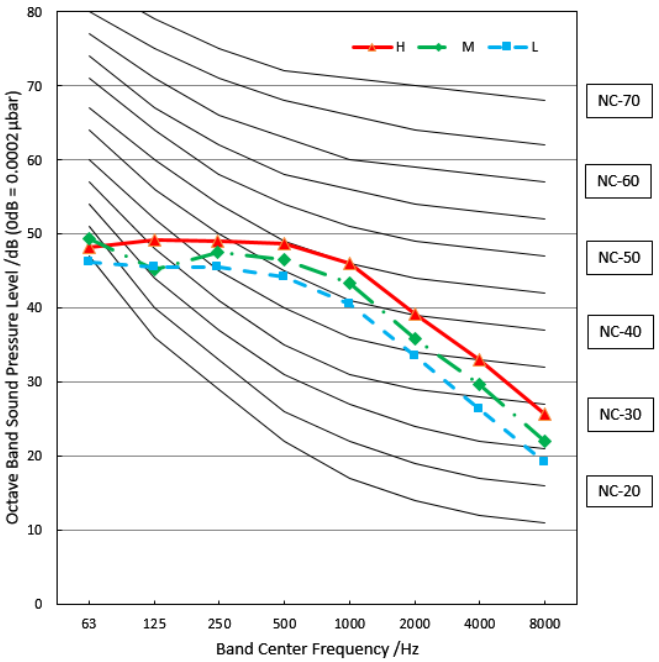

55k

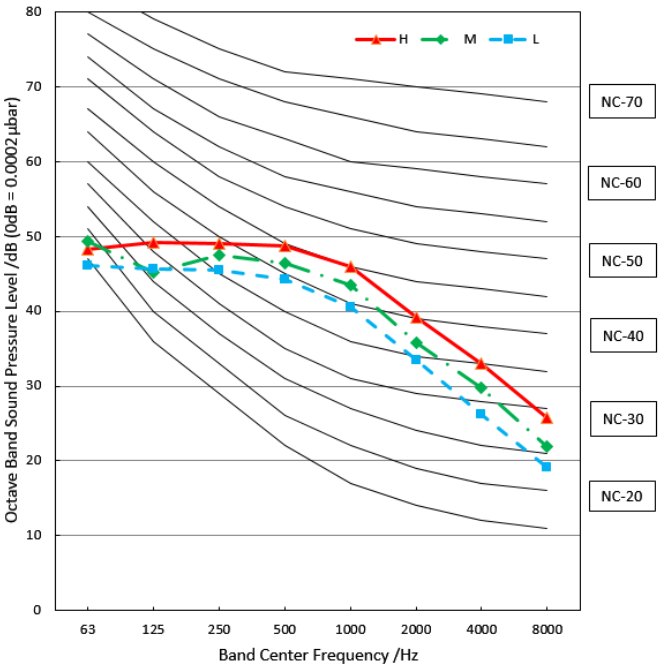

9. Electrical Characteristics

Capacity (Btu/h)		12k~18k	24k	30k	36k
OUDOOR UNIT POWER	Phase	1-phase	1-phase	1-phase	1-phase
	Frequency and Voltage	220-240V, 50Hz	220-240V, 50Hz	220-240V, 50Hz	220-240V, 50Hz
	Power Wiring (mm^2)	3×1.5	3×2.5	3×2.5	3×4.0
	Circuit Breaker/ Fuse (A)	25/20	25/20	50/40	50/40
Indoor/Outdoor Connecting Wiring	Weak Electric Signal)(mm^2)				
	Strong Electric Signal(mm^2)	4×1.0	4×1.0	4×1.0	4×1.0

Capacity (Btu/h)		36k	42k	48~55k
OUDOOR UNIT POWER	Phase	3-phase	1-phase	3-phase
	Frequency and Voltage	380-415V, 50Hz	220-240V, 50Hz	380-415V, 50Hz
	Power Wiring (mm^2)	5×2.5	3×4.0	5×2.5
	Circuit Breaker/ Fuse (A)	25/20	50/40	32/25
Indoor/Outdoor Connecting Wiring	Weak Electric Signal) (mm^2)			
	Strong Electric Signal(mm^2)	4×1.0	4×1.0	4×1.0

10. Electrical Wiring Diagrams

IDU Capacity (Btu/h)	IDU Wiring Diagram
12k~55k	16023000008817

Abbreviation	Paraphrase
Y/G	Yellow-Green Conductor
CAP	Indoor Fan Capacitor
AC FAN	Alternating Current Fan
DC FAN	Direct Current FAN
PUMP	PUMP
L	LIVE
N	NEUTRAL
TO CCM Comm.Bus	Central Controller
T1	Indoor Room Temperature
T2	Coil Temperature of Indoor Heat Exchanger
P1	Super High Speed
P2	High Speed

Indoor unit wiring diagram: 16023000008817

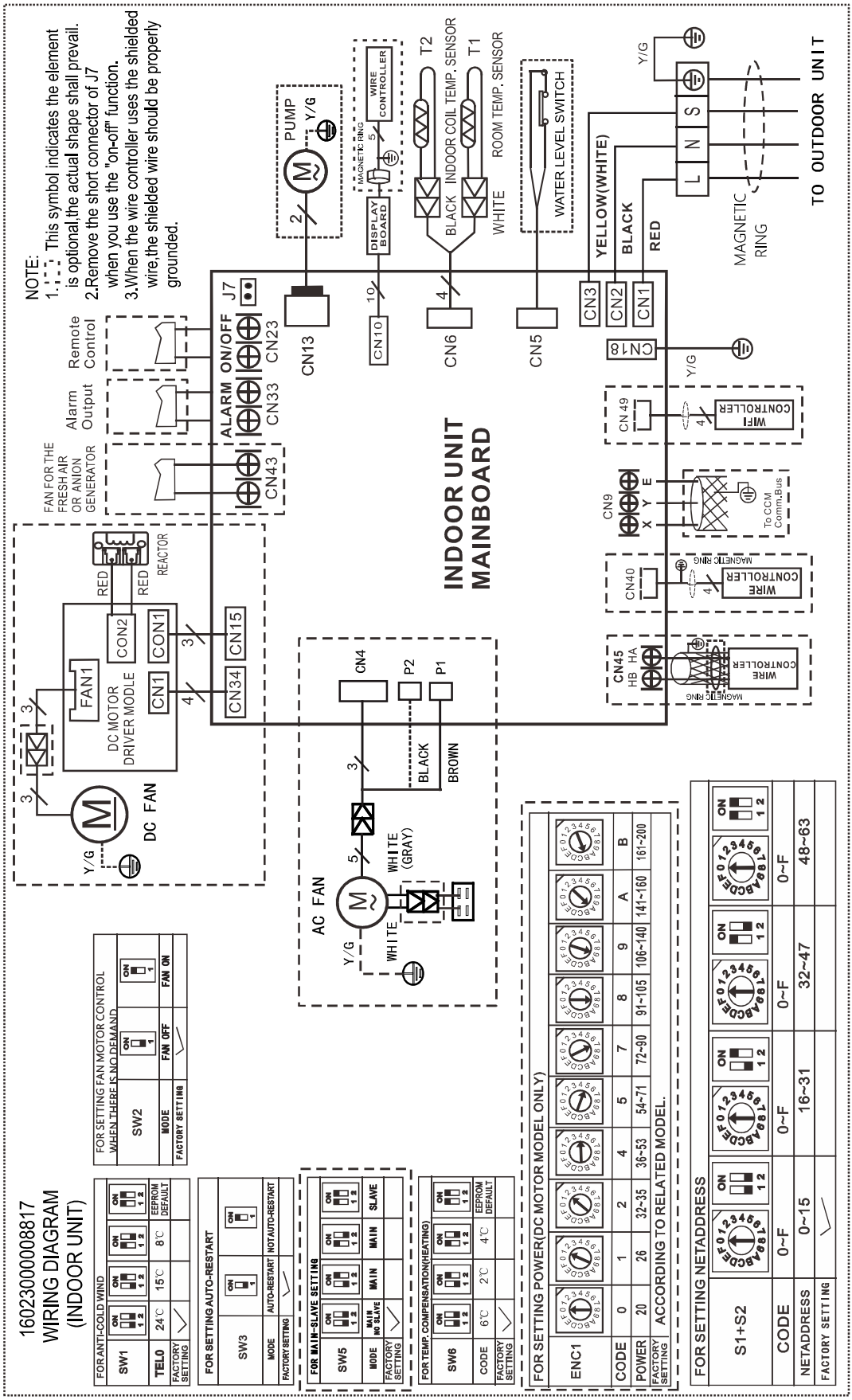

10.1 Some connectors introduce:

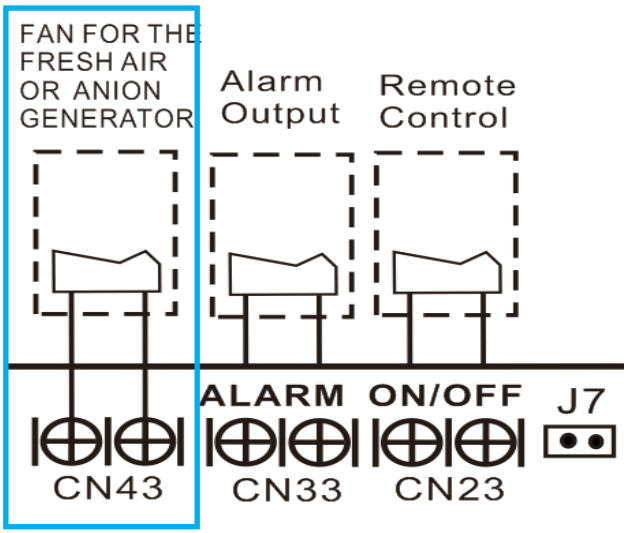

A. For new fresh motor terminal port (also for Anion generator) CN43:
1. Connect the fan motor to the port, no need care L/N of the motor;
2. The output voltage is the power supply;
3. The fresh motor can not excess 200W or 1A, follow the smaller one;
4. The new fresh motor will be worked when the indoor fan motor work ;when the indoor fan motor stops , the new fresh motor would be stopped;
5. When the unit enters force cooling mode or capacity testing mode , the fresh motor isn't work.

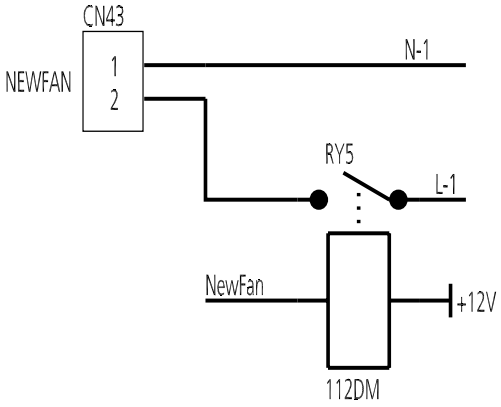

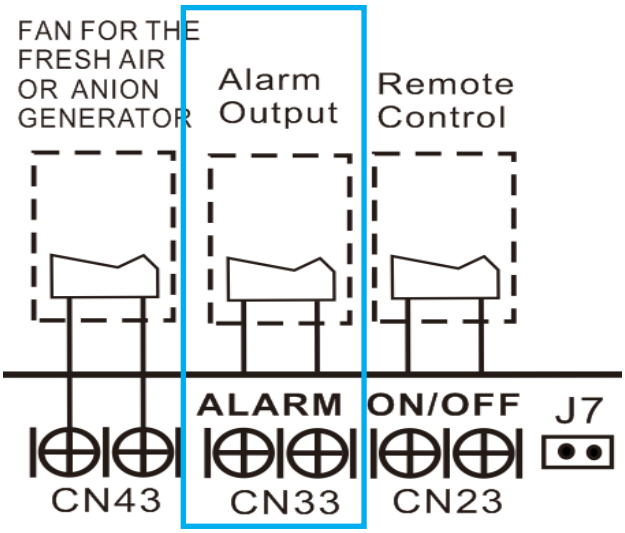

B For ALARM terminal port CN33

1. Provide the terminal port to connect ALARM, but no voltage of the terminal port, the power from the ALARM system (not from the unit);
2. Although design voltage can support higher voltage, but we strongly ask you connect the power less than 24V, current less than 0.5A;
3. When the unit occurs the problem, the relay would be closed, then ALARM works.

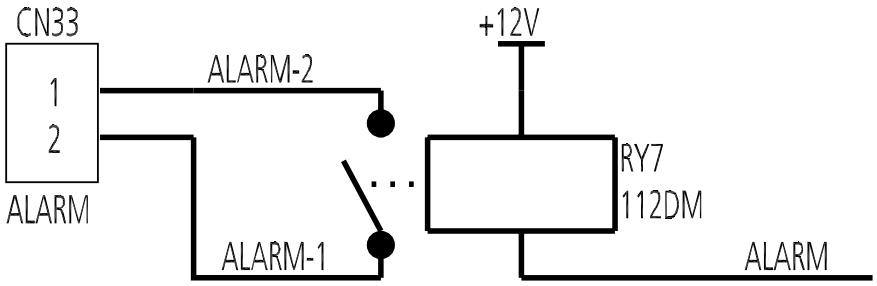

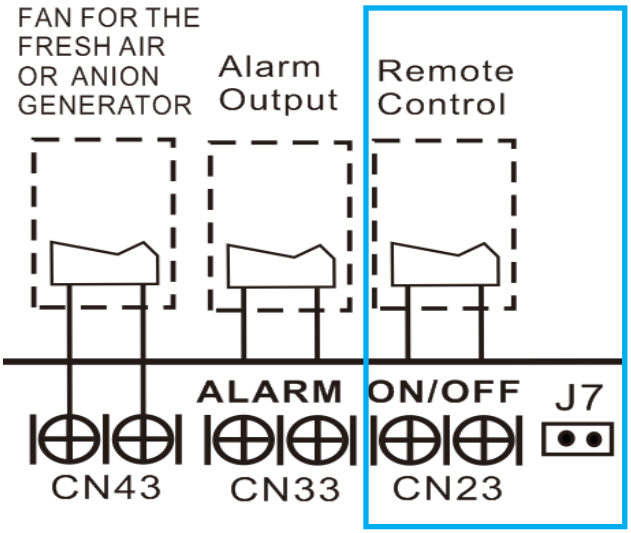

C. For remote control (ON-OFF) terminal port CN23 and short connector of J7

1. Remove the short connector of J7 when you use ON-OFF function;
2. When remote switch off (OPEN); the unit would be off;
3. When remote switch on (CLOSE); the unit would be on;
4. When close/open the remote switch, the unit would be responded the demand within 2 seconds;
5. When the remote switch on, you can use remote controller/ wire controller to select the mode what you want; when the remote switch off, the unit would not respond the demand from remote controller/wire controller.

when the remote switch off, but the remote controller/wire controller are on, CP code would be shown on the display board.

6. The voltage of the port is 12V DC, design Max. current is 5mA.

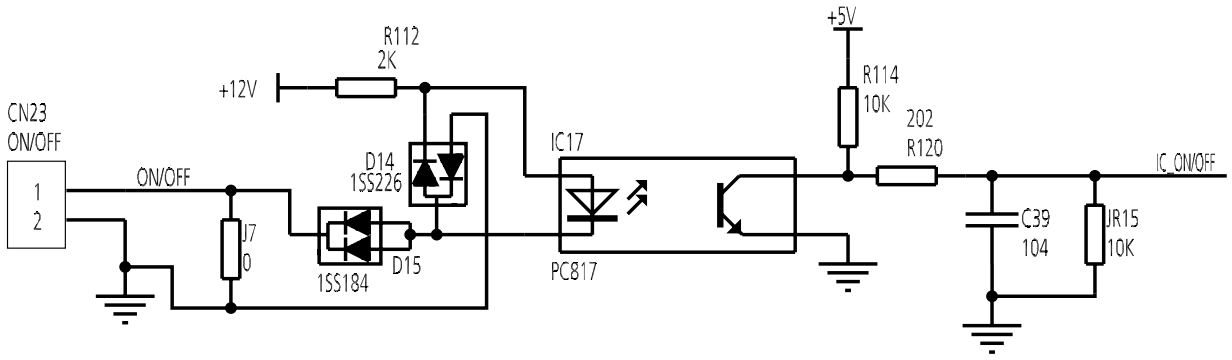

10.2 Micro-Switch Introduce:

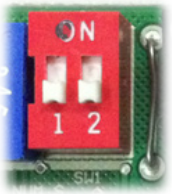

FOR ANTI-COLD WIND				
SW1	ON 1 2	ON 1 2	ON 1 2	ON 1 2
TEL0	24℃	15℃	8℃	EEPROM DEFAULT
FACTORY SETTING	✓			

A. Micro-switch SW1 is for selection of indoor fan stop temperature (TEL0) when it is in anti-cold wind action in heating mode.

Range: 24°C, 15°C, 8°C, according to EEROM setting (reserved for special customizing).

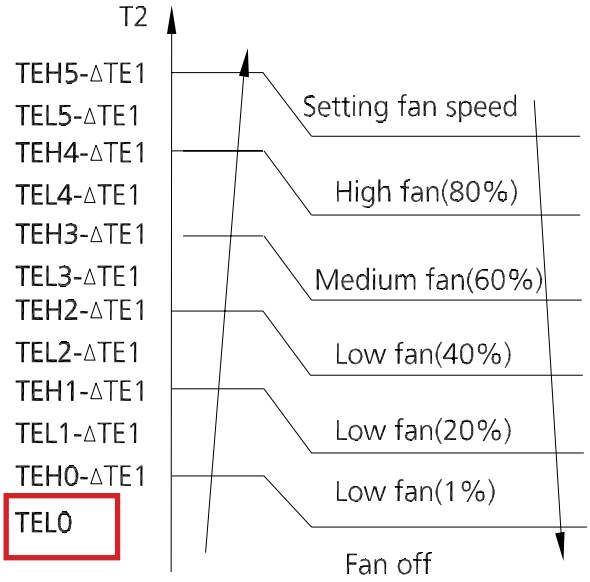



FOR SETTING FAN MOTOR CONTROL WHEN THERE IS NO DEMAND		
SW2	ON 1	ON 1
MODE	FAN OFF	FAN ON
FACTORY SETTING	✓	

B. Micro-switch SW2 is for selection of indoor FAN ACTION if room temperature reaches the set point and the compressor stops.

Range: OFF (in 127s), Keep running.



FOR SETTING AUTO-RESTART		
SW3	ON 1	ON 1
MODE	AUTO-RESTART	NOT AUTO-RESTART
FACTORY SETTING	✓	

C. Micro-switch SW3 is for selection of auto-restart function.

Range: Active, inactive



FOR TEMP. COMPENSATION(HEATING)				
SW6	ON 1 2	ON 1 2	ON 1 2	ON 1 2
CODE	6℃	2℃	4℃	EEPROM DEFAULT
FACTORY SETTING	✓			

D. Micro-switch SW6 is for selection of temperature compensation in heating mode. This helps to reduce the real temperature difference between ceiling and floor so that the unit could run properly. If the height of installation is lower, smaller value could be chosen.

Range: 6°C, 4°C, 2°C, E function (reserved for special customizing)

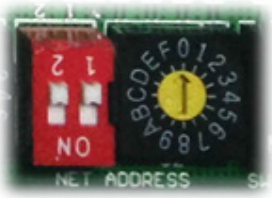

FOR SETTING NETADDRESS				
S1+S2	ON 1 2	ON 1 2	ON 1 2	ON 1 2
CODE	0~F	0~F	0~F	0~F
NETADDRESS	0~15	16~31	32~47	48~63
FACTORY SETTING	✓			

E. Micro-switch S1 and dial-switch S2 are for address setting when you want to control this unit by a central controller.

Range: 00-63

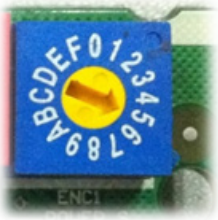

FOR SETTING POWER(DC MOTOR MODEL ONLY)										
ENC1										
CODE	0	1	2	4	5	7	8	9	A	B
POWER	20	26	32~35	36~53	54~71	72~90	91~105	106~140	141~160	161~200
FACTORY SETTING	ACCORDING TO RELATED MODEL.									

F. Dial-switch ENC1: The indoor PCB is universal designed for whole series units from 7K to 68K. This ENC1 setting will tell the main program what size the unit is.

NOTE: Usually there is glue on it because the switch position cannot be changed at random unless you want to use this PCB as a spare part to use in another unit. Then you have to select the right position to match the size of the unit.

“20” means 2kW (7K),“105” means 10.5kW(36K), and so on.



FOR MAIN-SLAVE SETTING				
SW5	ON 1 2	ON 1 2	ON 1 2	ON 1 2
MODE	MAIN NO SLAVE	MAIN	MAIN	SLAVE
FACTORY SETTING	✓			

G. Micro-switch SW5 is for setting the master or slave unit when the unit is in twin connection.

Range: Master no slave (Normal 1 drive 1 connection), Master (2 positions without difference), Slave

Indoor Unit-Floor Ceiling

Contents

1. Feature....2
2. Dimensional Drawings....3
3. Part names....4
4. Service Place....5
5. Accessories....6
6 Air Velocity and Temperature Distributions....7
7. Capacity Tables....63
8. Noise Criterion Curves....81
9. Electrical Characteristics....83
10. Electrical Wiring Diagrams....84

1. Feature

1.1 Easy installation-2 Style Installation

- Fashionable design and streamline appearance, suitable for different room style.

1.2 3D Airflow

- Vertical air flow and horizontal airflow can be adjusted by remote controllerto direct air flow to every corner of the room.

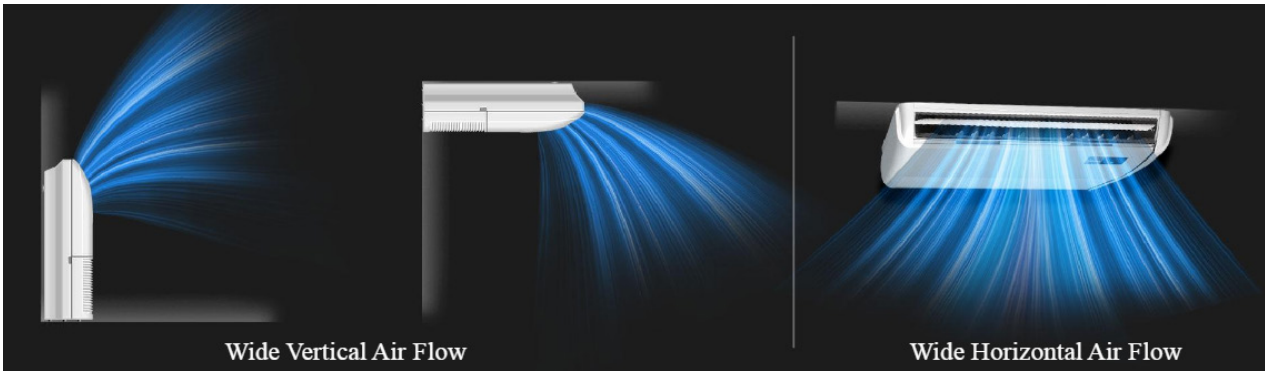

1.3 Easy Maintenance-Universal Spare Parts

- More than 60% parts and assemblies (such as fan wheel,plastic cases, metal parts etc.) are universal for 3 different bodies, which makes maintenance much easier.

1.4 Fresh Air

- Fresh air intake function brings you fresh and comfortable air feeling.

1.5 Healthy Filters(Optional)

- Varies of healthy filters can be chosen to fix on the machine.

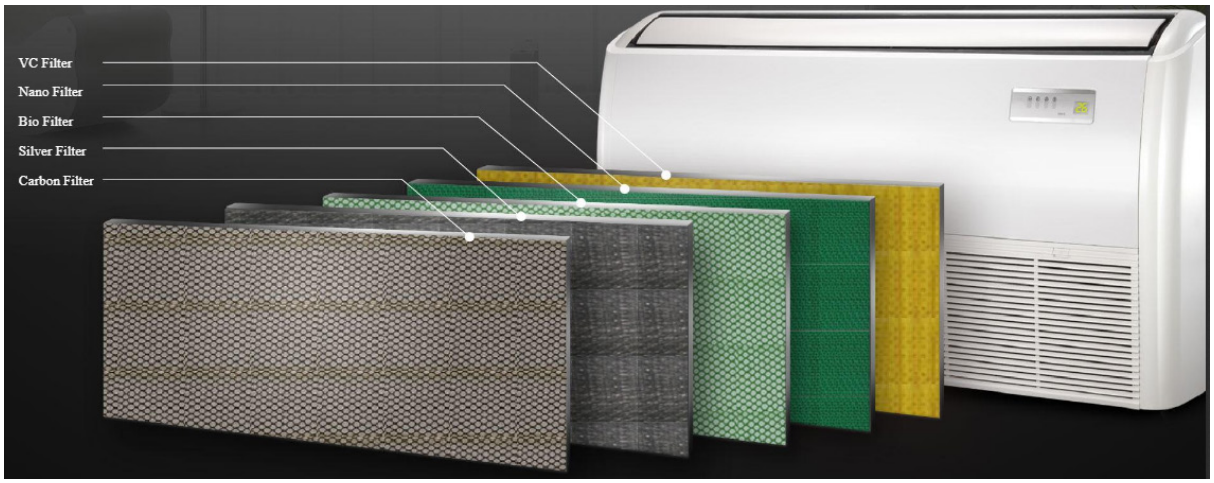

2. Dimensional Drawings

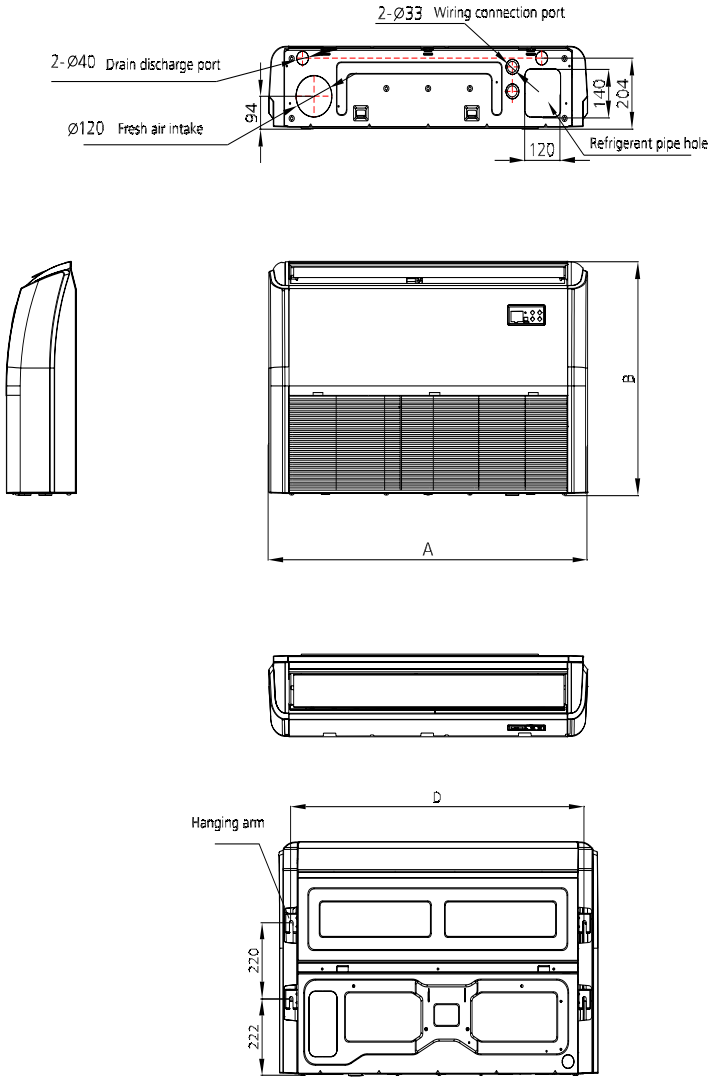

Model (KBtu/h)	Unit	A	B	C	D
18-24	mm	1068	675	235	983
	inch	42.05	26.57	9.25	38.7
36-60	mm	1650	675	235	1565
	inch	64.96	26.57	9.25	61.61

3. Part names

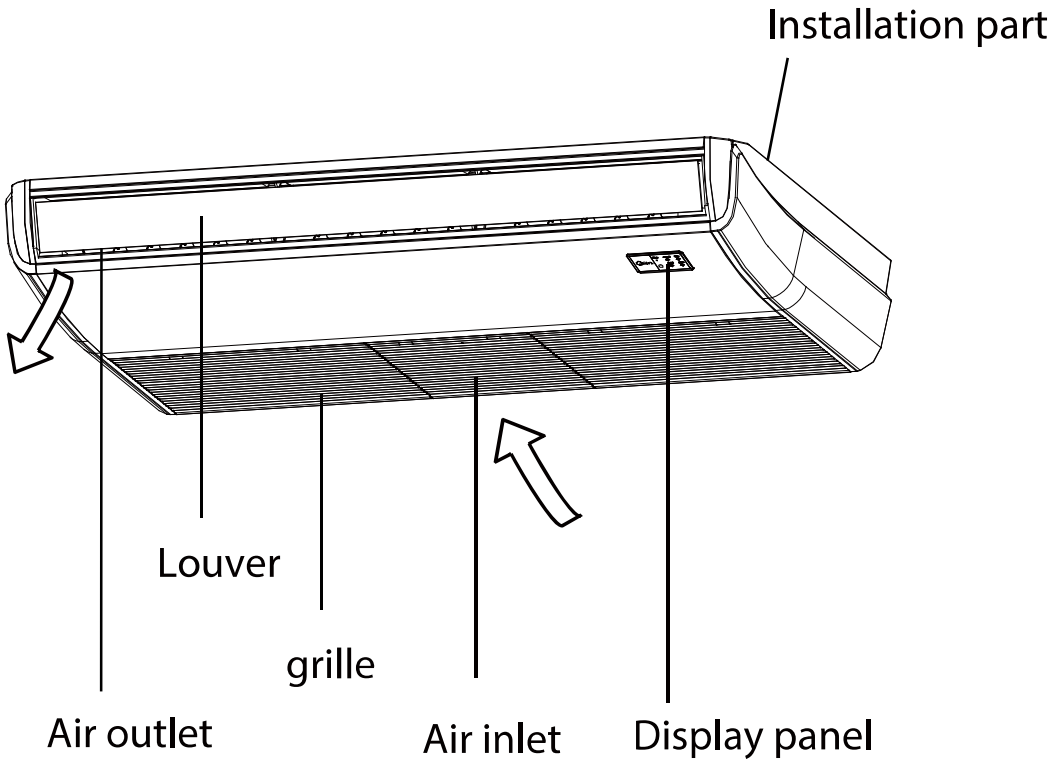
Installation part
Louver
grille
Air outlet
Air inlet
Display panel

4. Service Place

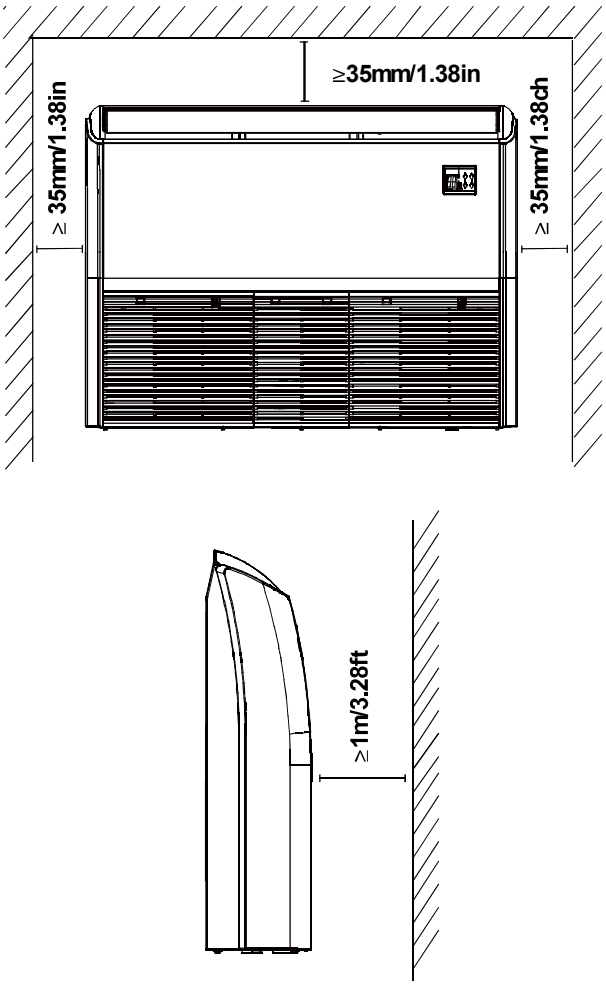

5. Accessories

The air conditioning system comes with the following accessories. Use all of the installation parts and accessories to install the air conditioner. Improper installation may result in water leakage, electrical shock and fire, or equipment failure.

	Name	Shape	Quantity
Refrigeration Fittings	Soundproof/insulation sheath (some models)		1
Drainpipe Fittings	Outlet pipe sheath(some models)		1
	Outlet pipe clasp(some models)		1
	Drain joint (some models)	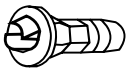	1
	Seal ring (some models)		1
Remote controller & Its Frame (some models)	Remote controller	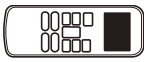	1
	Fixing screw for remote controller holder ST2.9 x 10		2
	Remote controller holder		1
	Dry battery AAA		2
	Remote controller illustration		1
EMC Magnetic Ring (some models)	Magnetic ring (wrap the electric wires S1 & S2 (P & Q & E) around the magnetic ring twice)	 S1&S2(P&Q&E)	1
	Magnetic ring (Hitch it on the connective cable between indoor unit and outdoor unit after installation.)		1
	Owner's manual&Installation manual		1

Optional accessories:

- There are two types of remote controls: wired and wireless.
- Select a remote controller based on customer preferences and requirements and install in an appropriate place.
- Refer to catalogues and technical literature for guidance on selecting a suitable remote controller.

6. Air Velocity and Temperature Distributions

18K-Ceiling installation:

Discharge Angle 30°

Cooling airflow velocity distributions

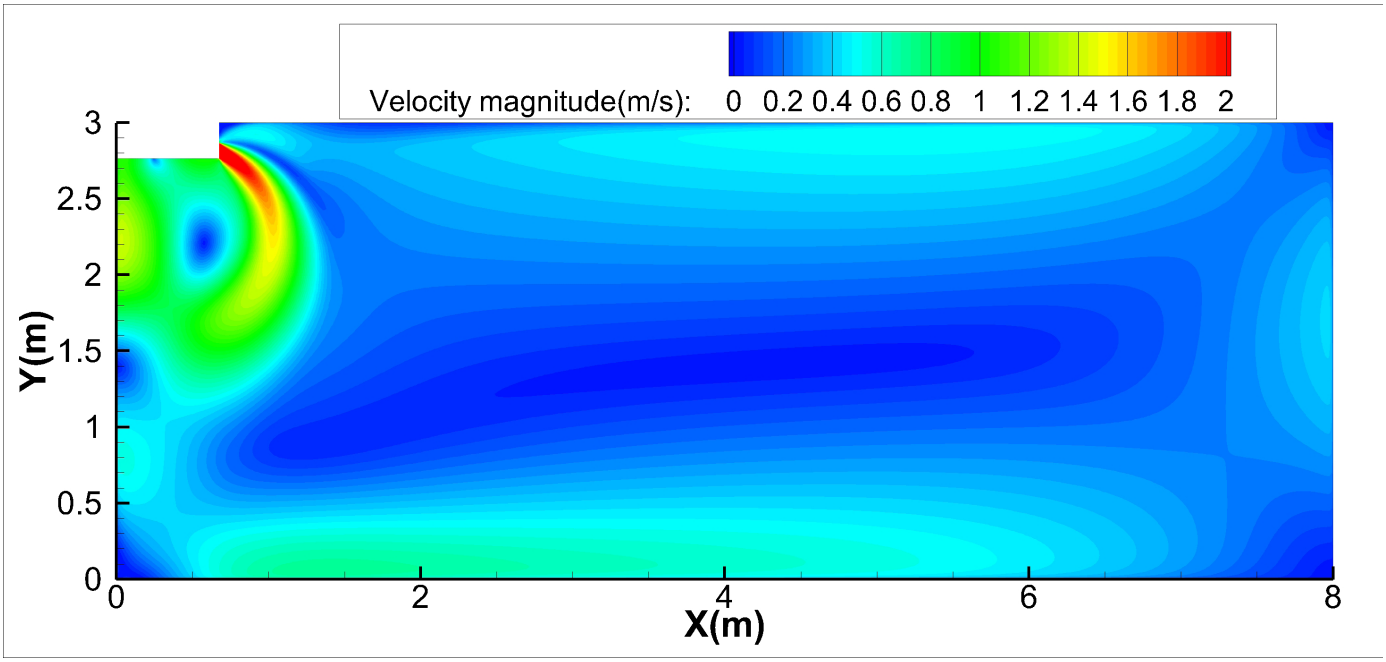

Cooling temperature distributions

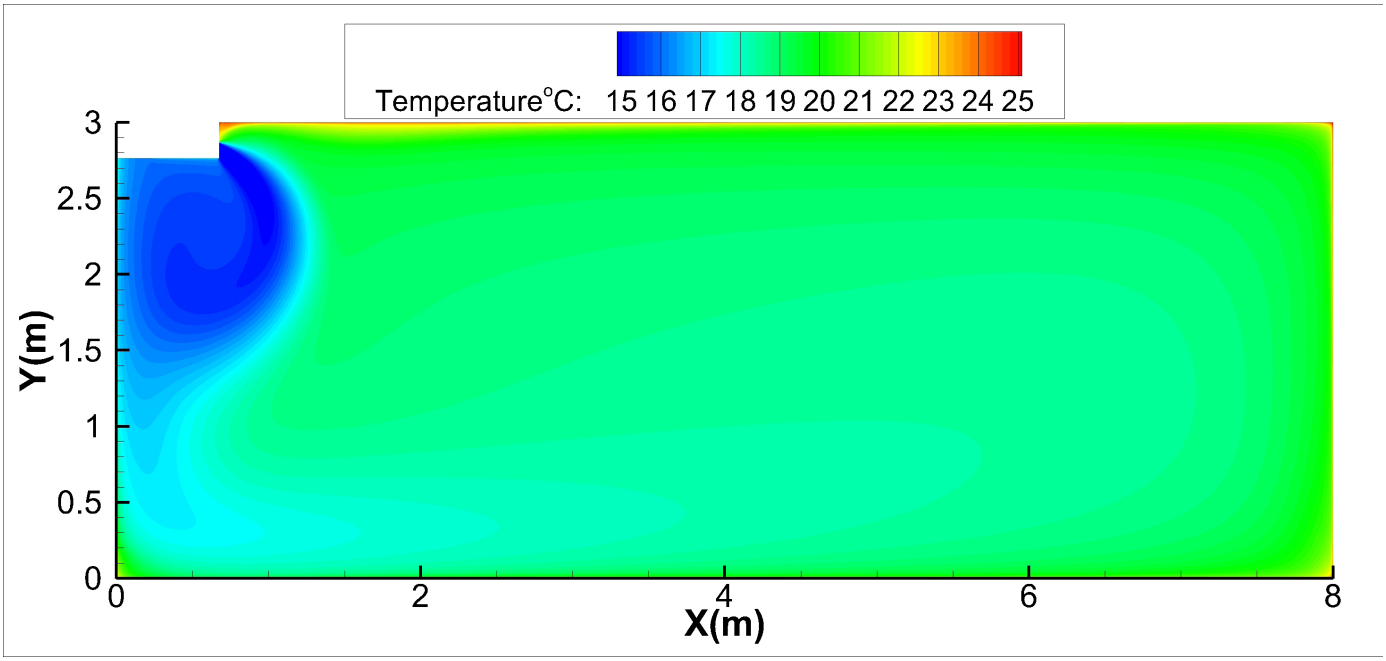

18K-Ceiling installation:

Discharge Angle 60°

Cooling airflow velocity distributions

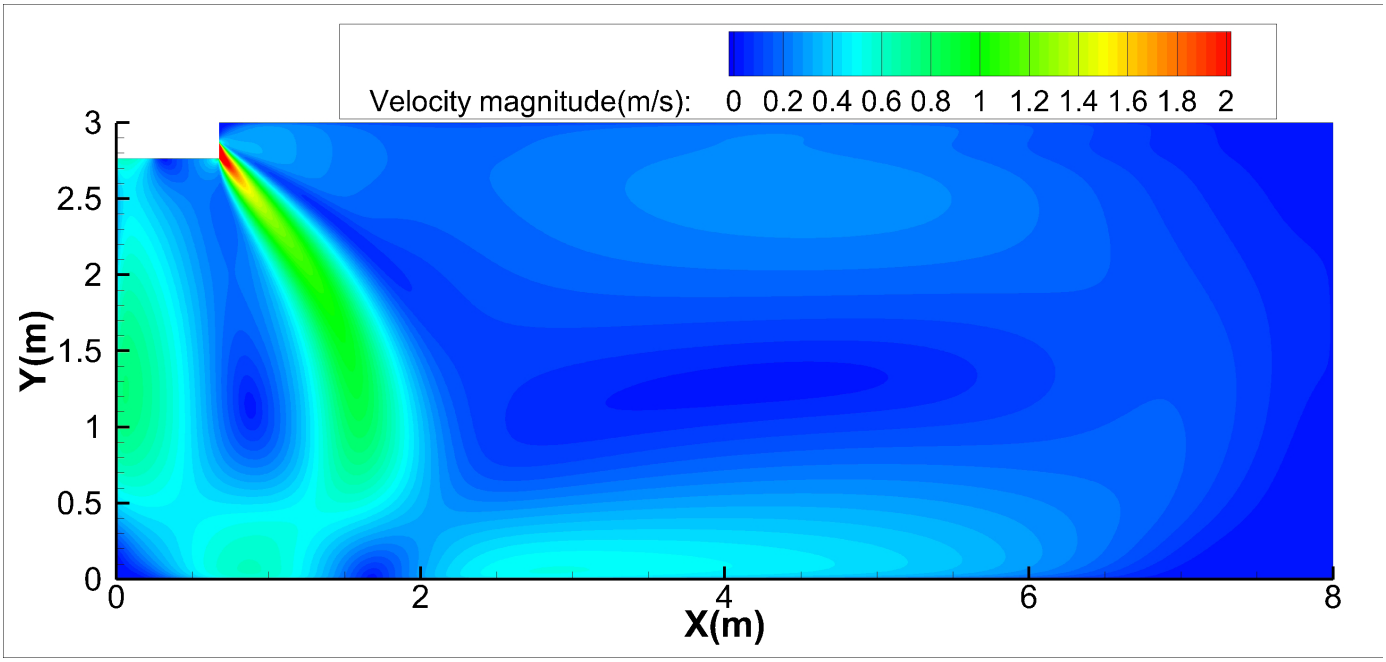

Cooling temperature distributions

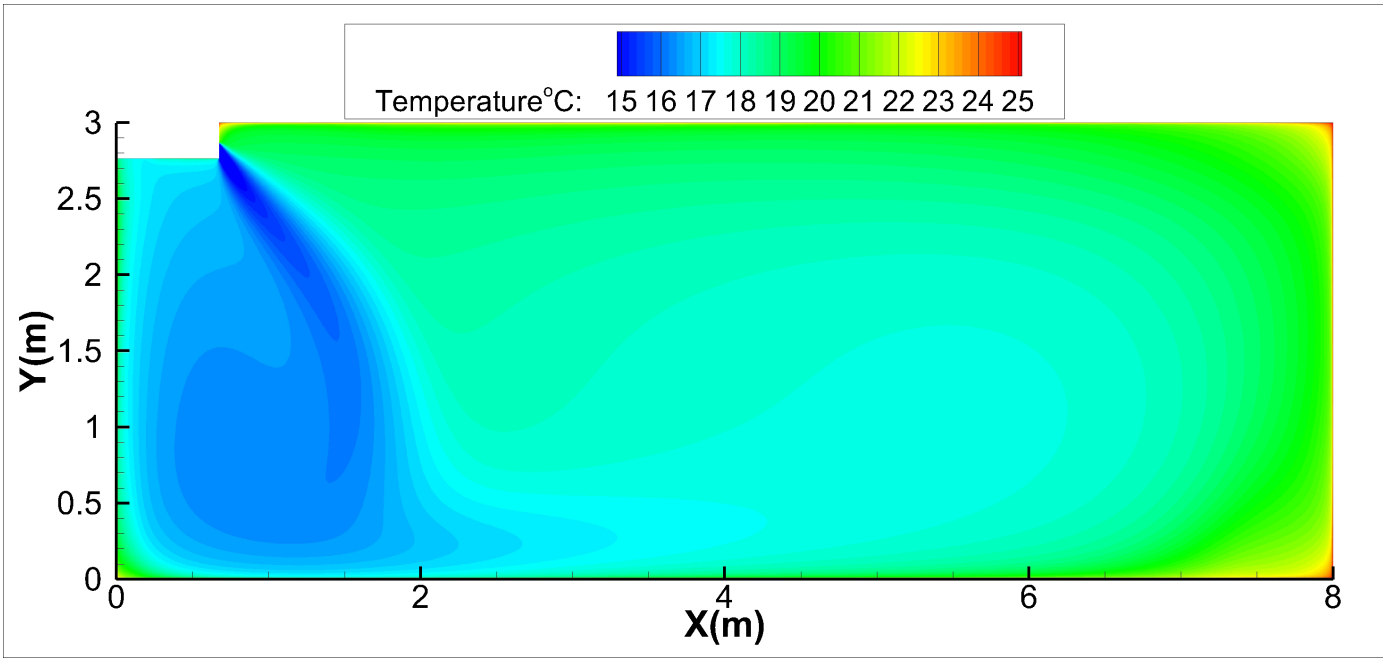

18K-Ceiling installation:

Discharge Angle 30°

Heating airflow velocity distributions

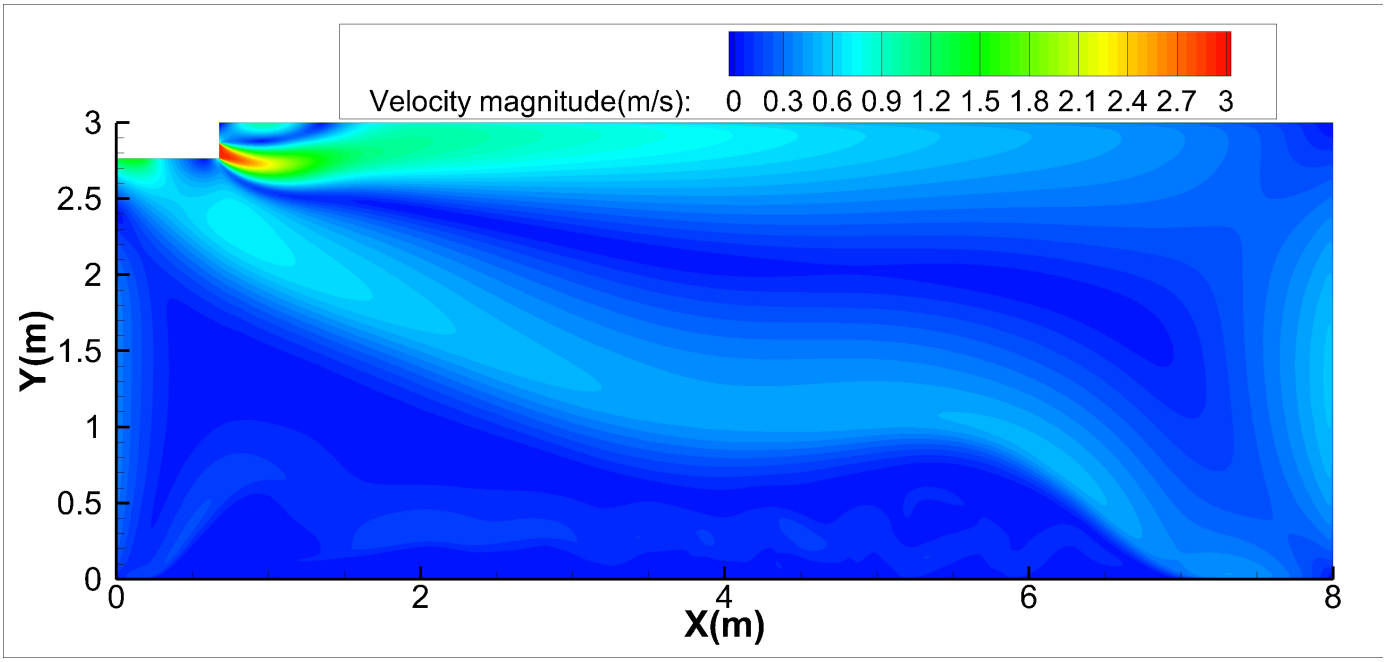

Heating temperature distributions

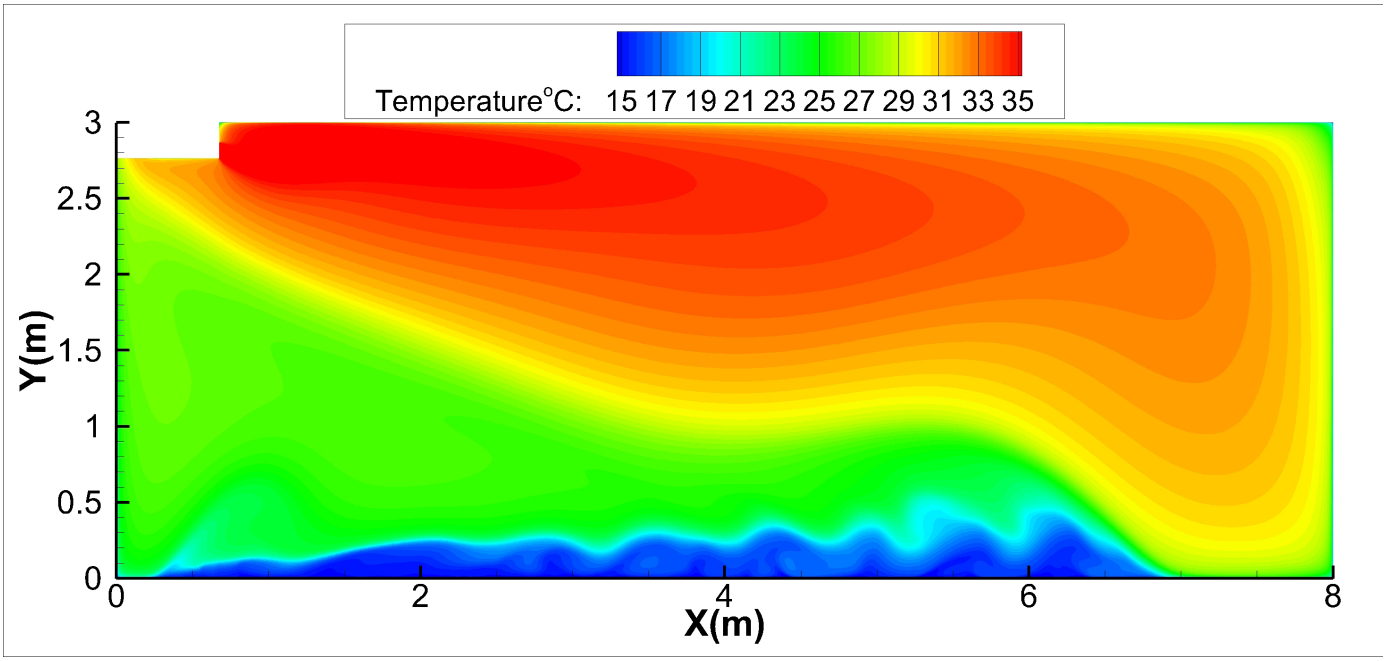

18K-Ceiling installation:

Discharge Angle 60°

Heating airflow velocity distributions

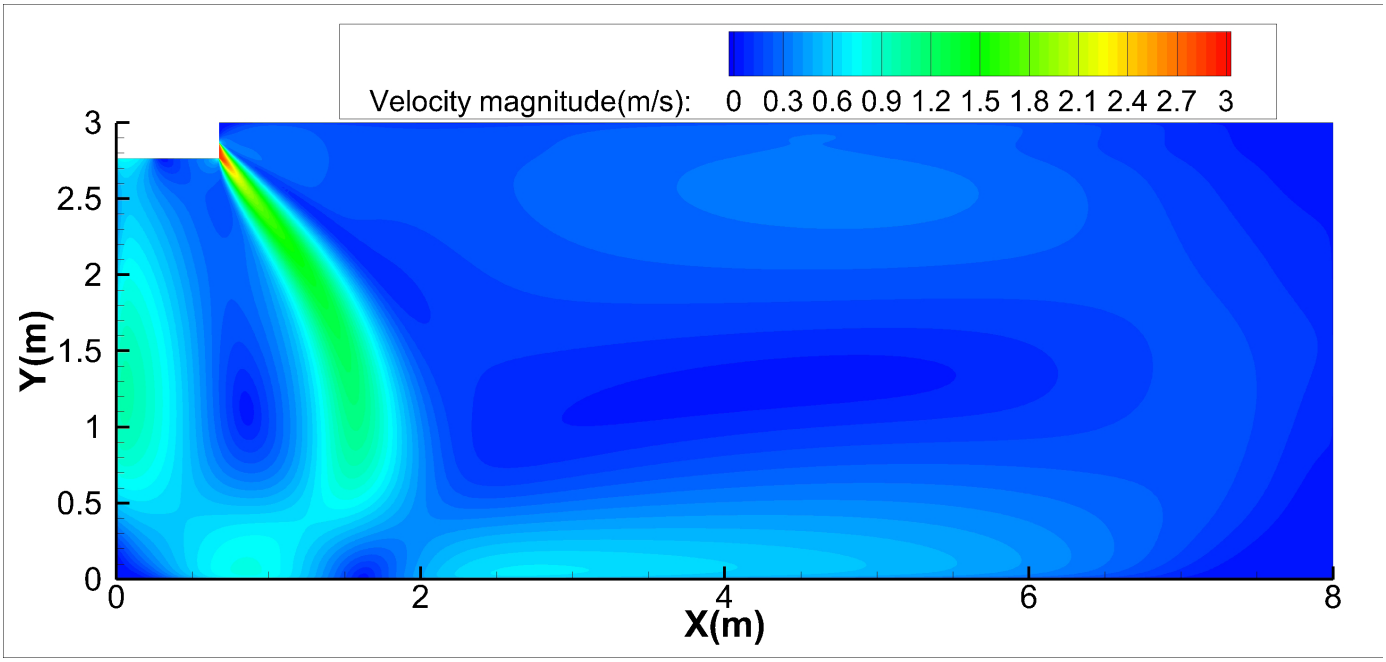

Heating temperature distributions

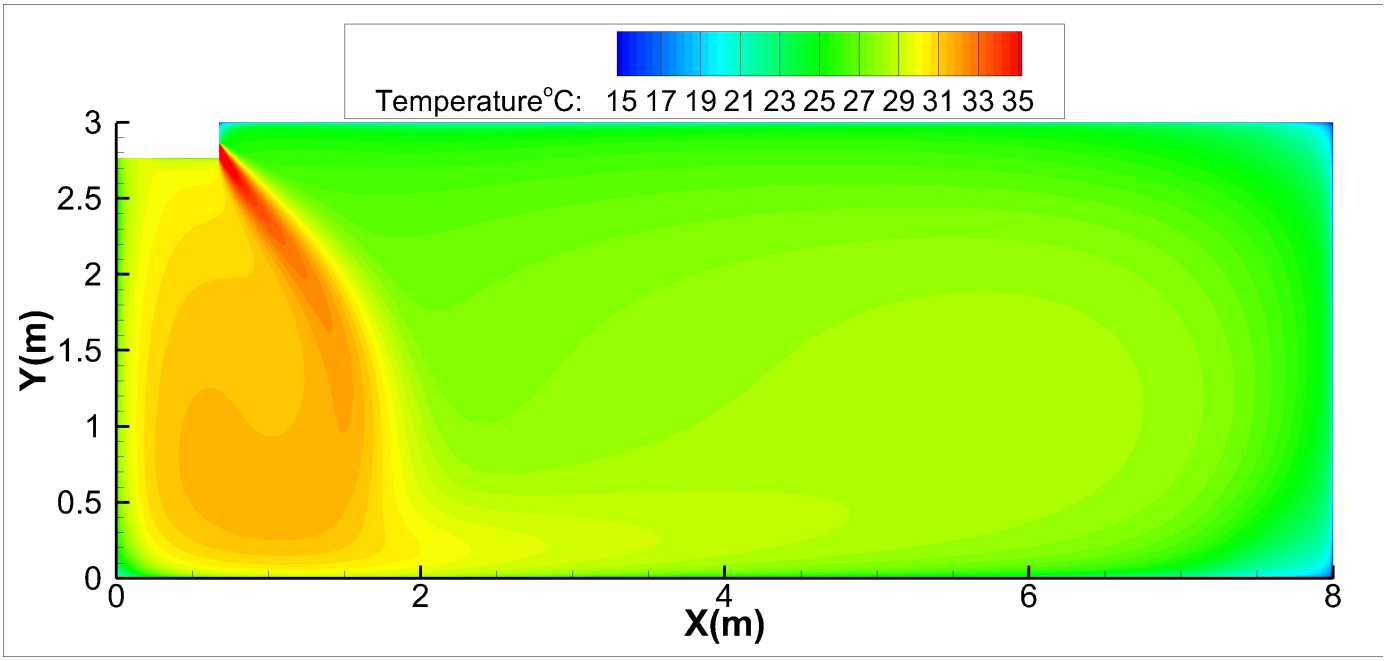

18K-Floor installation:

Discharge Angle 30°

Cooling airflow velocity distributions

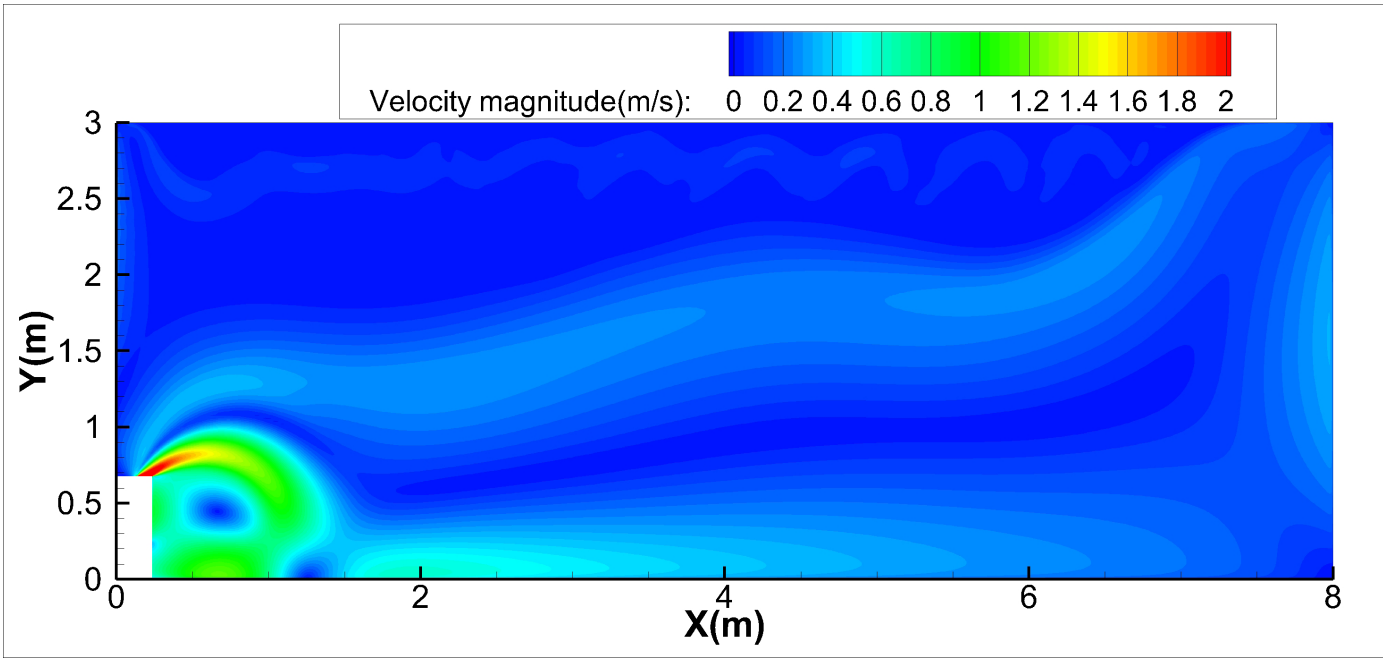

Cooling temperature distributions

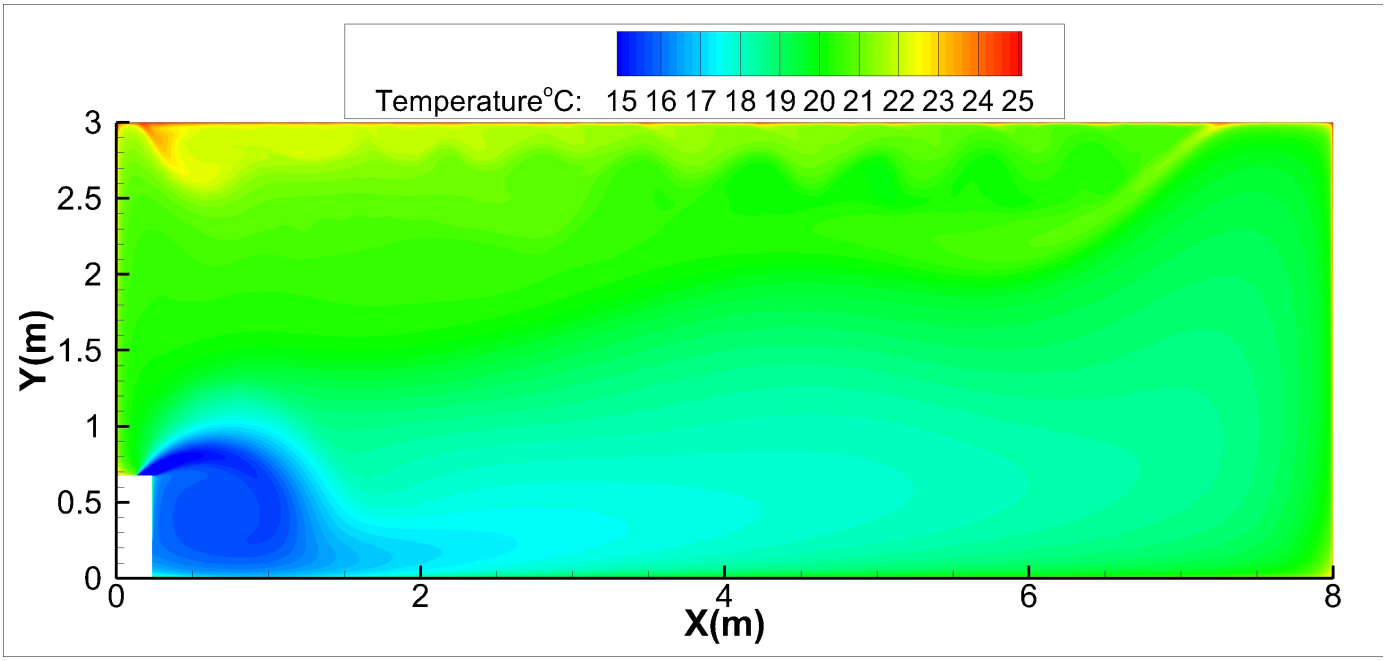

18K-Floor installation:

Discharge Angle 60°

Cooling airflow velocity distributions

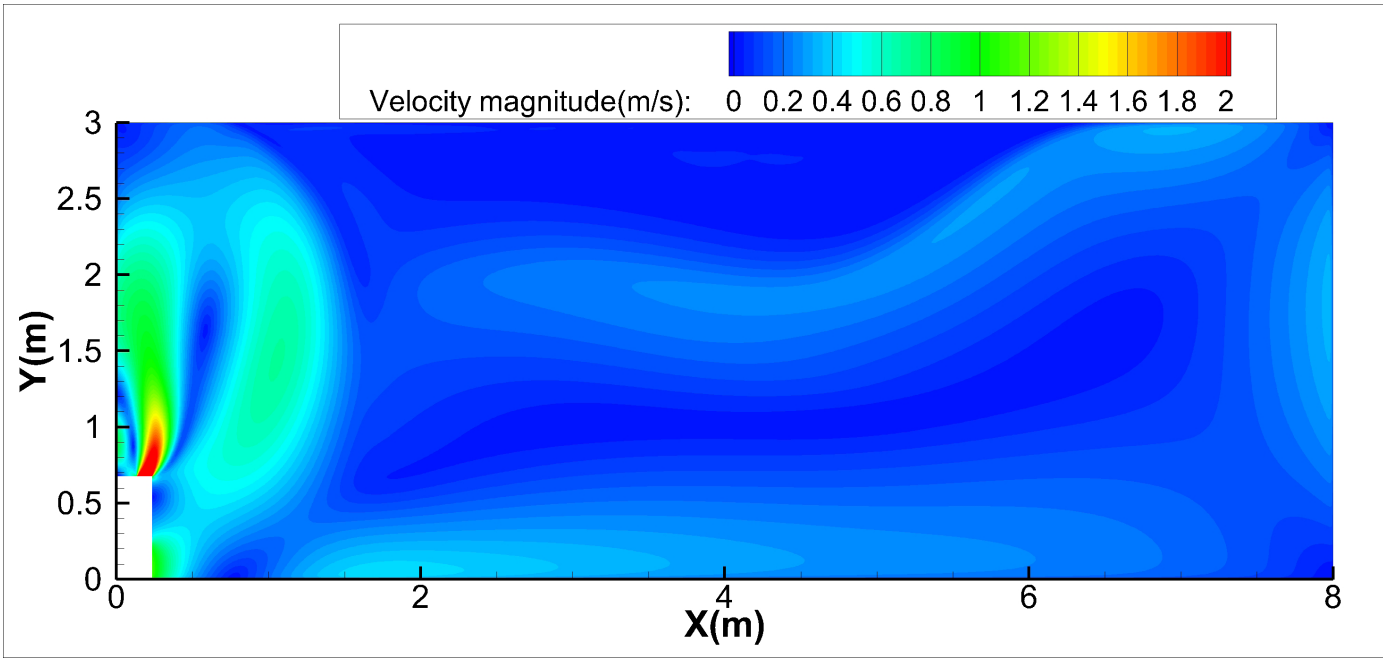

Cooling temperature distributions

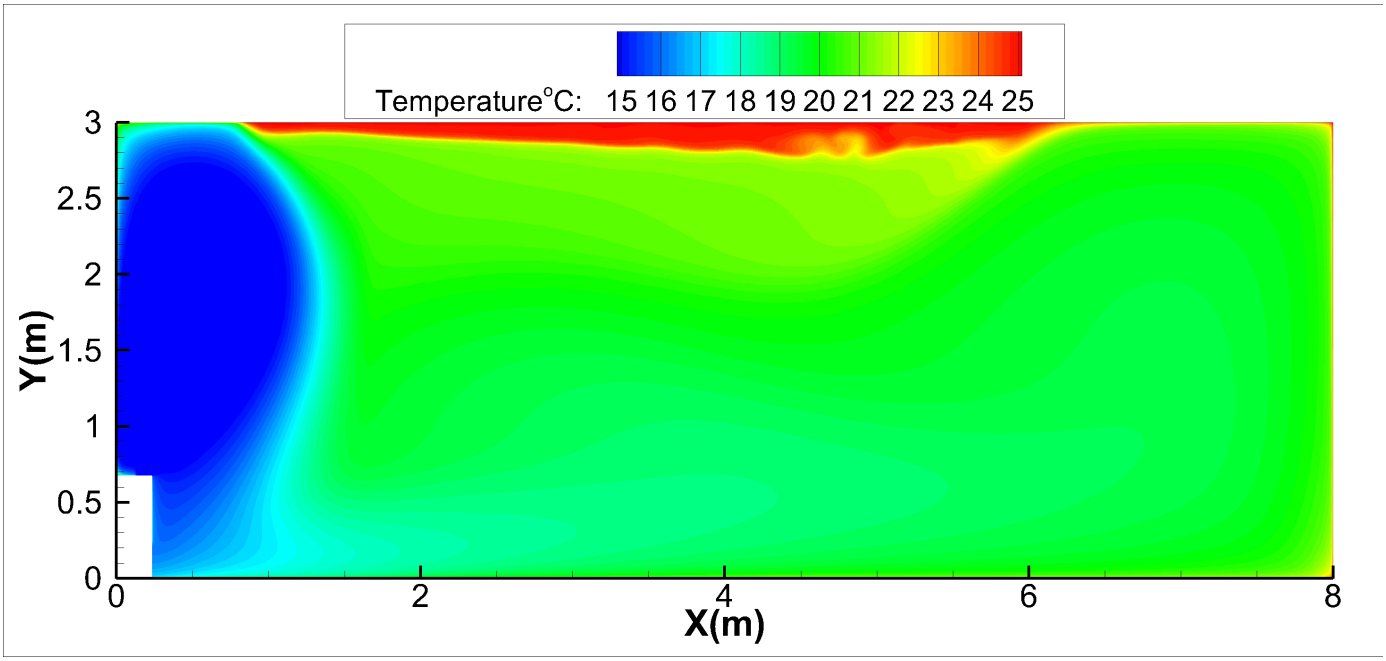

18K-Floor installation:

Discharge Angle 30°

Heating airflow velocity distributions

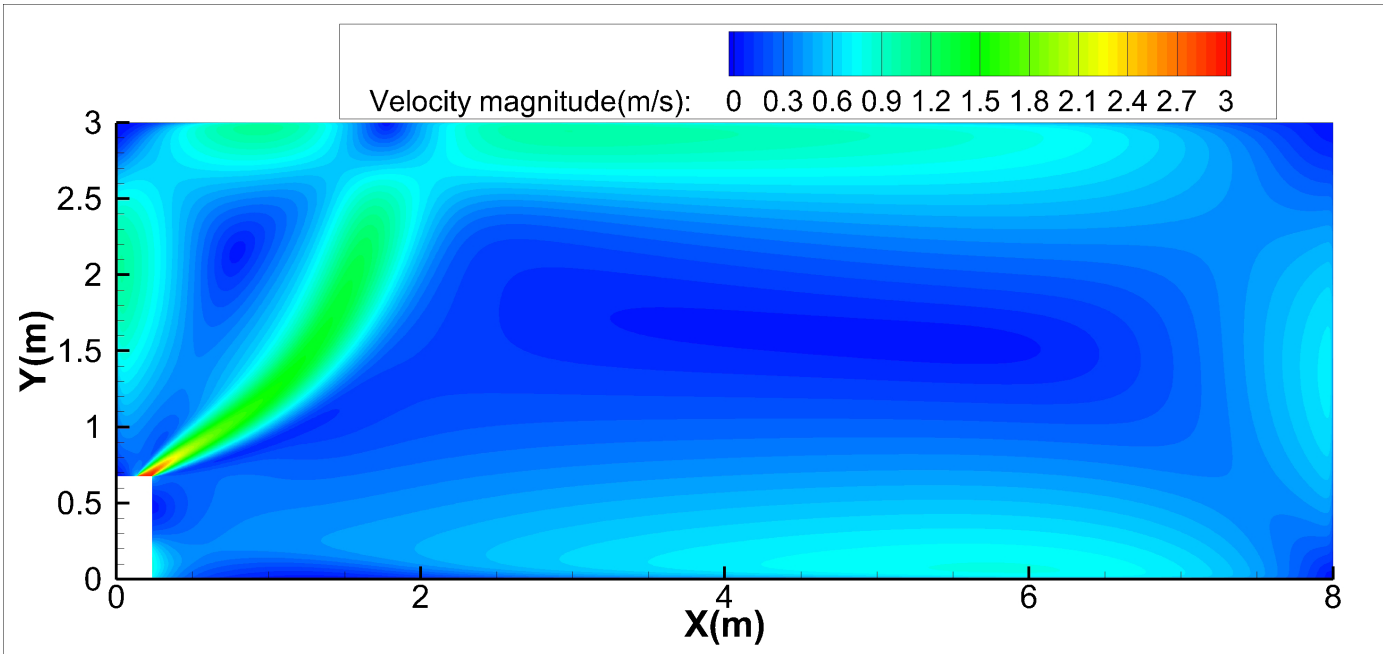

Heating temperature distributions

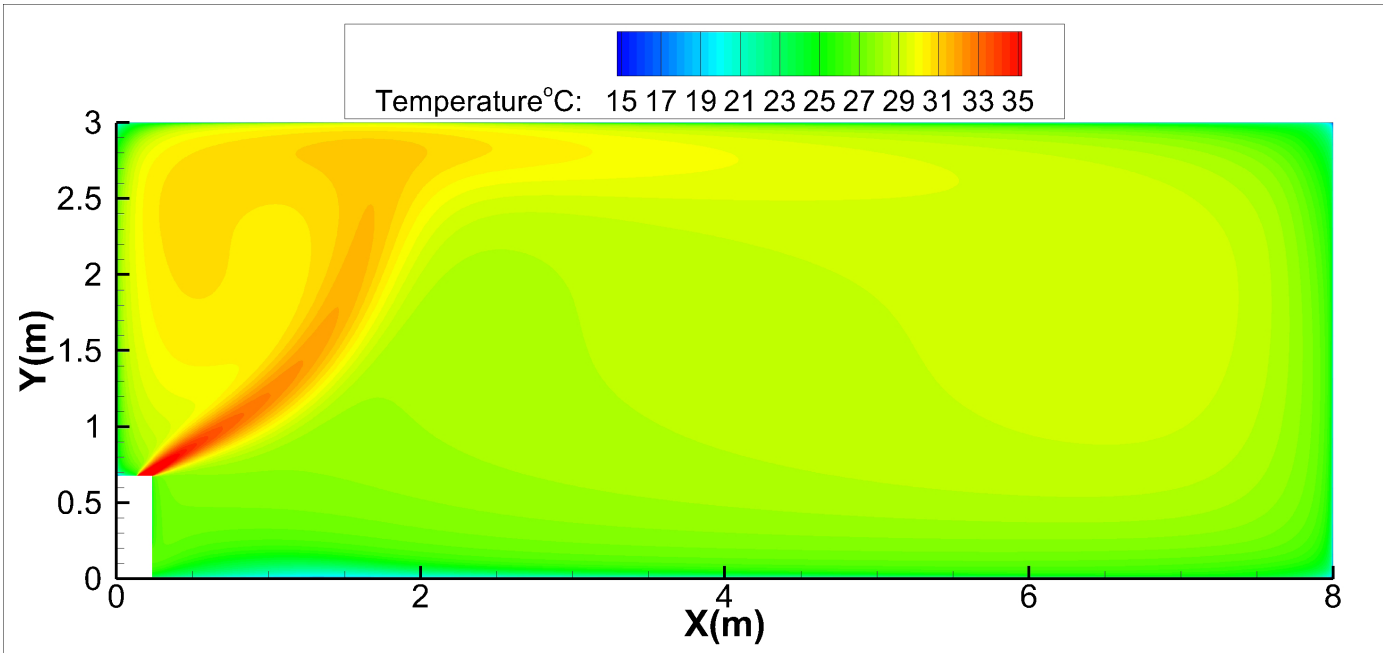

18K-Floor installation:

Discharge Angle 60°

Heating airflow velocity distributions

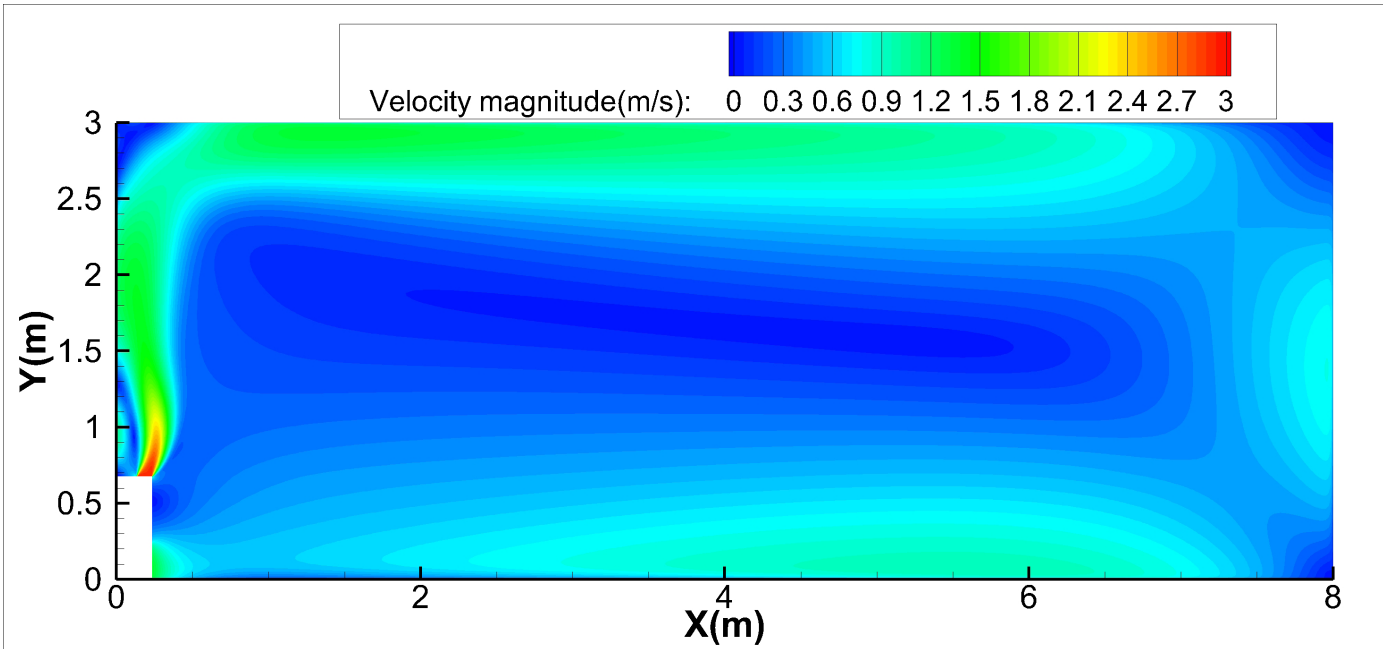

Heating temperature distributions

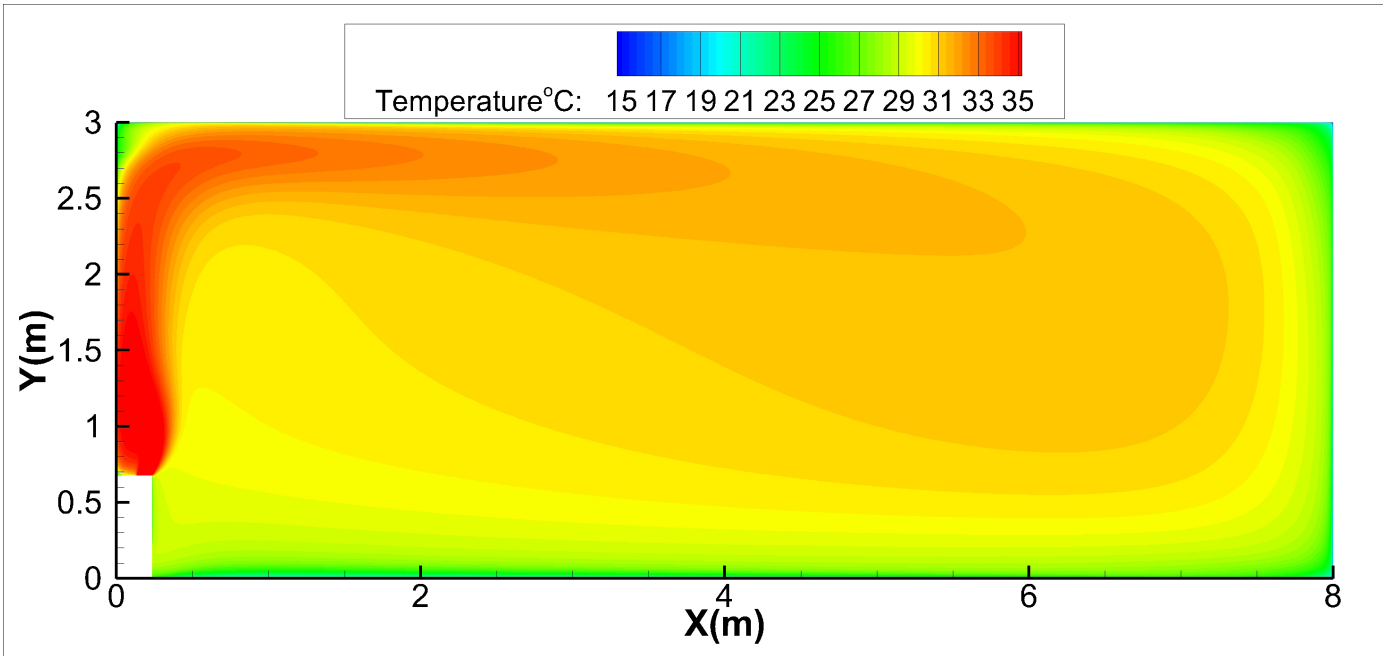

24K-Ceiling installation:

Discharge Angle 30°

Cooling airflow velocity distributions

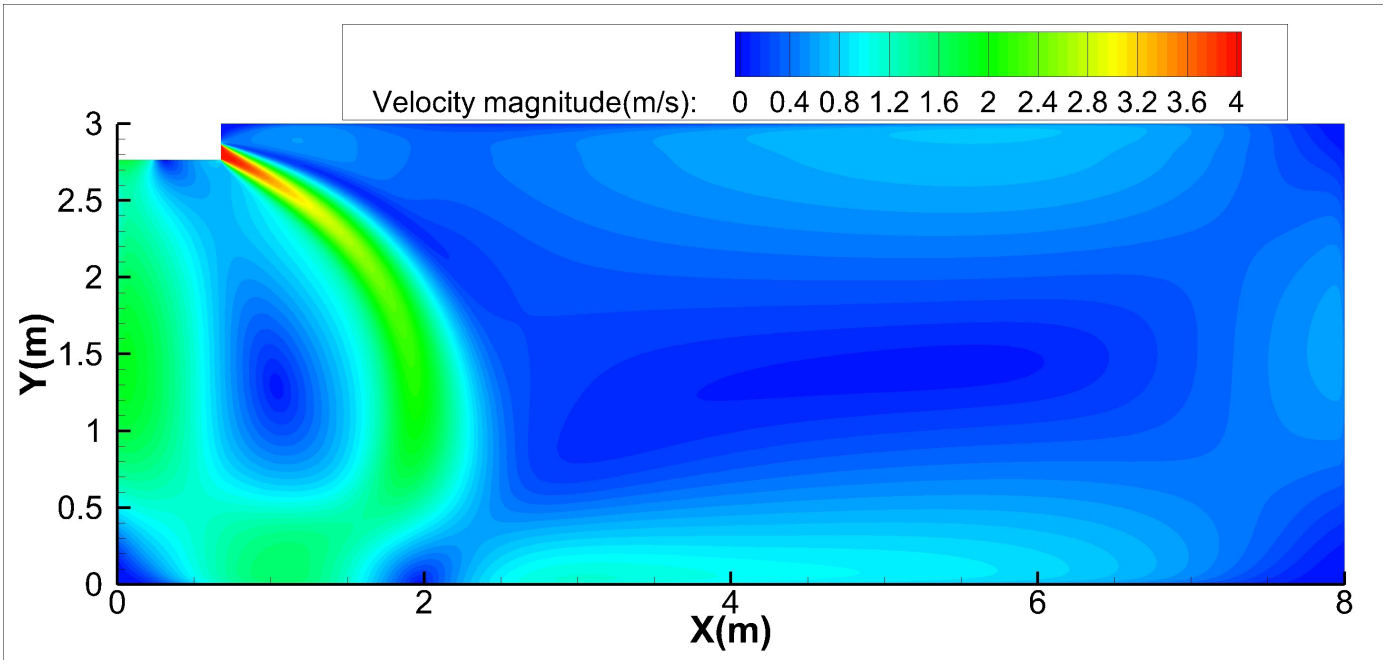

Cooling temperature distributions

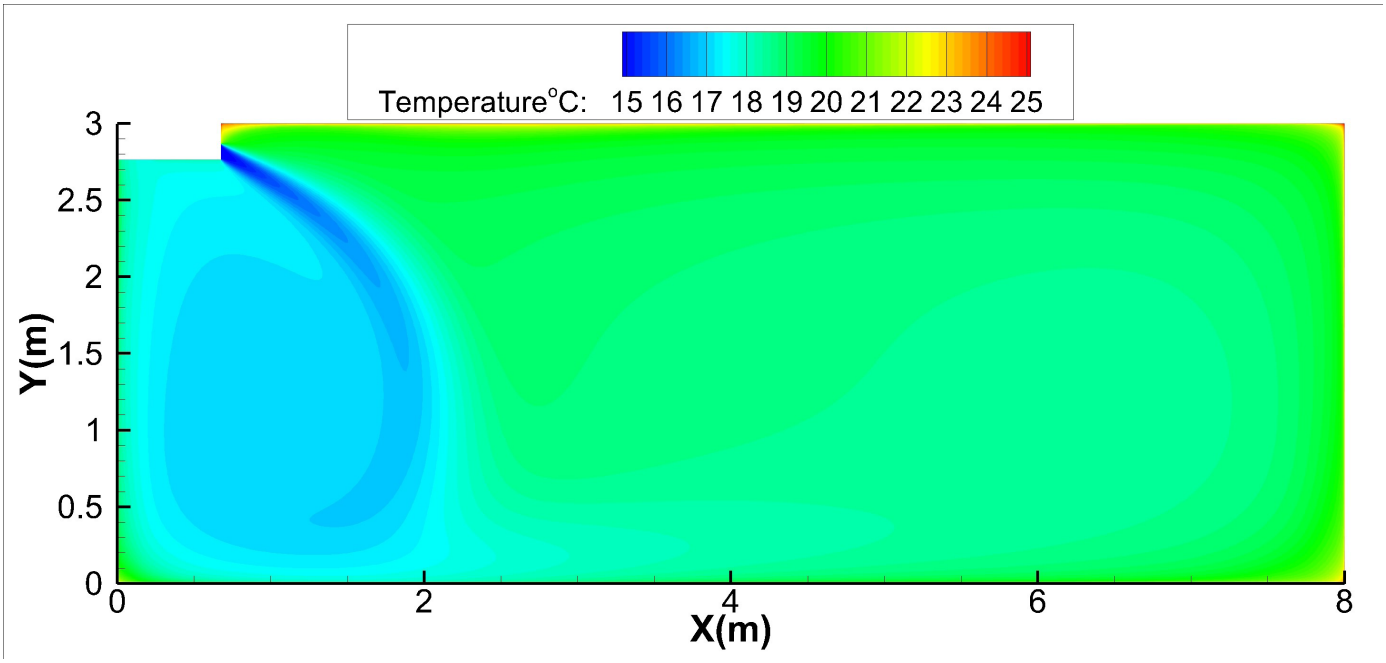

24K-Ceiling installation:

Discharge Angle 60°

Cooling airflow velocity distributions

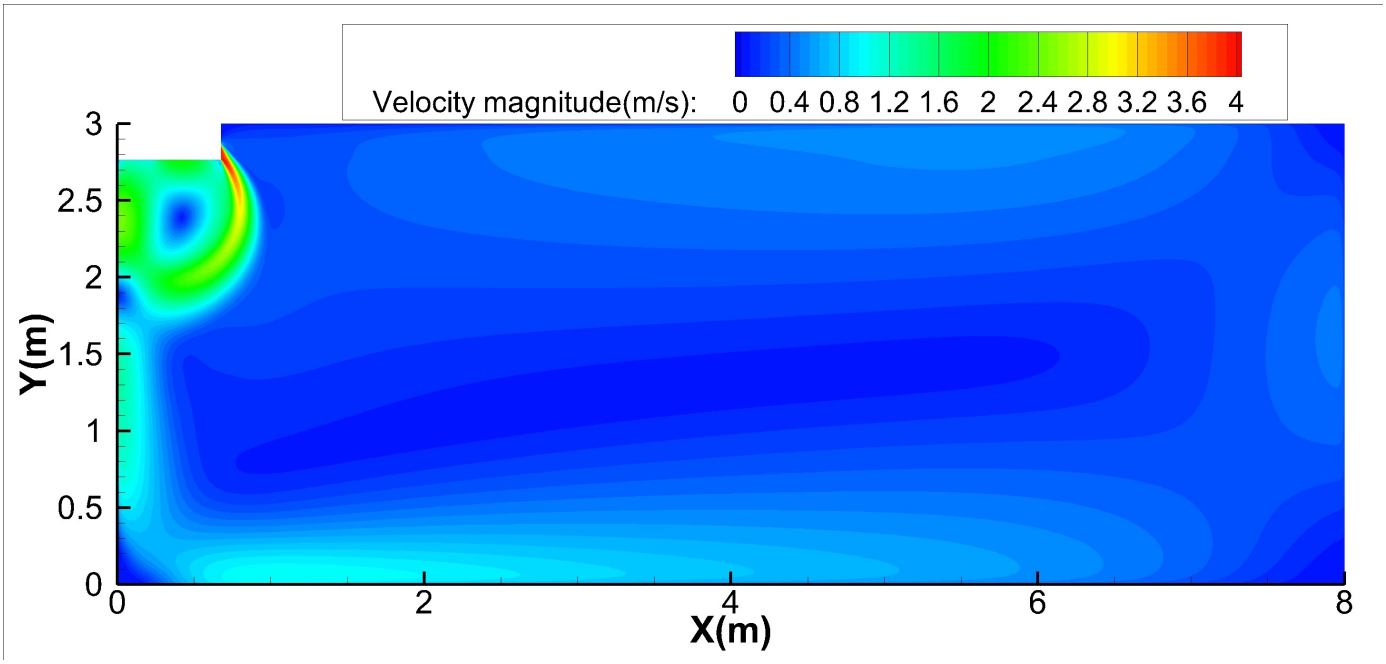

Cooling temperature distributions

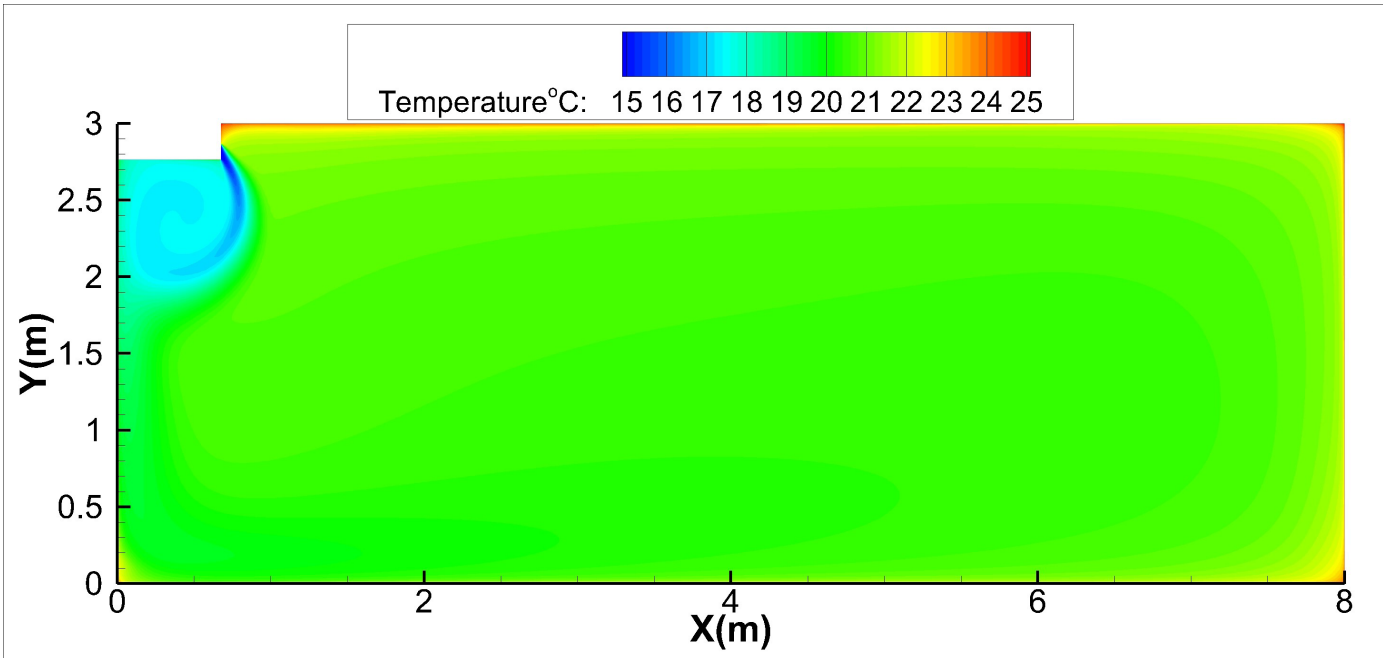

24K-Ceiling installation:

Discharge Angle 30°

Heating airflow velocity distributions

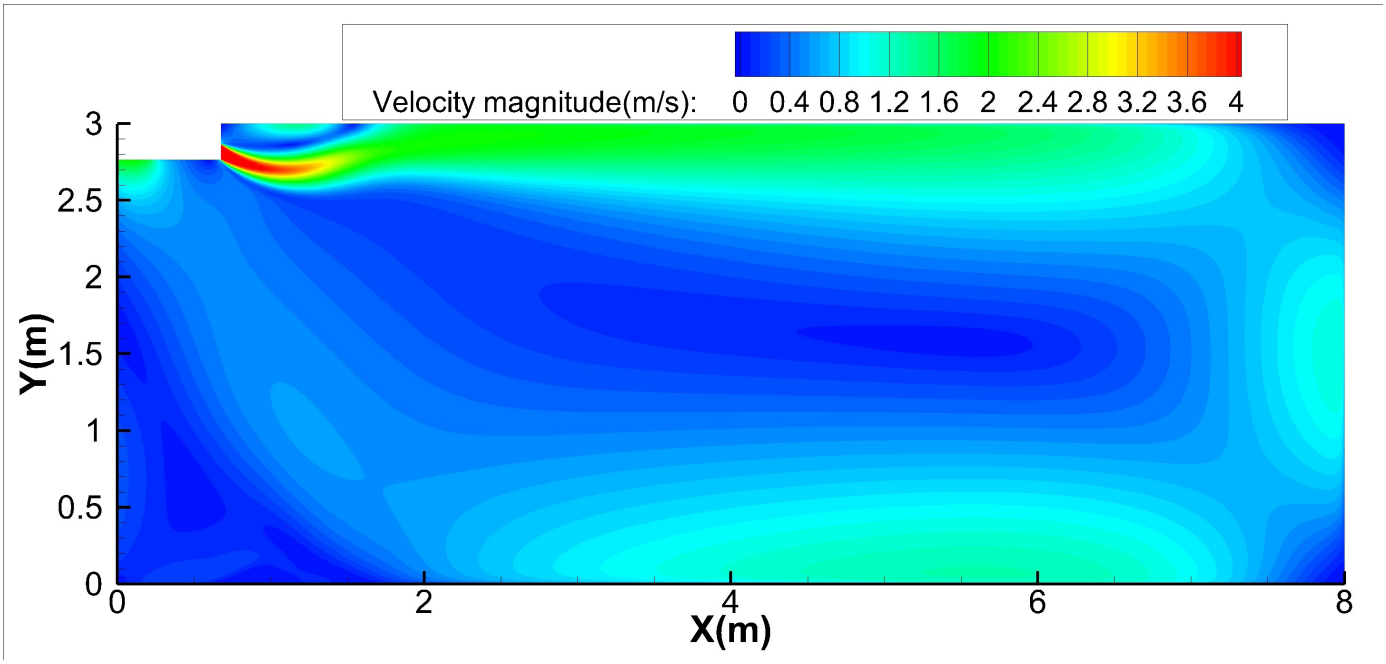

Heating temperature distributions

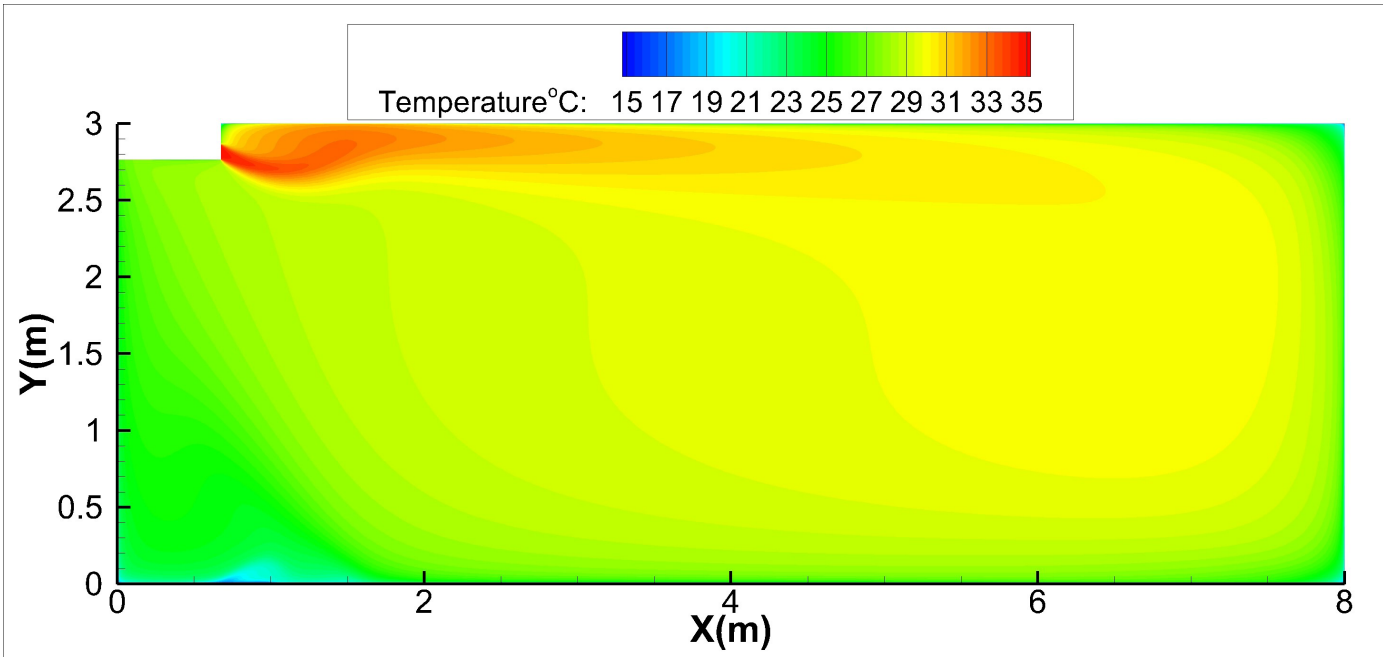

24K-Ceiling installation:

Discharge Angle 60°

Heating airflow velocity distributions

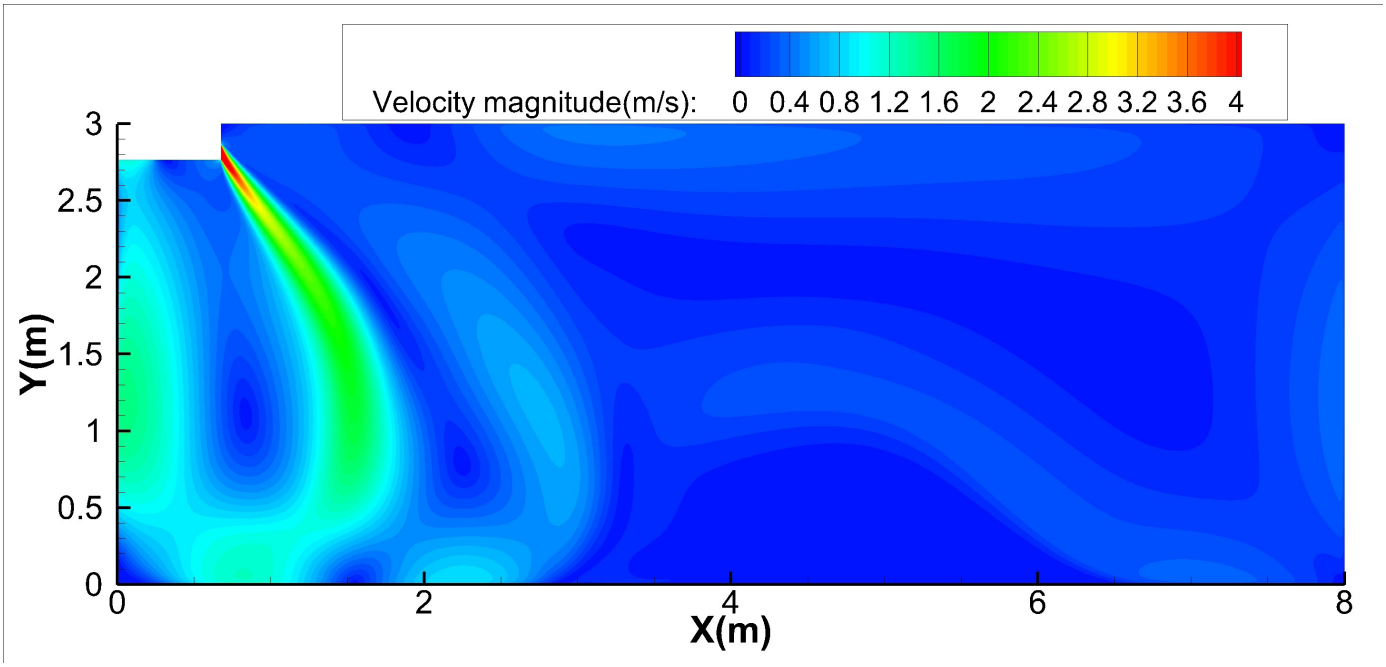

Heating temperature distributions

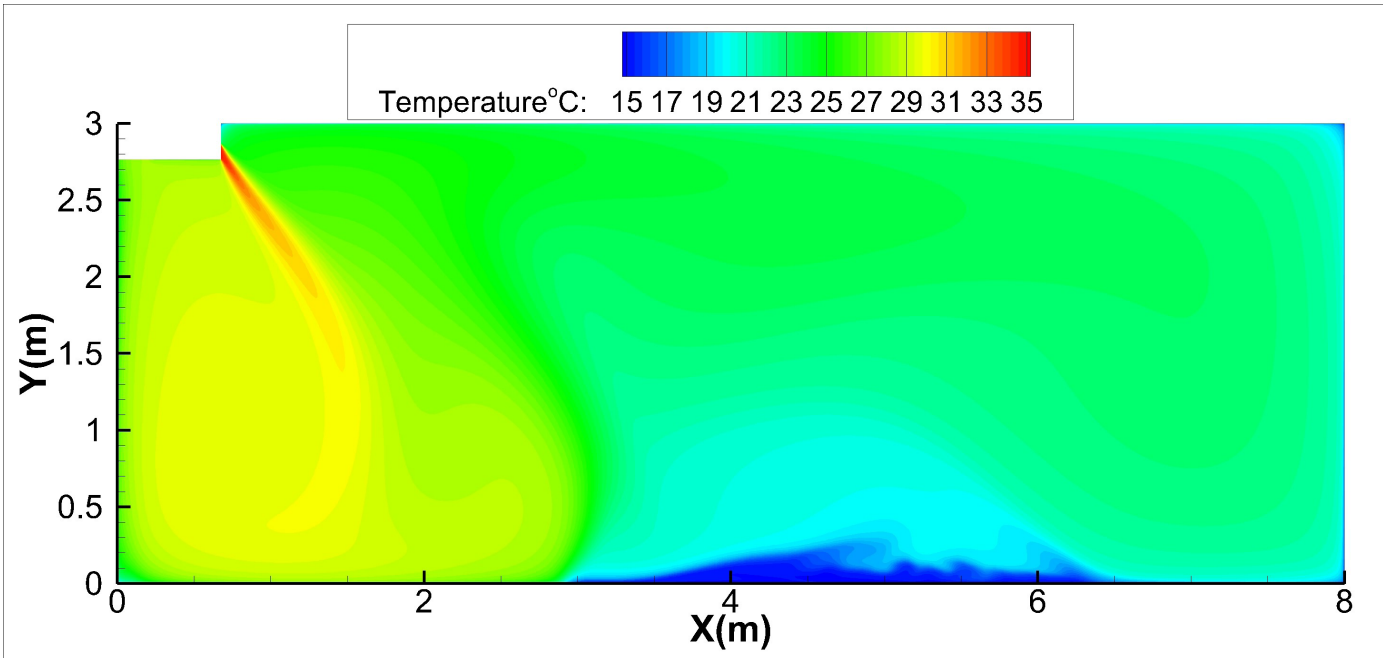

24K-Floor installation:

Discharge Angle 30°

Cooling airflow velocity distributions

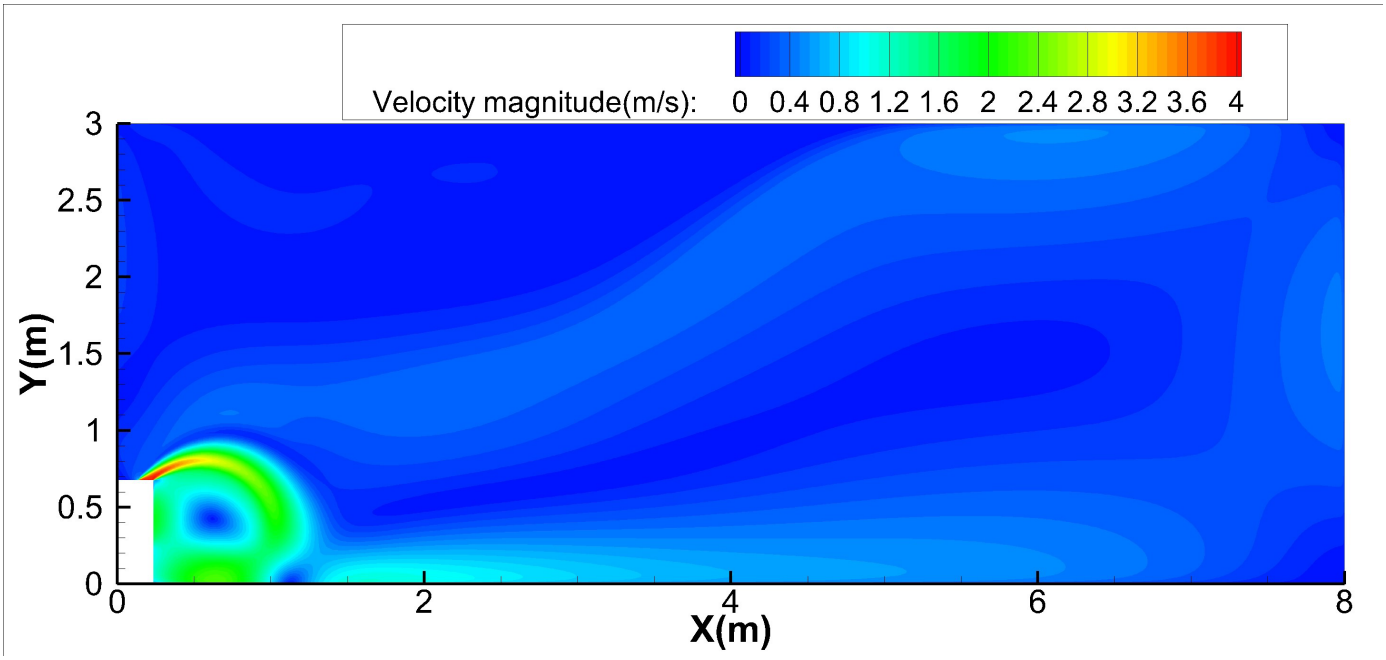

Cooling temperature distributions

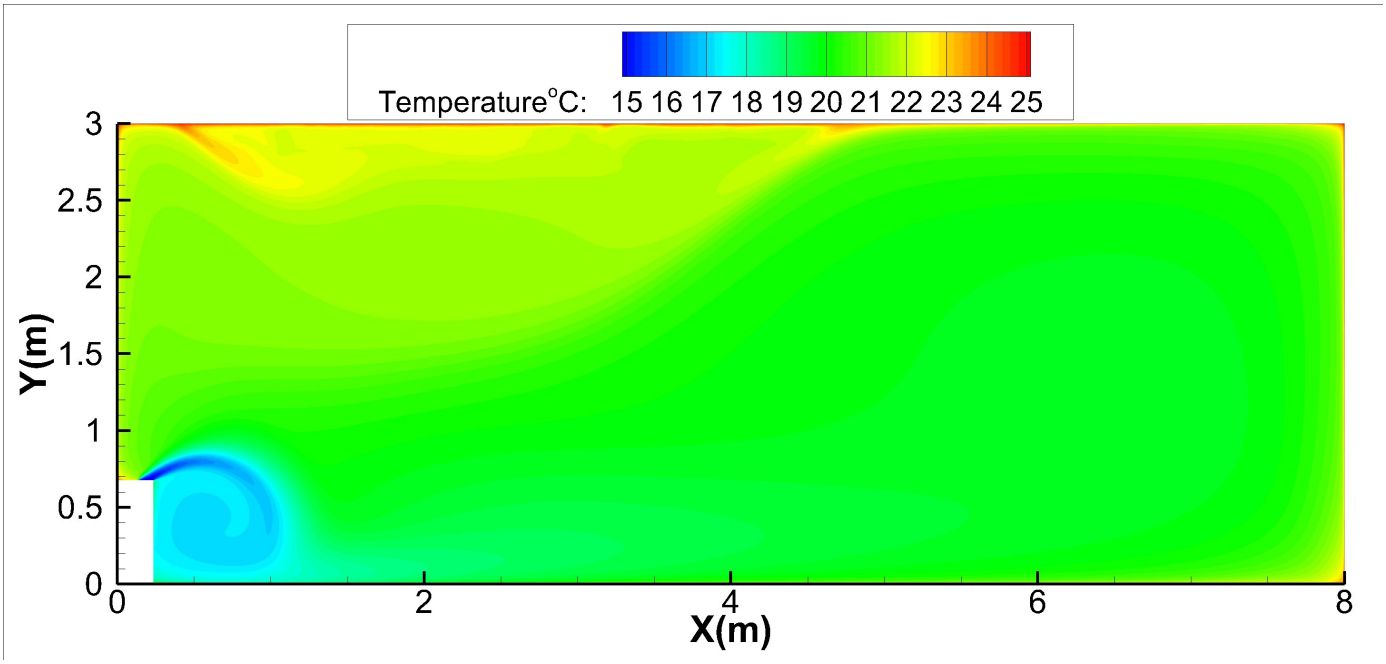

24K-Floor installation:

Discharge Angle 60°

Cooling airflow velocity distributions

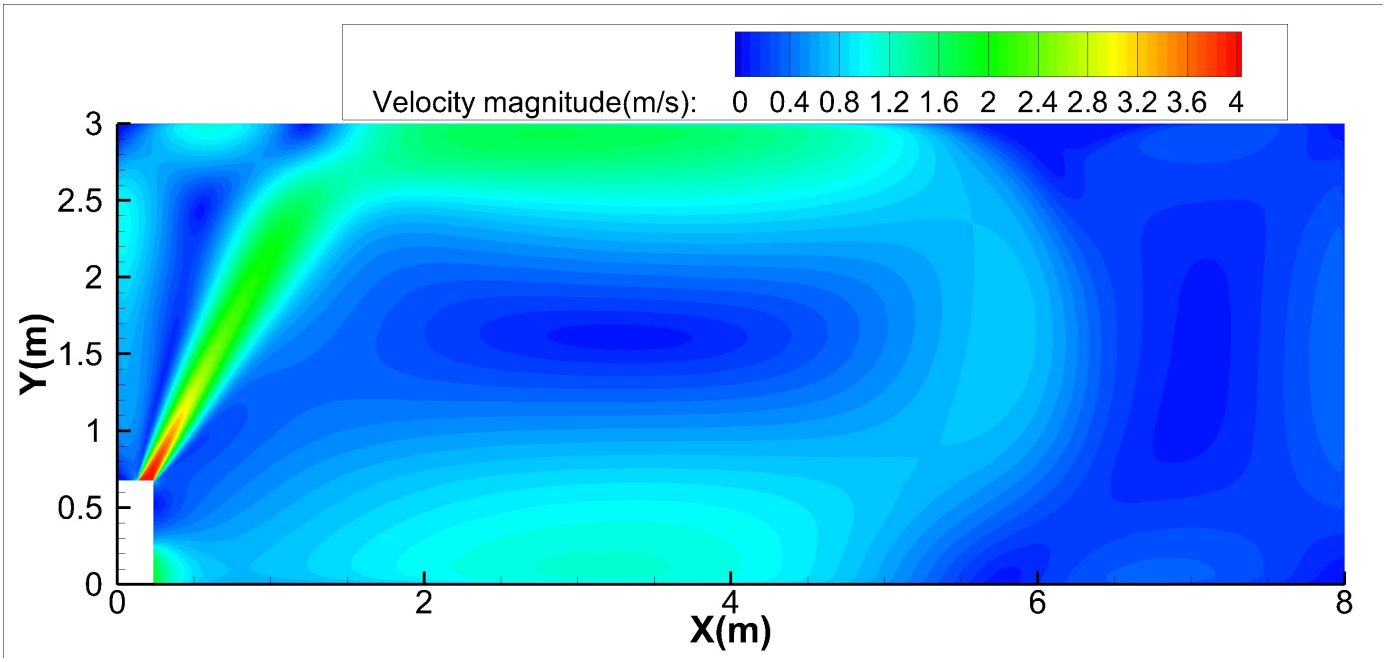

Cooling temperature distributions

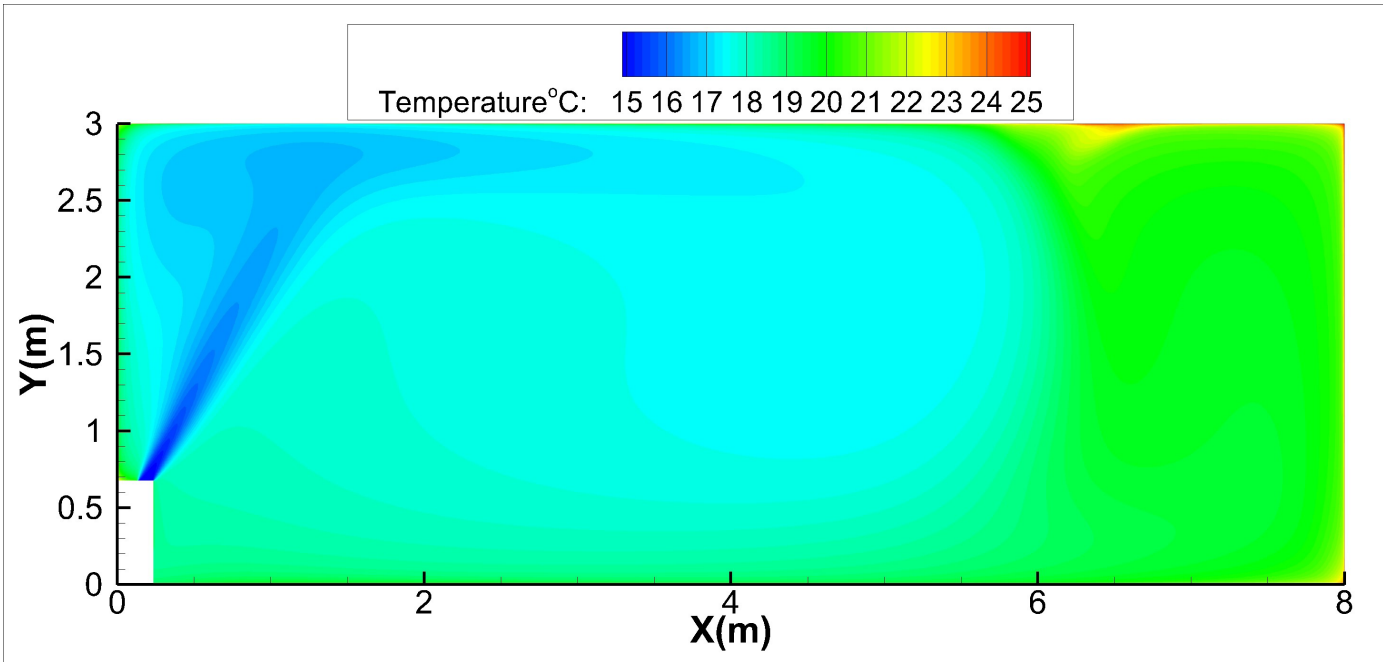

24K-Floor installation:

Discharge Angle 30°

Heating airflow velocity distributions

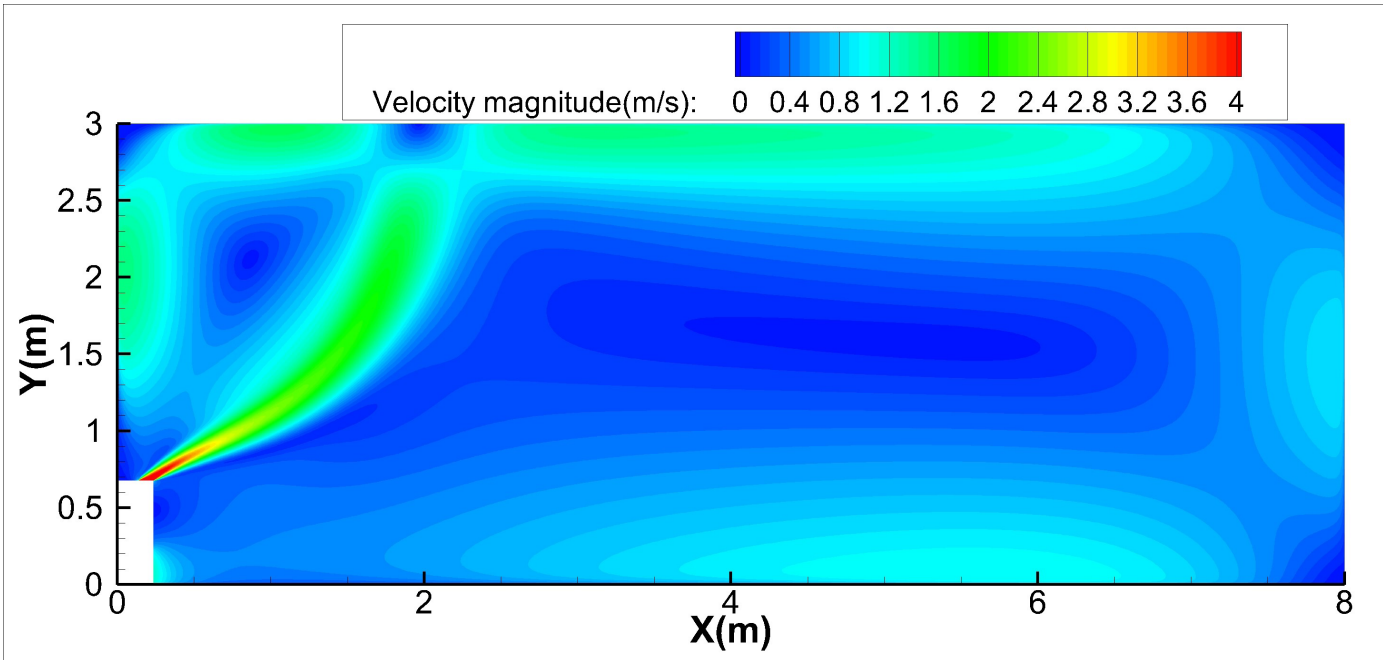

Heating temperature distributions

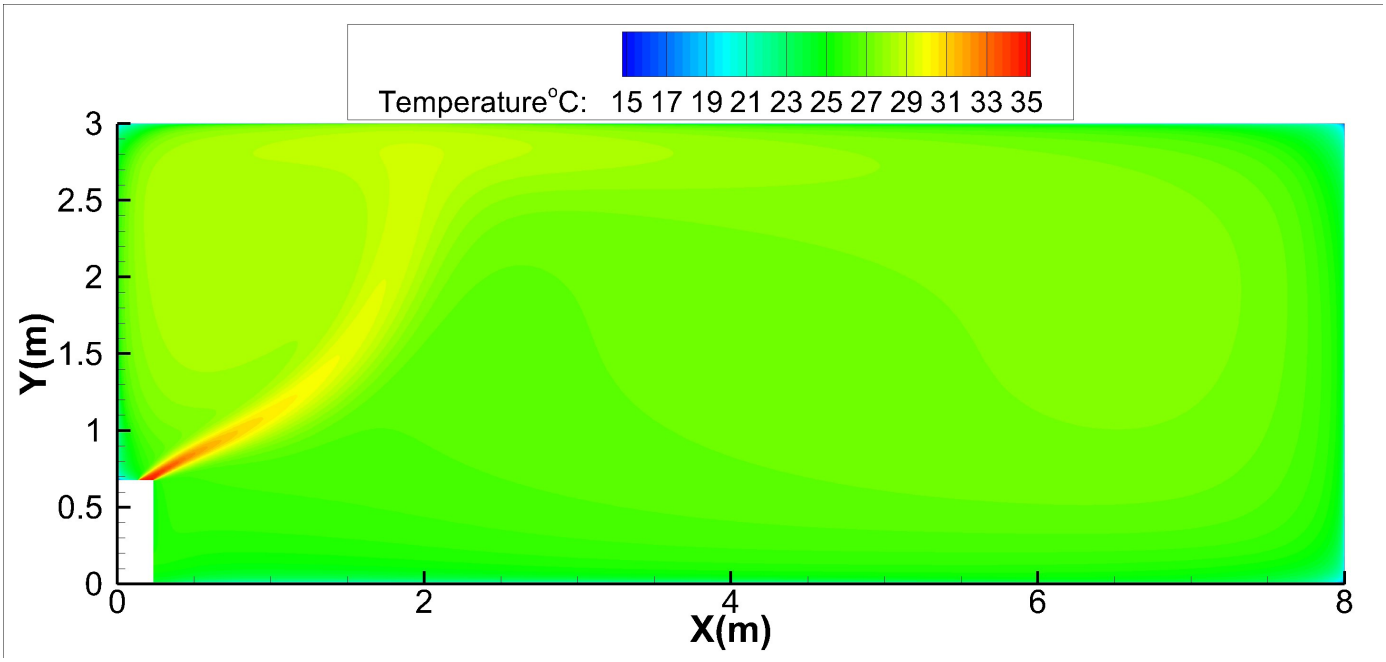

24K-Floor installation:

Discharge Angle 60°

Heating airflow velocity distributions

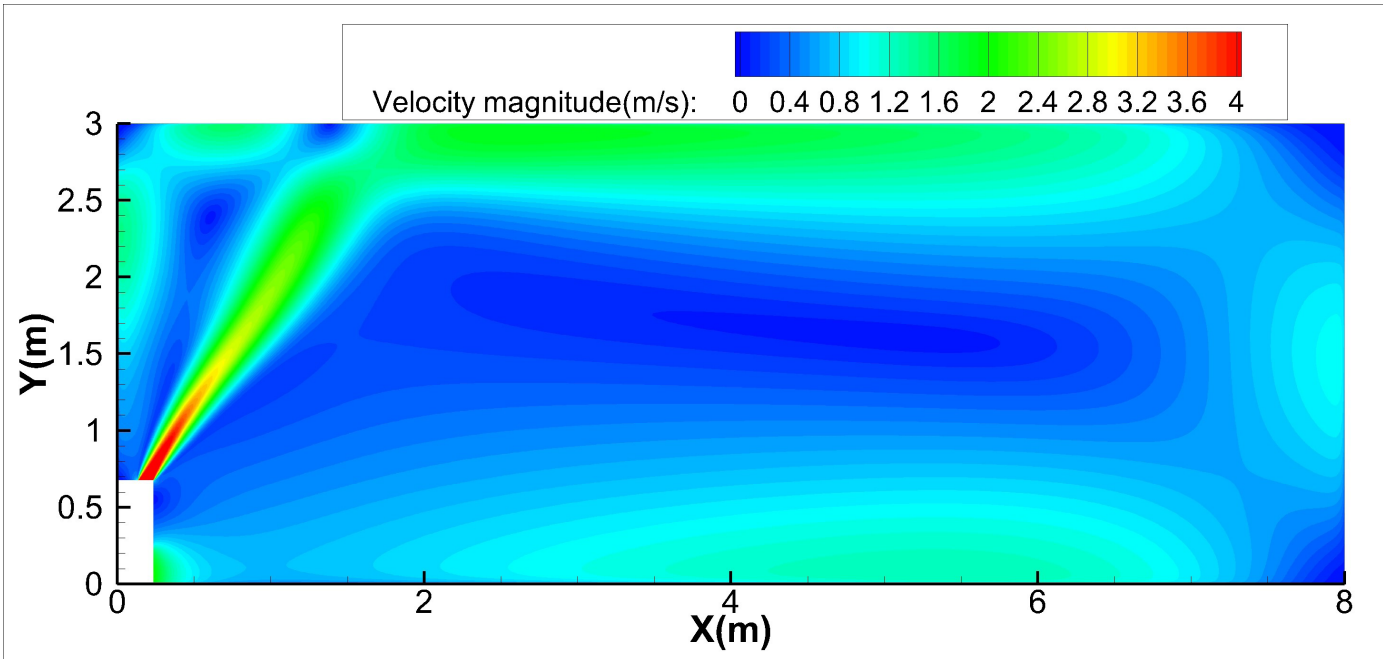

Heating temperature distributions

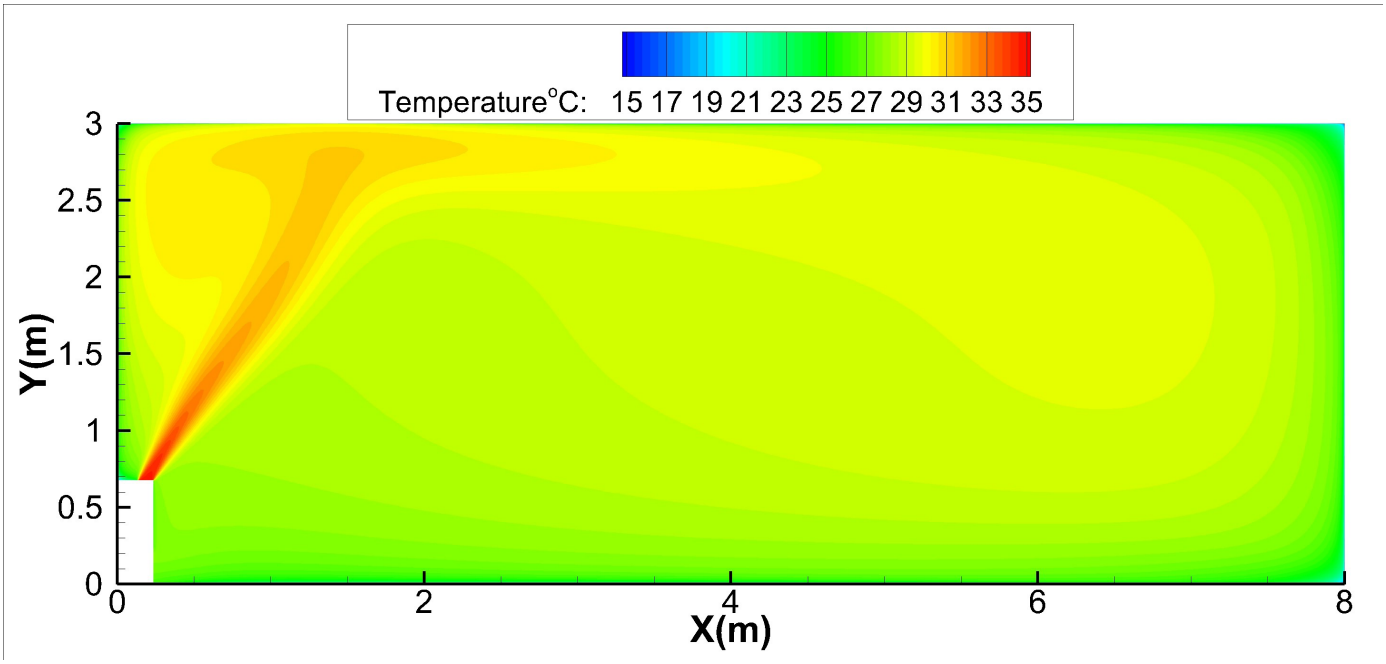

30K-Ceiling installation:

Discharge Angle 30°

Cooling airflow velocity distributions

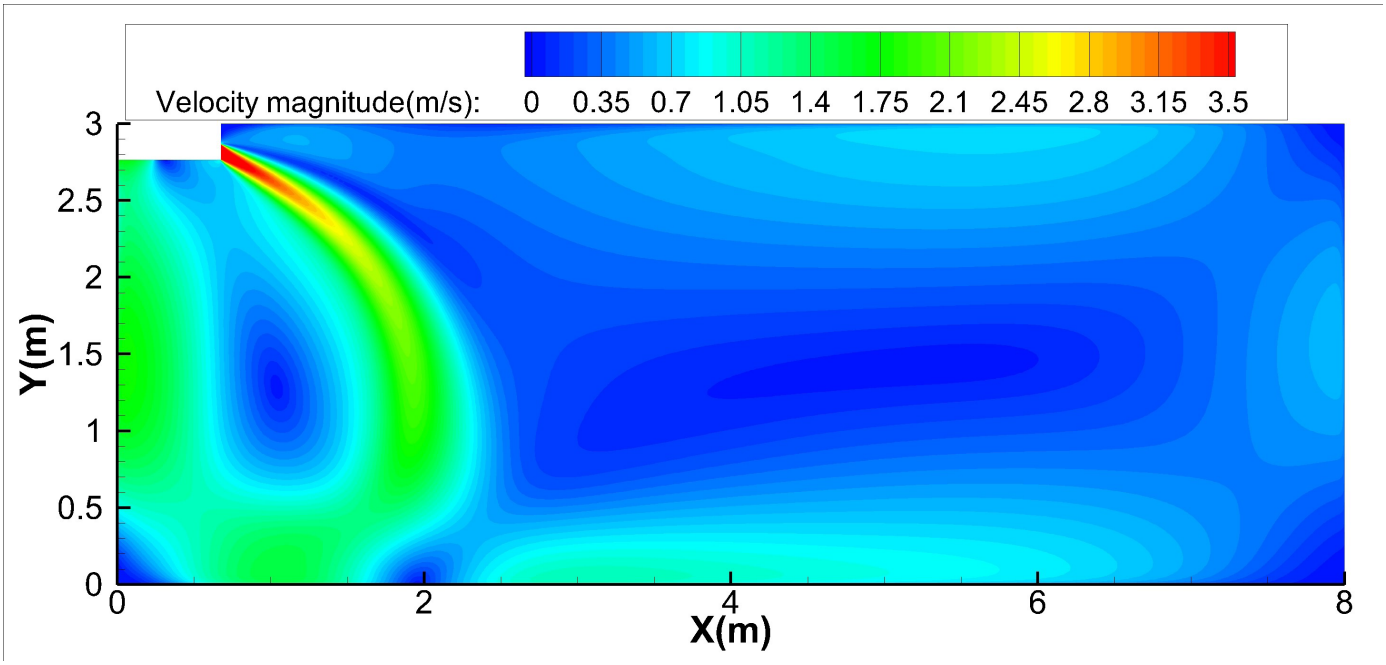

Cooling temperature distributions

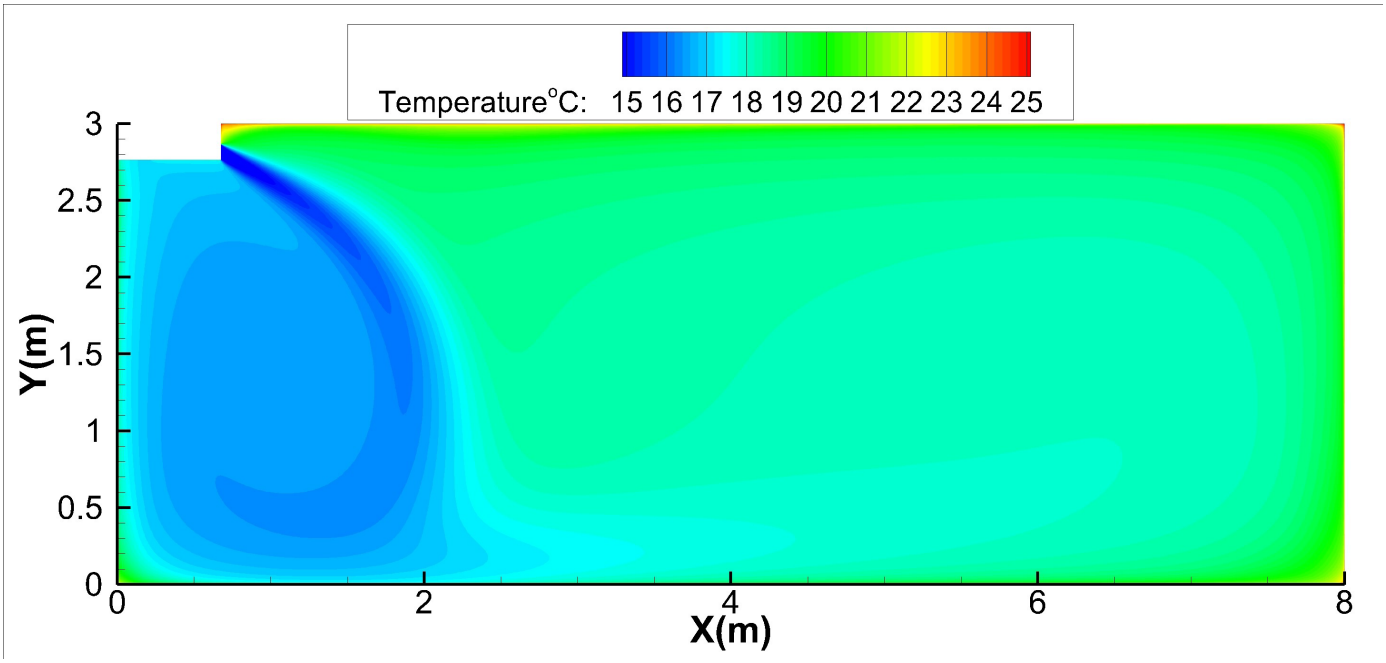

30K-Ceiling installation:

Discharge Angle 60°

Cooling airflow velocity distributions

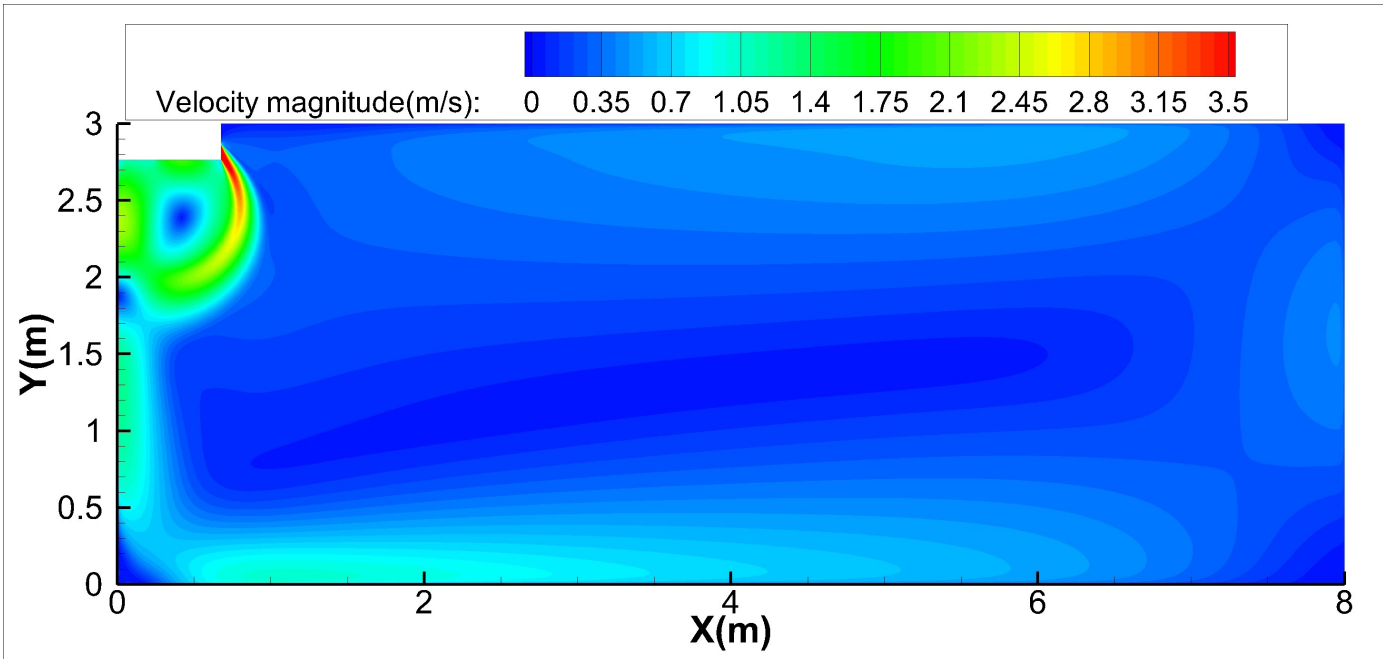

Cooling temperature distributions

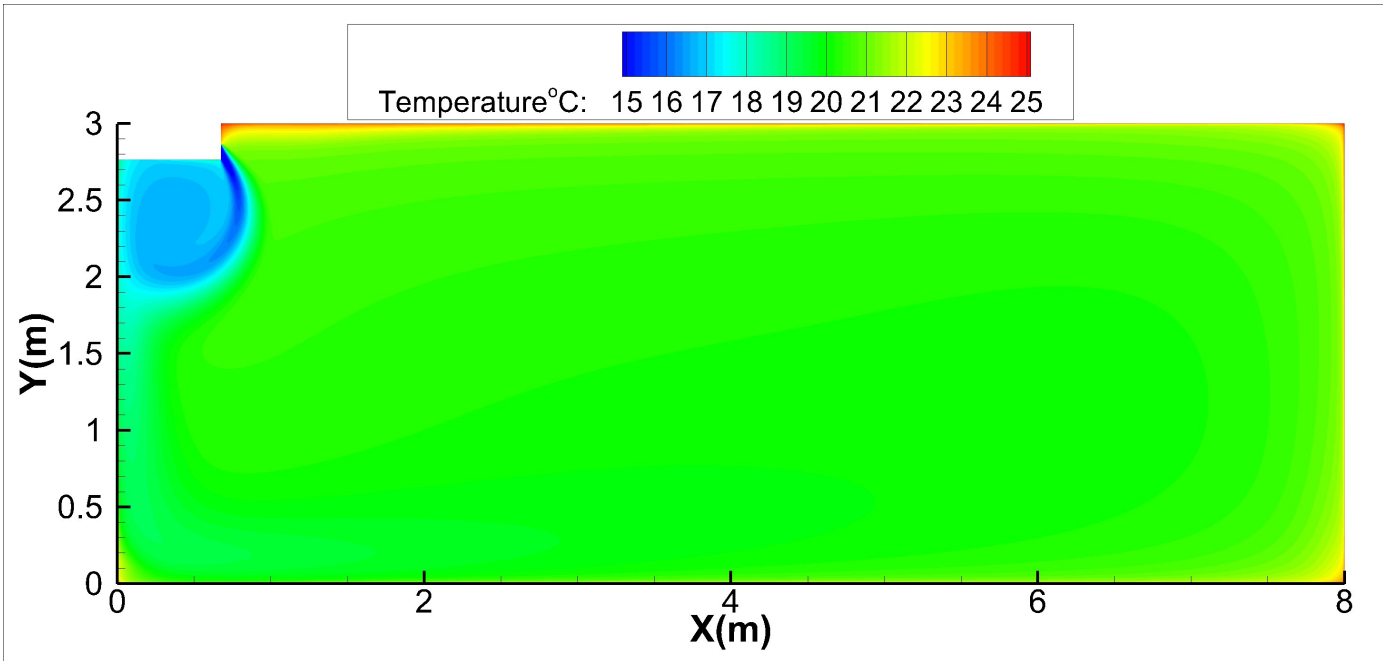

30K-Ceiling installation:

Discharge Angle 30°

Heating airflow velocity distributions

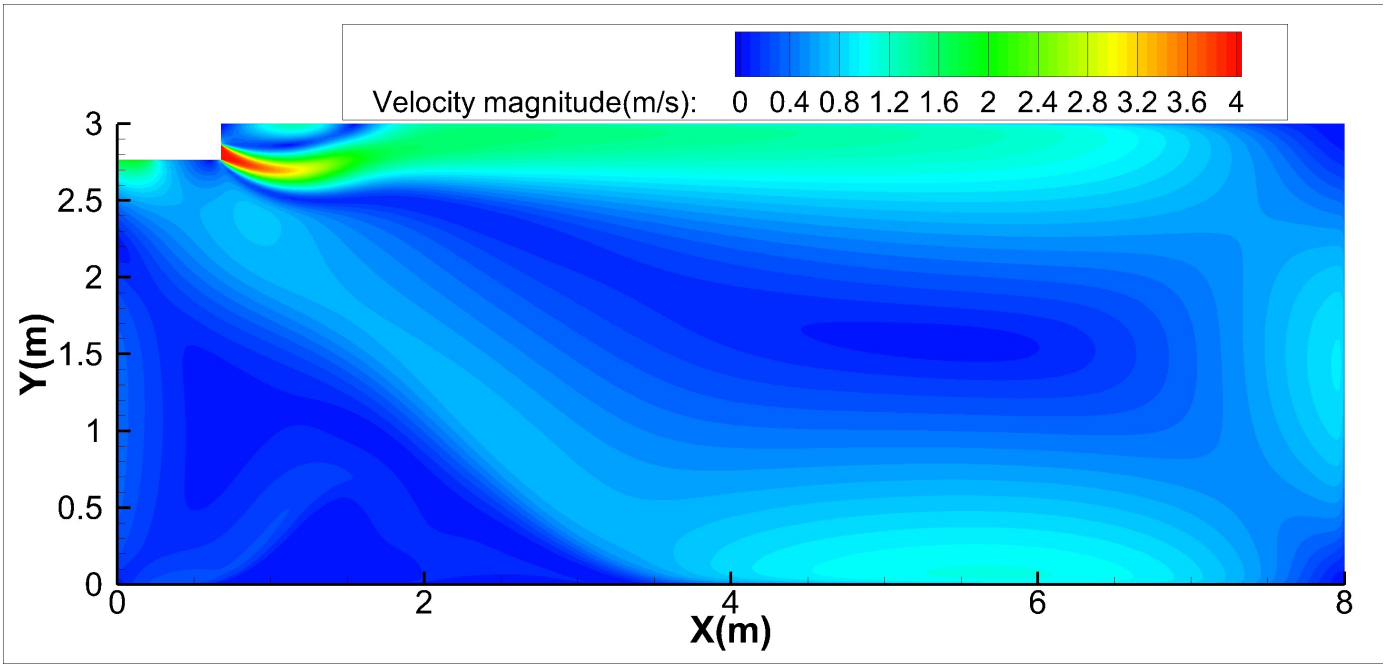

Heating temperature distributions

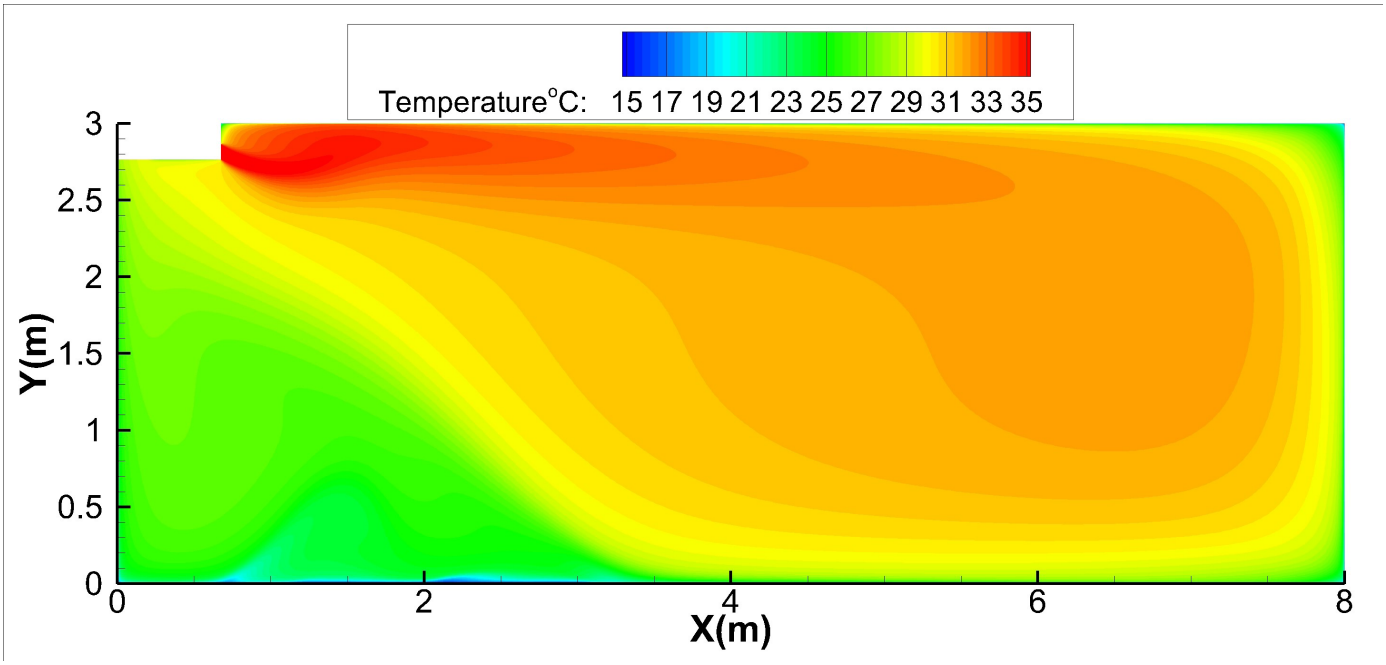

30K-Ceiling installation:

Discharge Angle 60°

Heating airflow velocity distributions

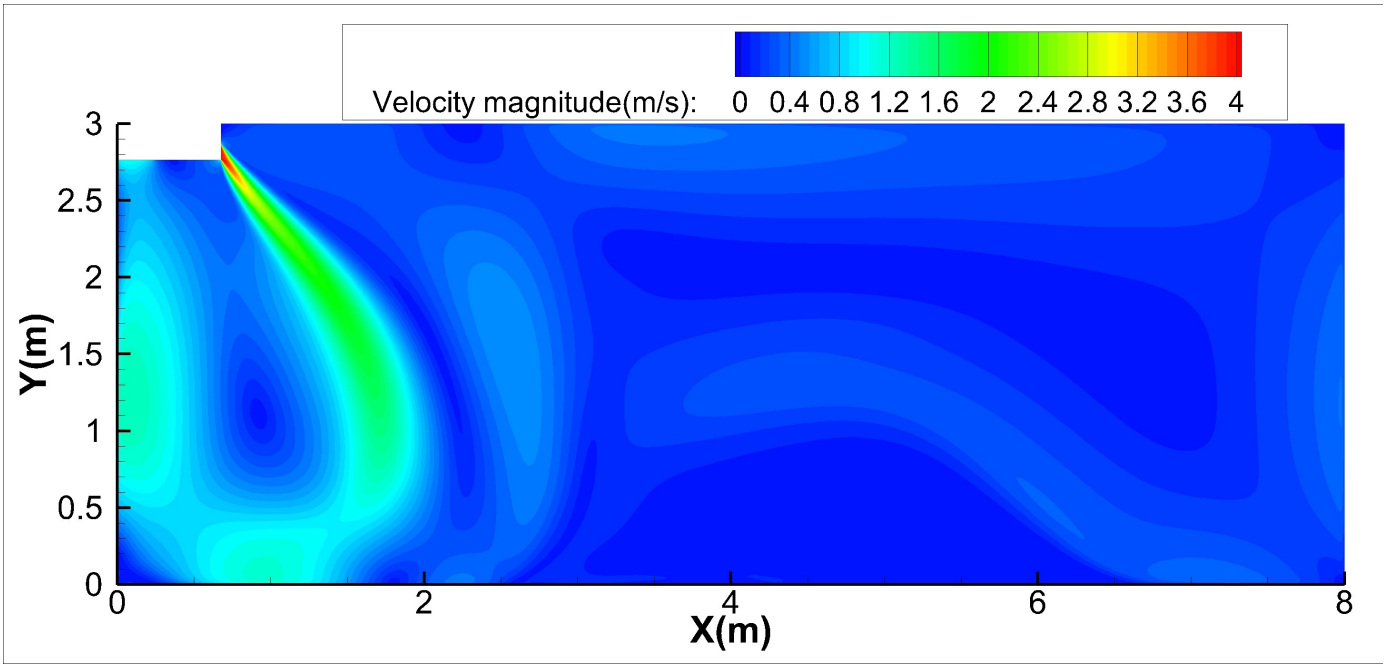

Heating temperature distributions

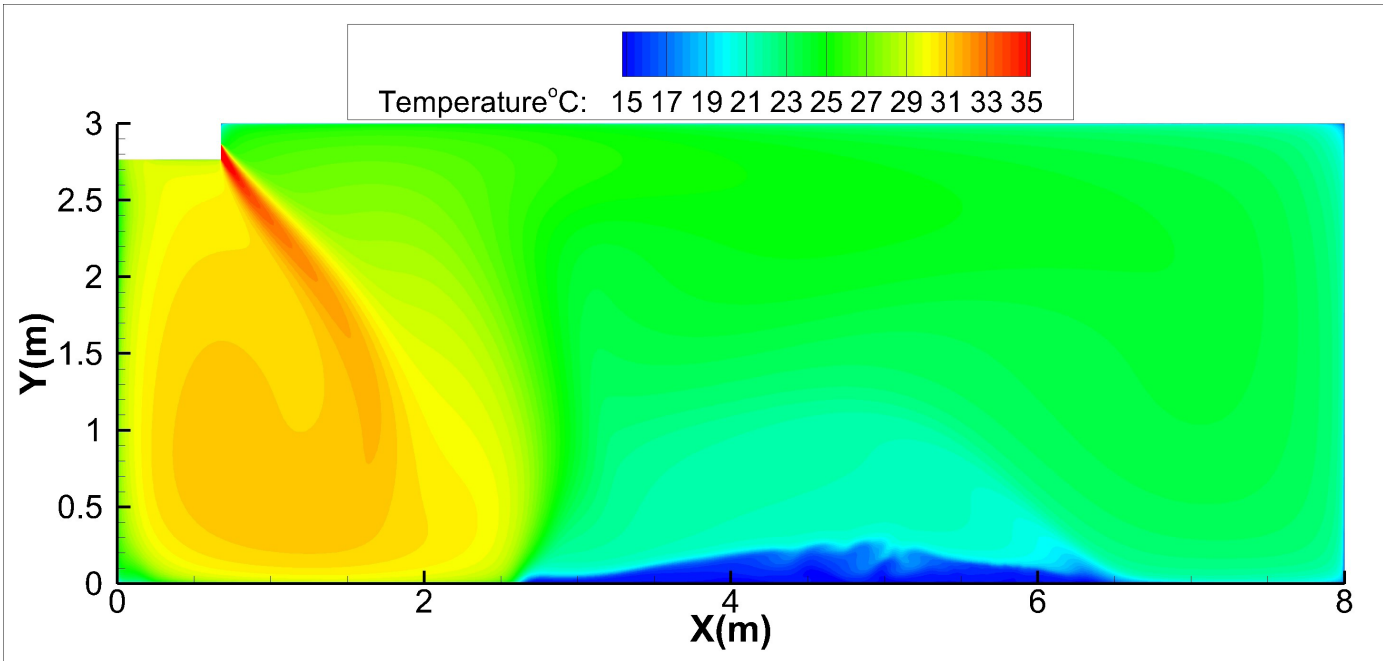

30K-Floor installation:

Discharge Angle 30°

Cooling airflow velocity distributions

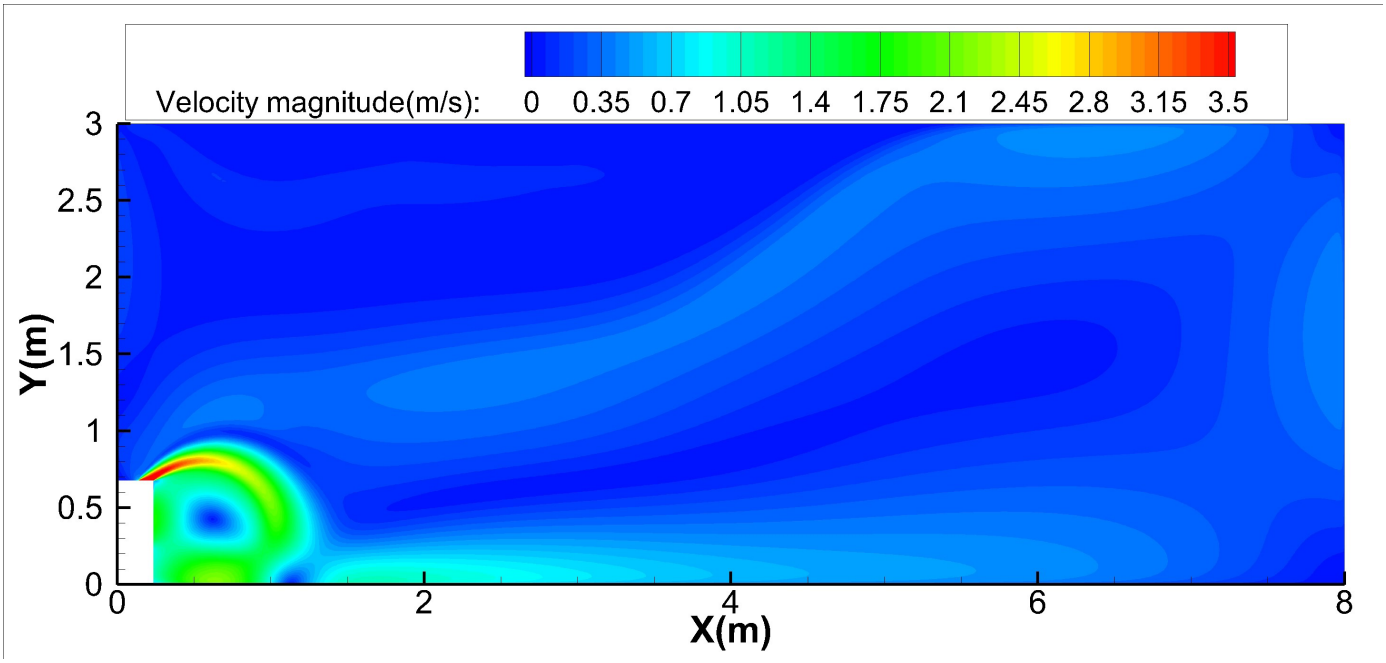

Cooling temperature distributions

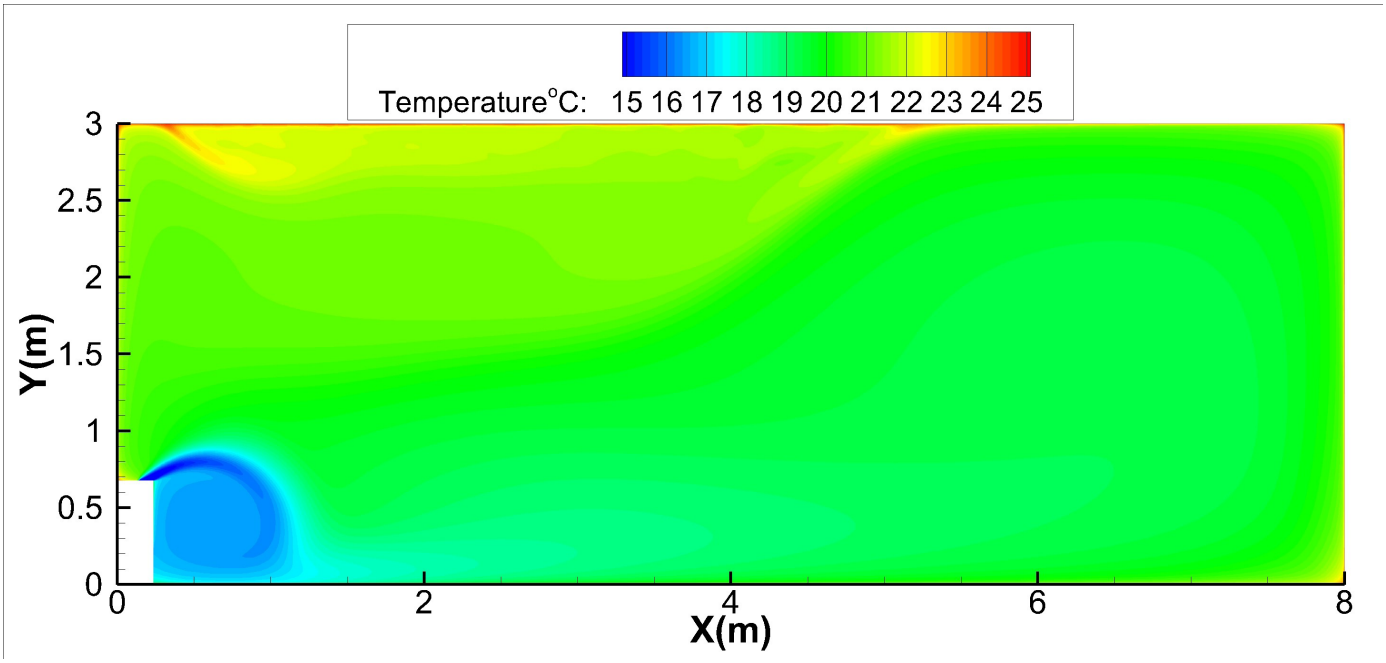

30K-Floor installation:

Discharge Angle 60°

Cooling airflow velocity distributions

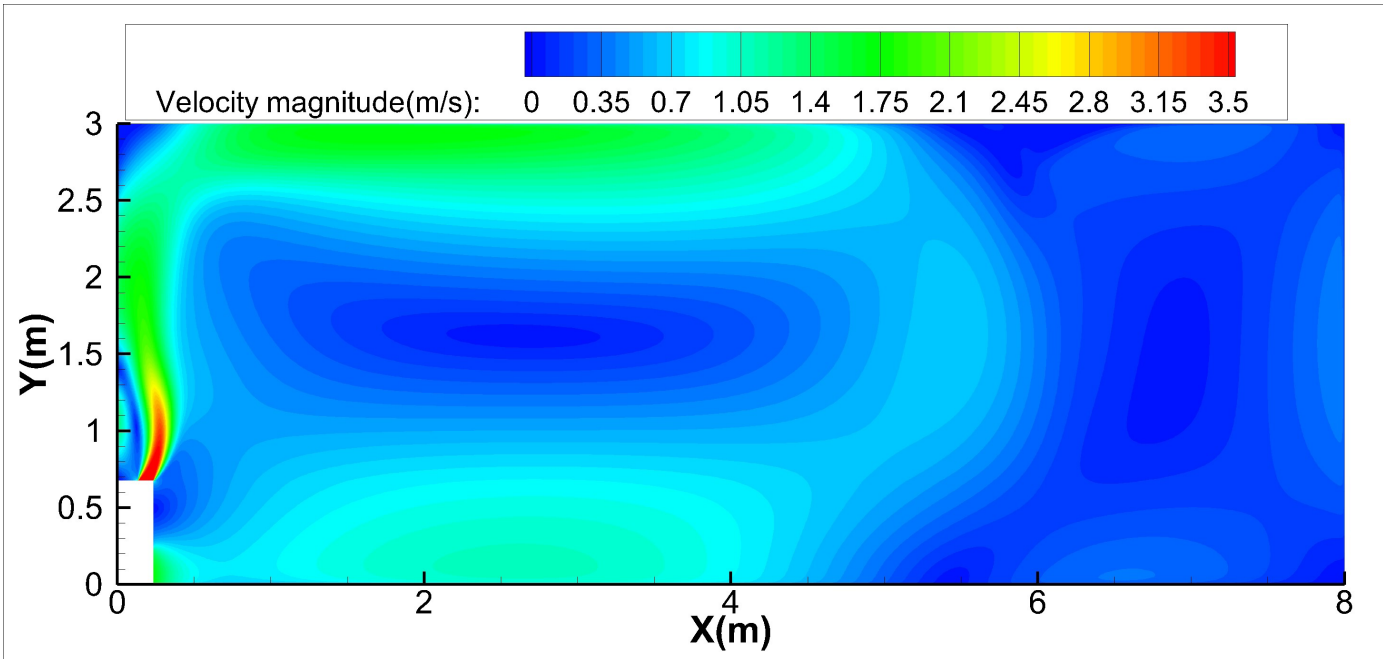

Cooling temperature distributions

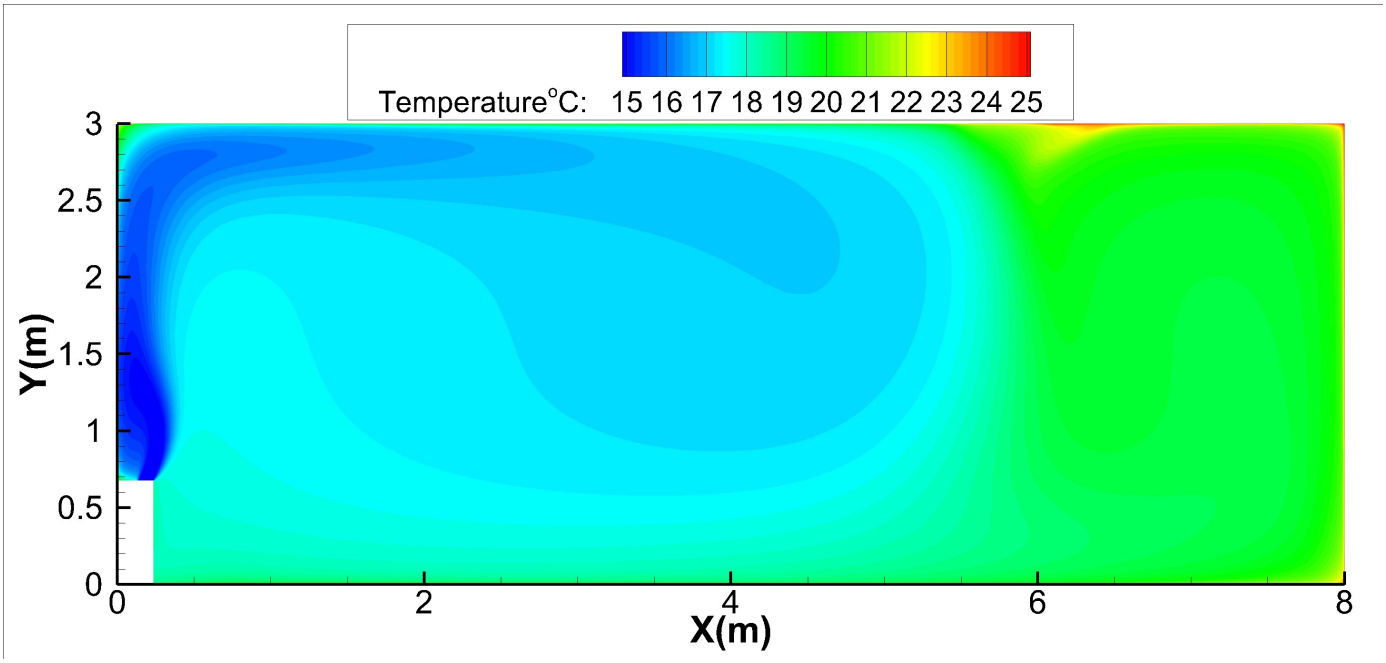

30K-Floor installation:

Discharge Angle 30°

Heating airflow velocity distributions

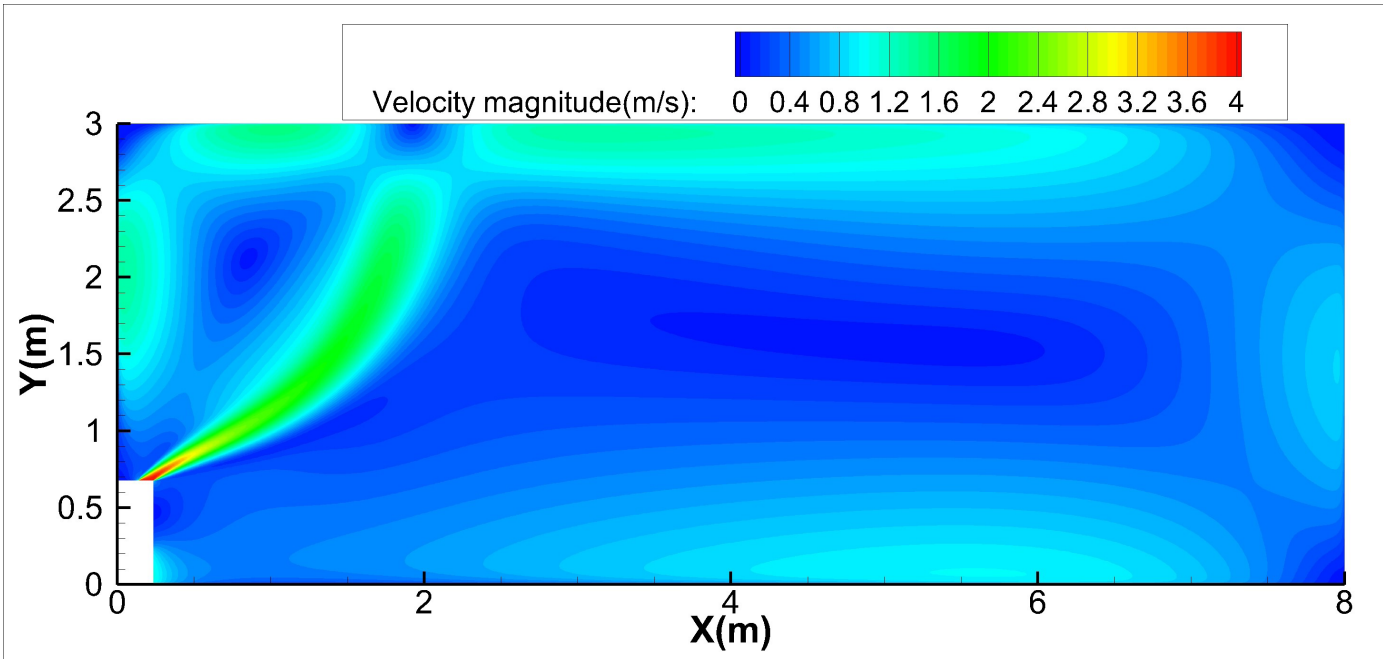

Heating temperature distributions

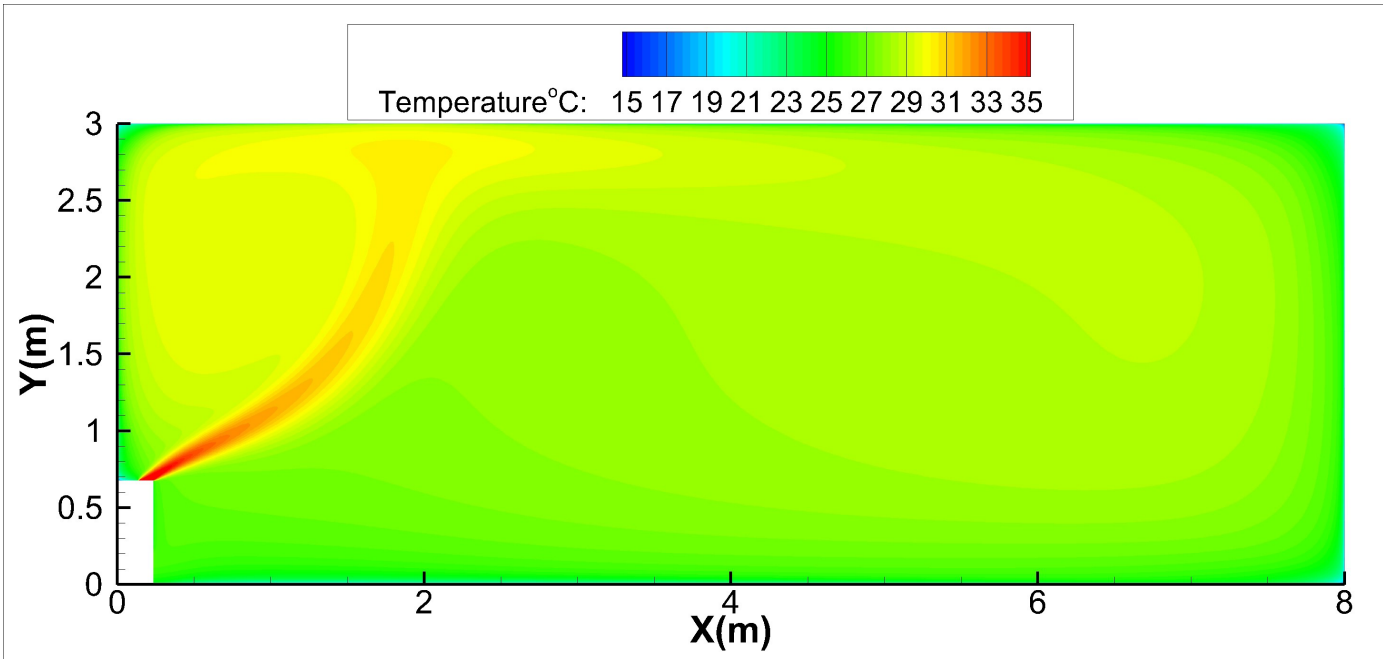

30K-Floor installation:

Discharge Angle 60°

Heating airflow velocity distributions

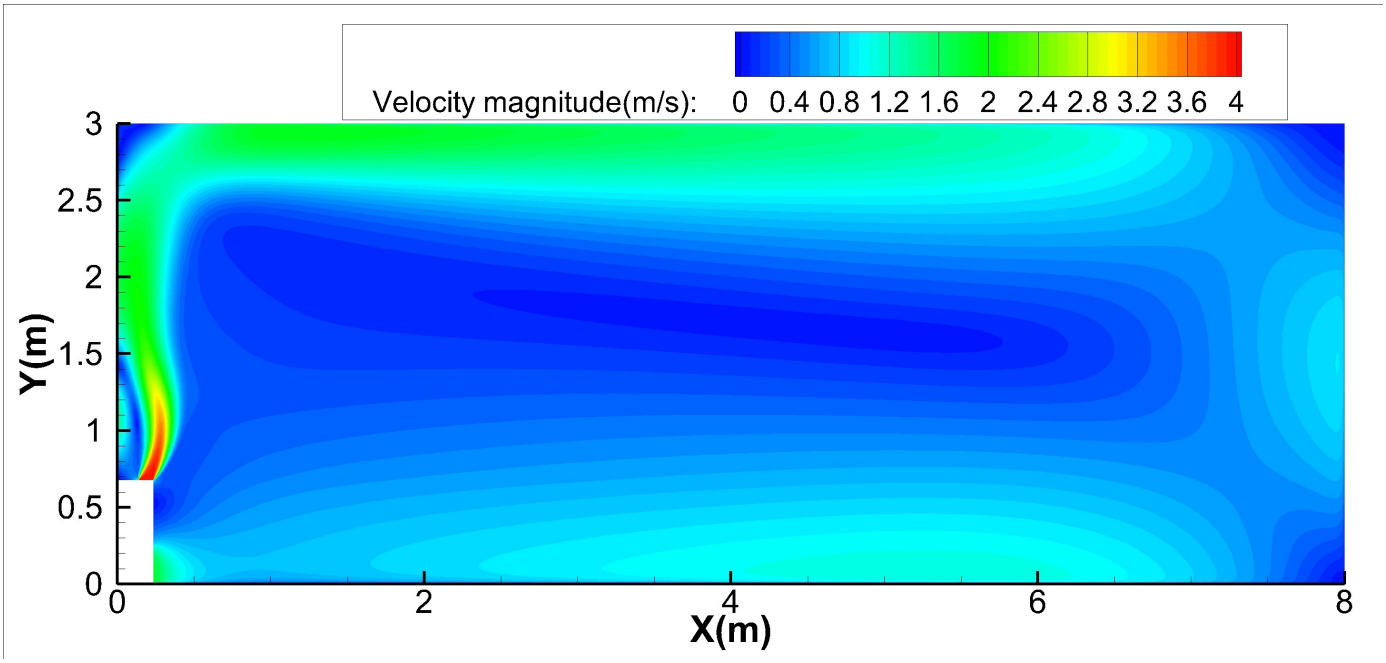

Heating temperature distributions

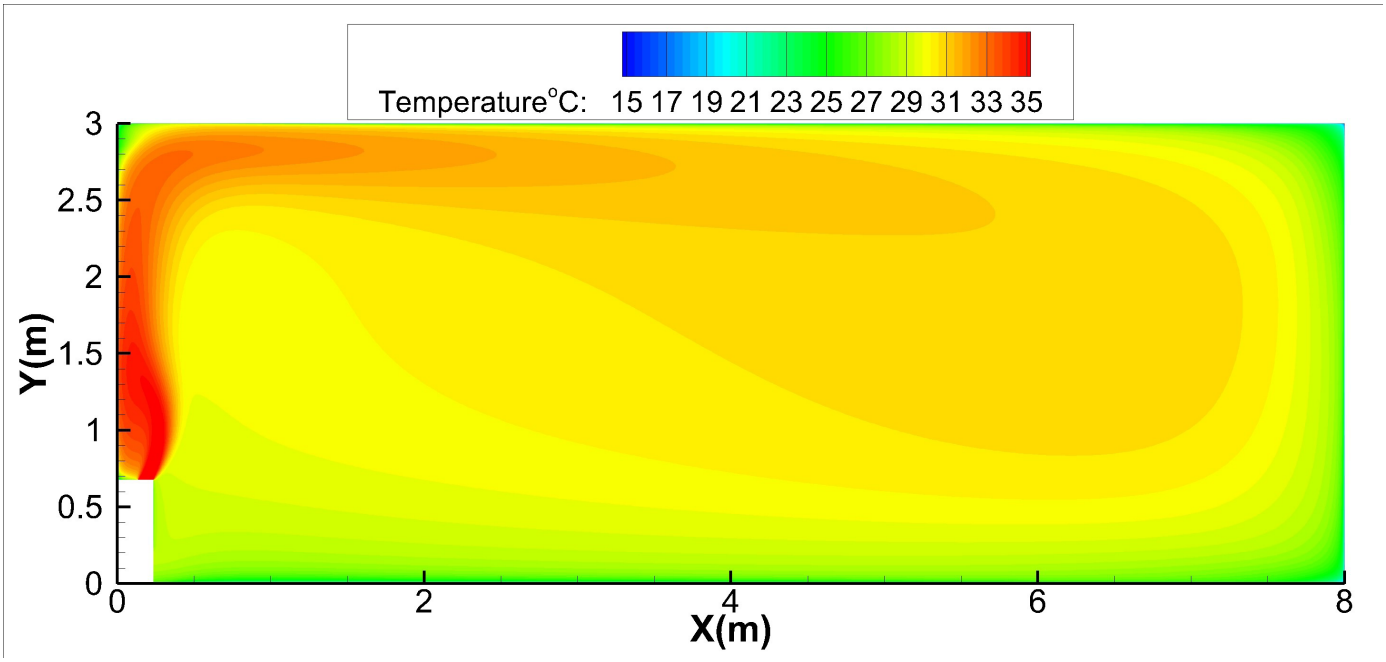

36K-Ceiling installation:

Discharge Angle 30°

Cooling airflow velocity distributions

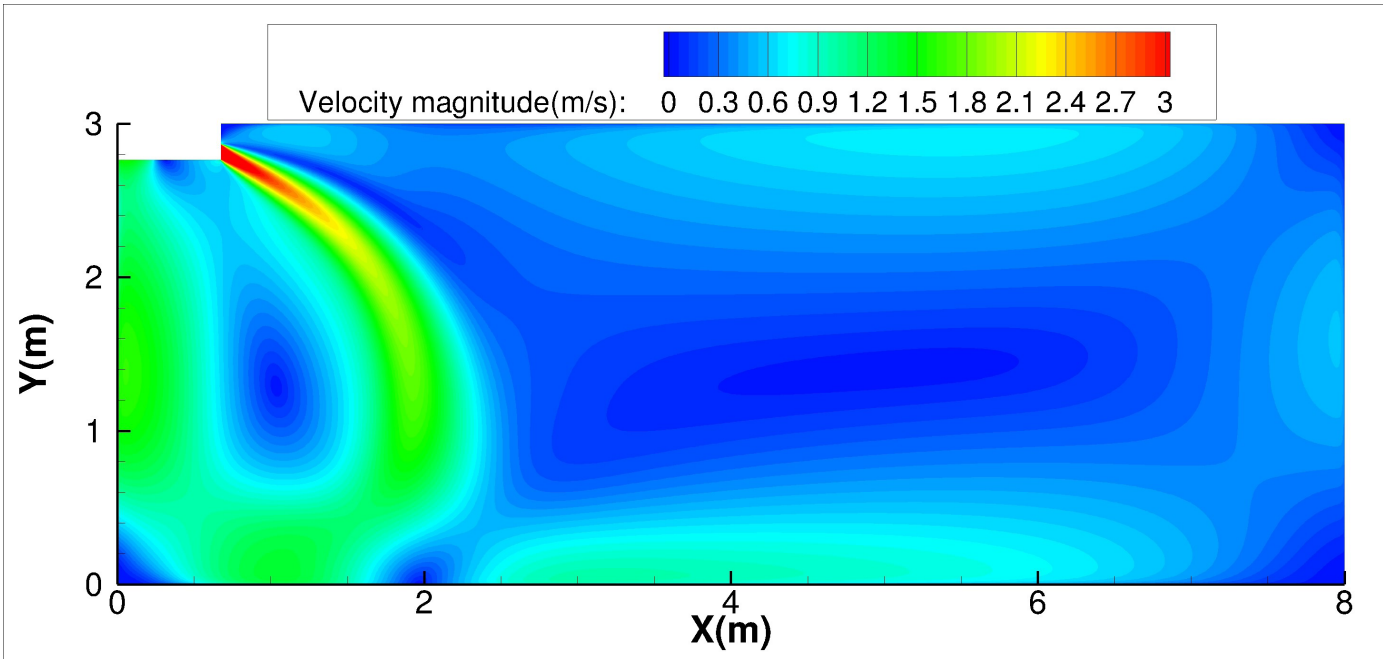

Cooling temperature distributions

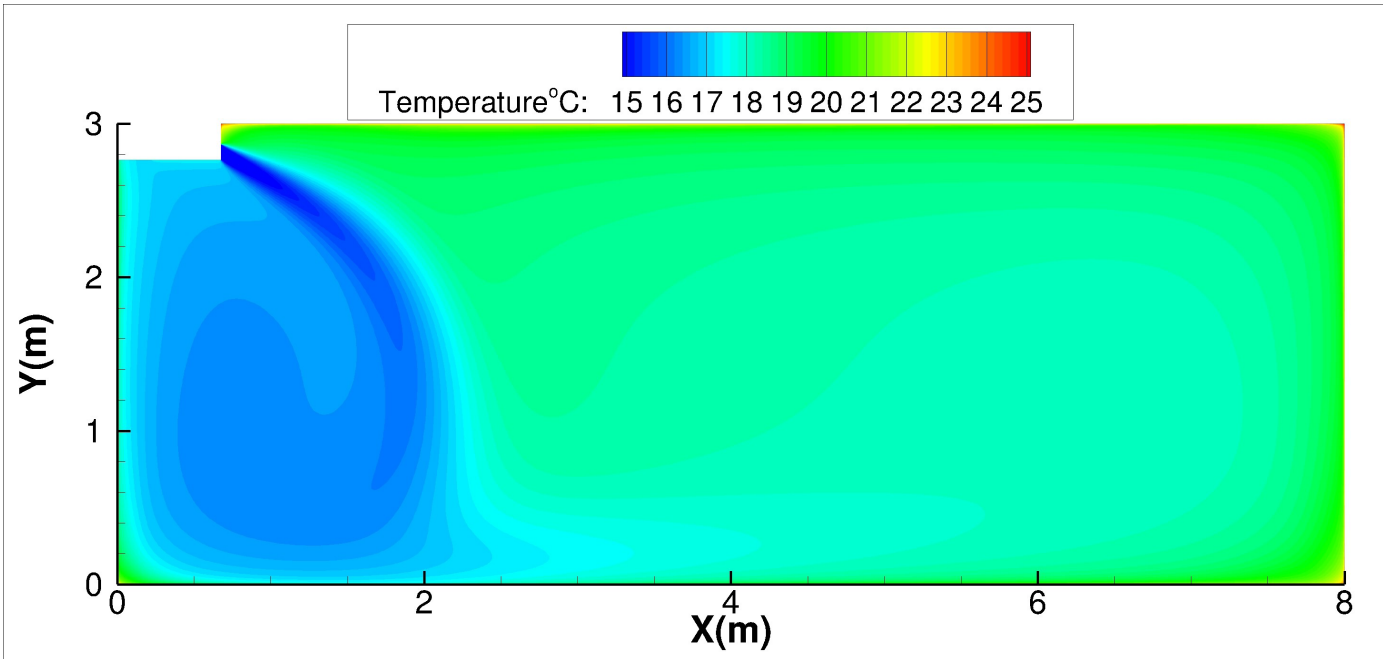

36K-Ceiling installation:

Discharge Angle 60°

Cooling airflow velocity distributions

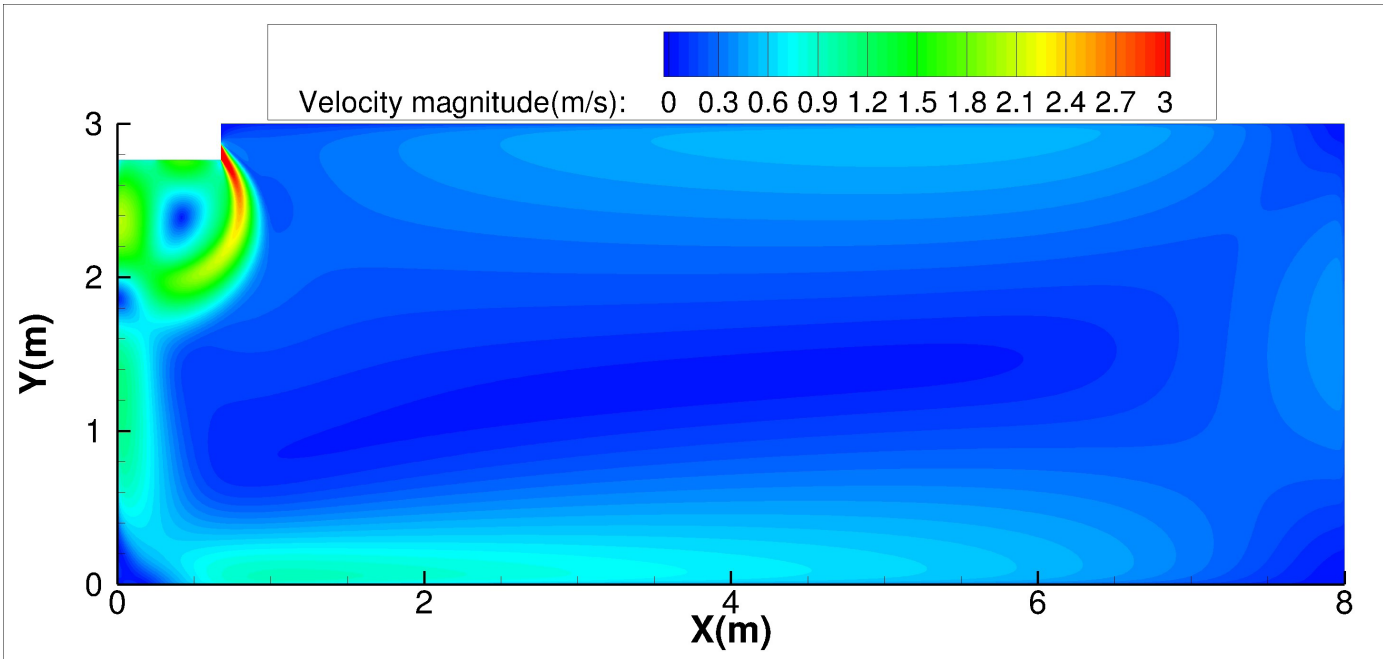

Cooling temperature distributions

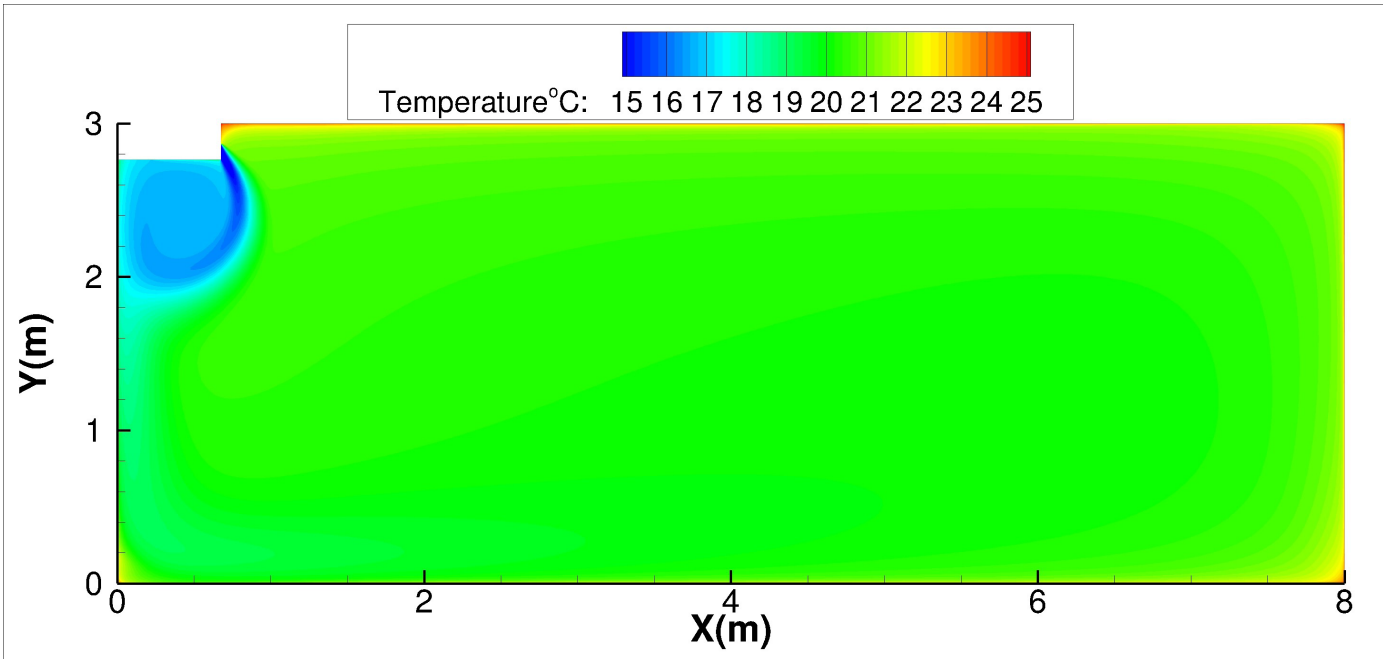

36K-Ceiling installation:

Discharge Angle 30°

Heating airflow velocity distributions

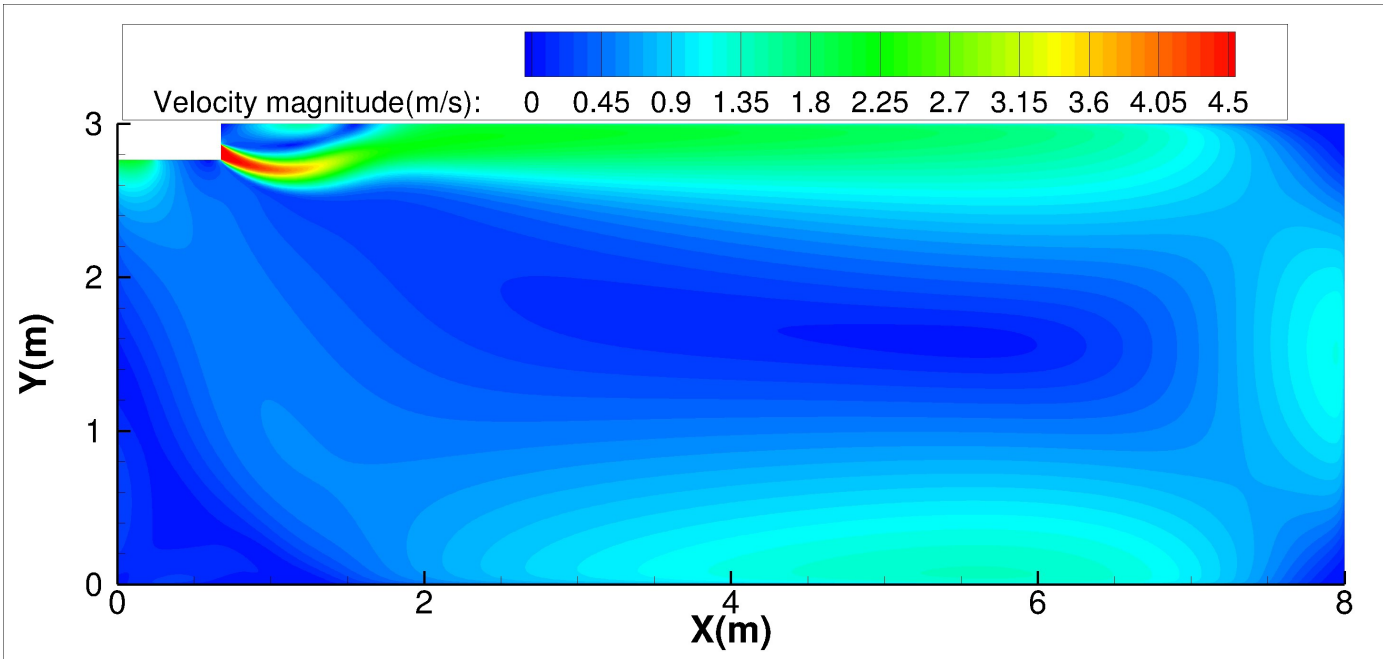

Heating temperature distributions

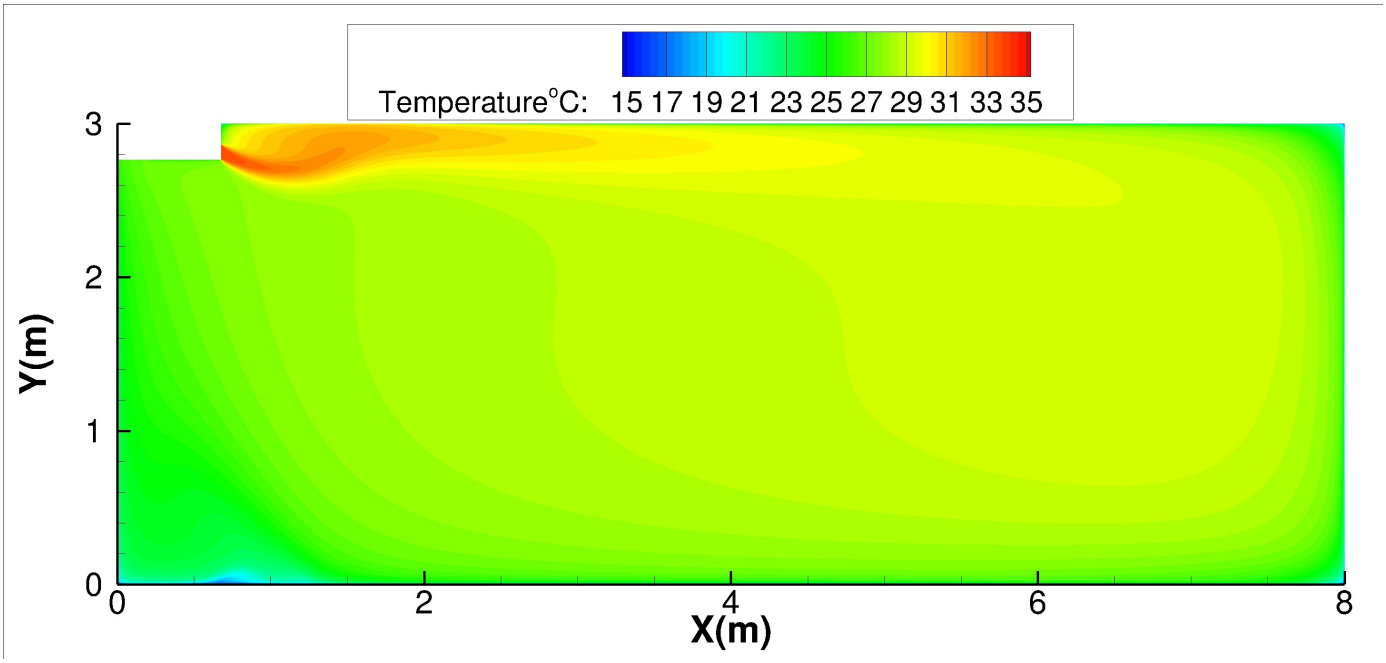

36K-Ceiling installation:

Discharge Angle 60°

Heating airflow velocity distributions

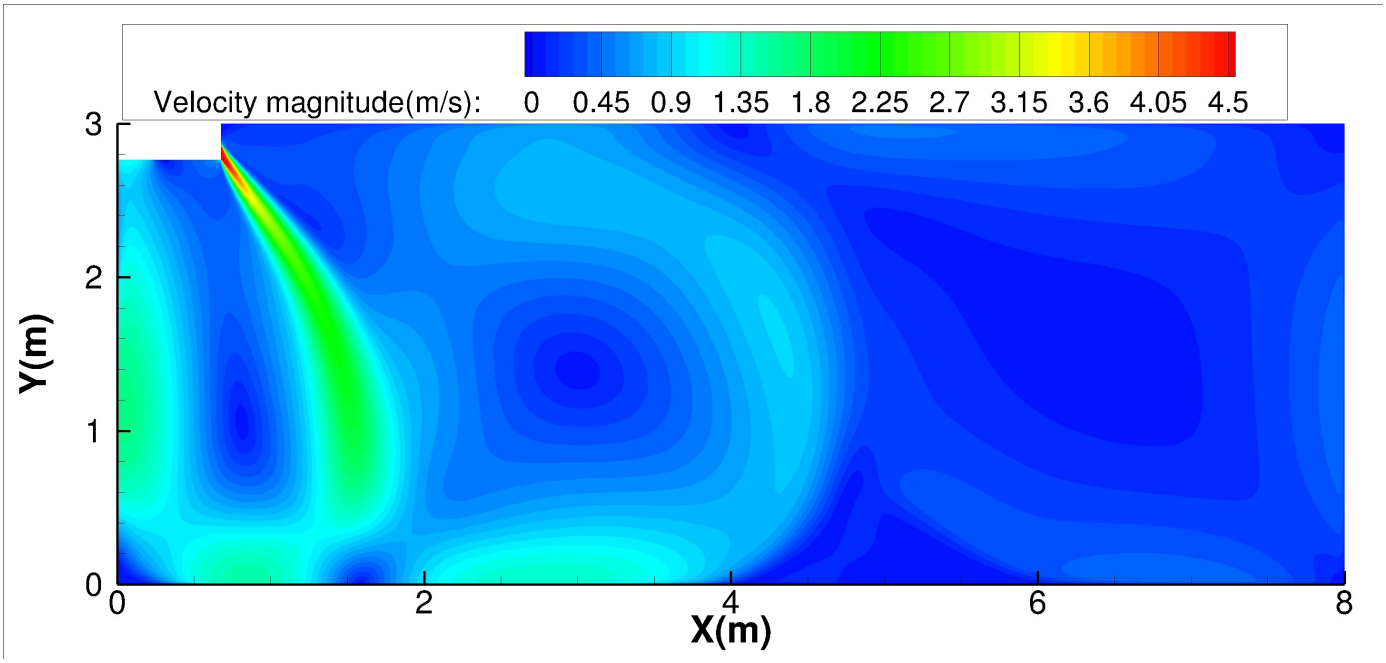

Heating temperature distributions

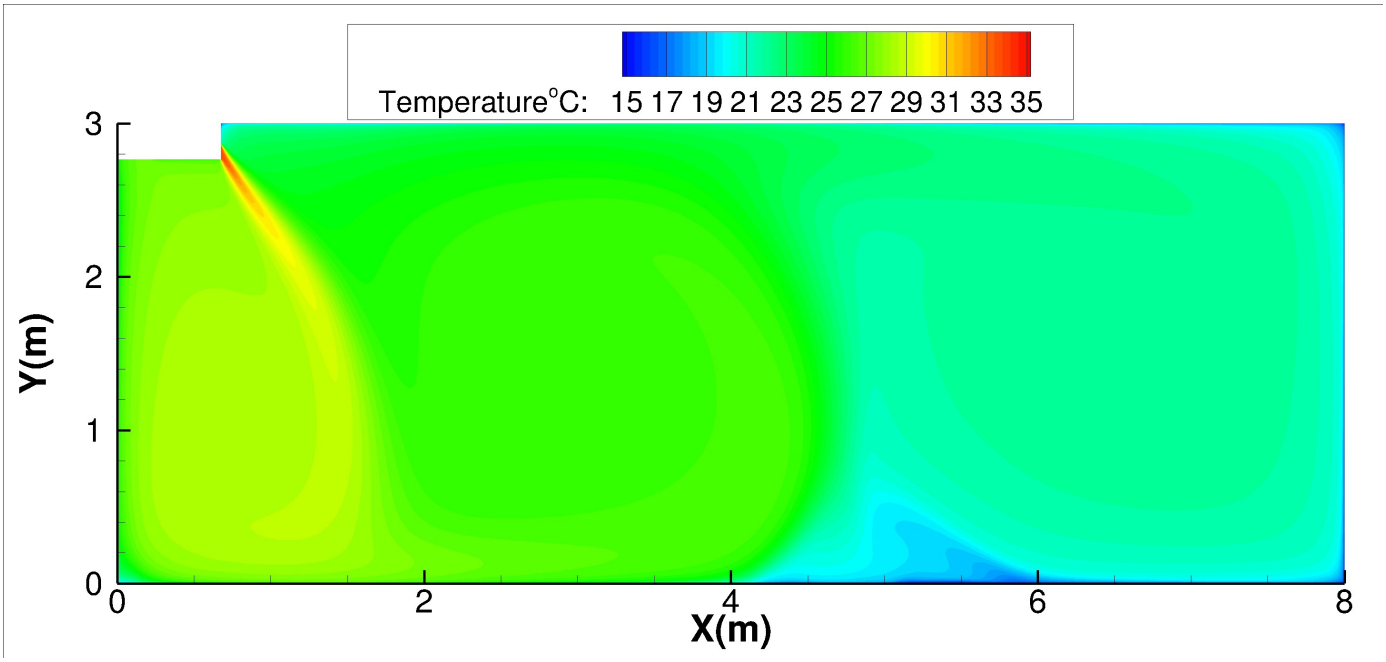

36K-Floor installation:

Discharge Angle 30°

Cooling airflow velocity distributions

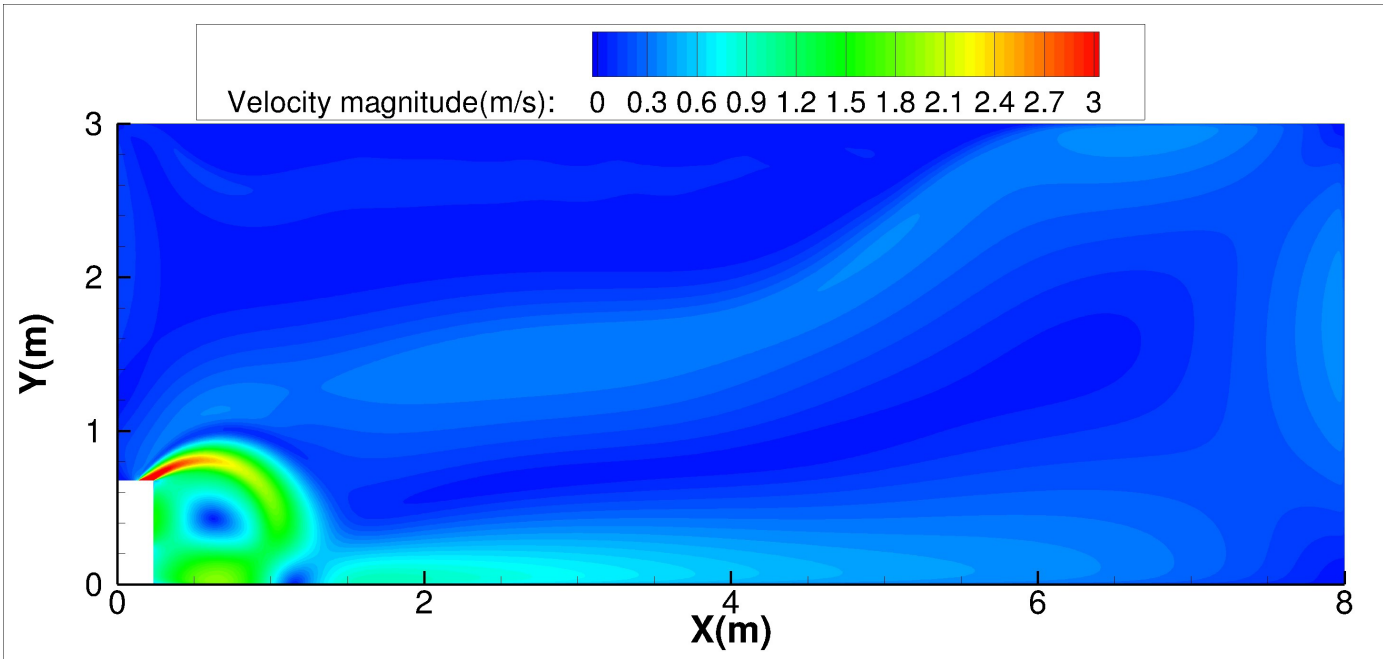

Cooling temperature distributions

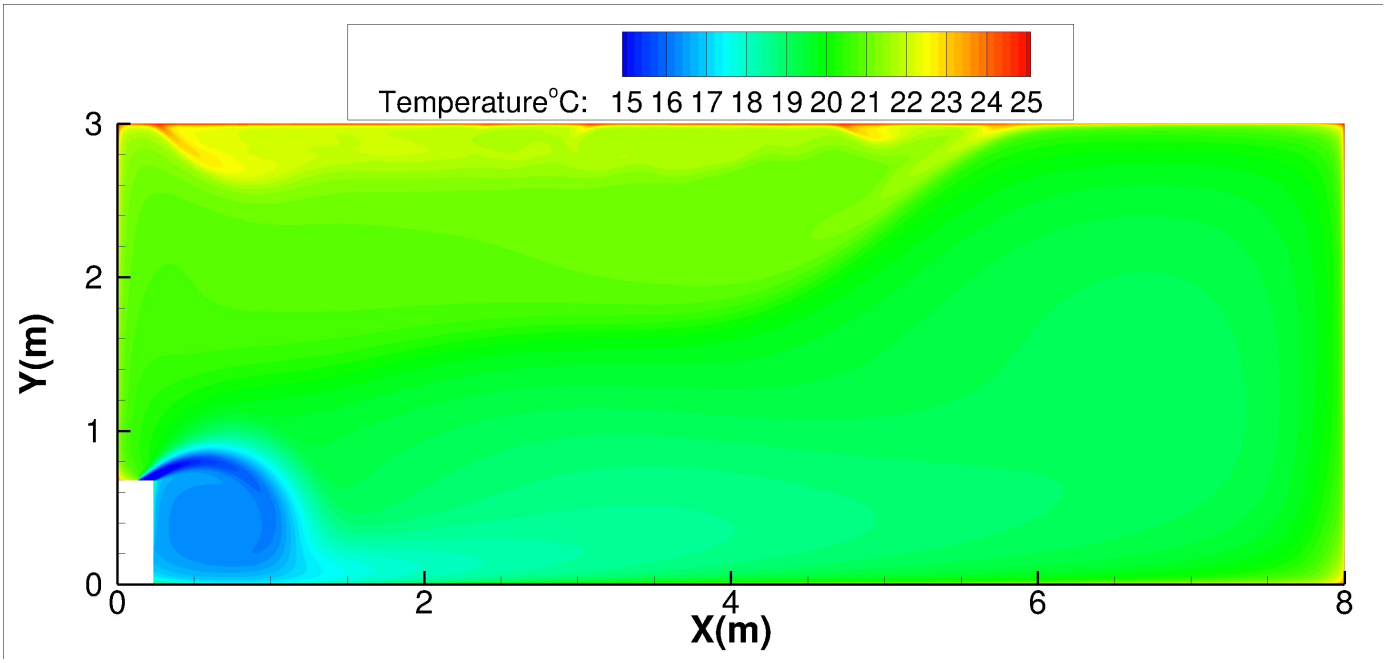

36K-Floor installation:

Discharge Angle 60°

Cooling airflow velocity distributions

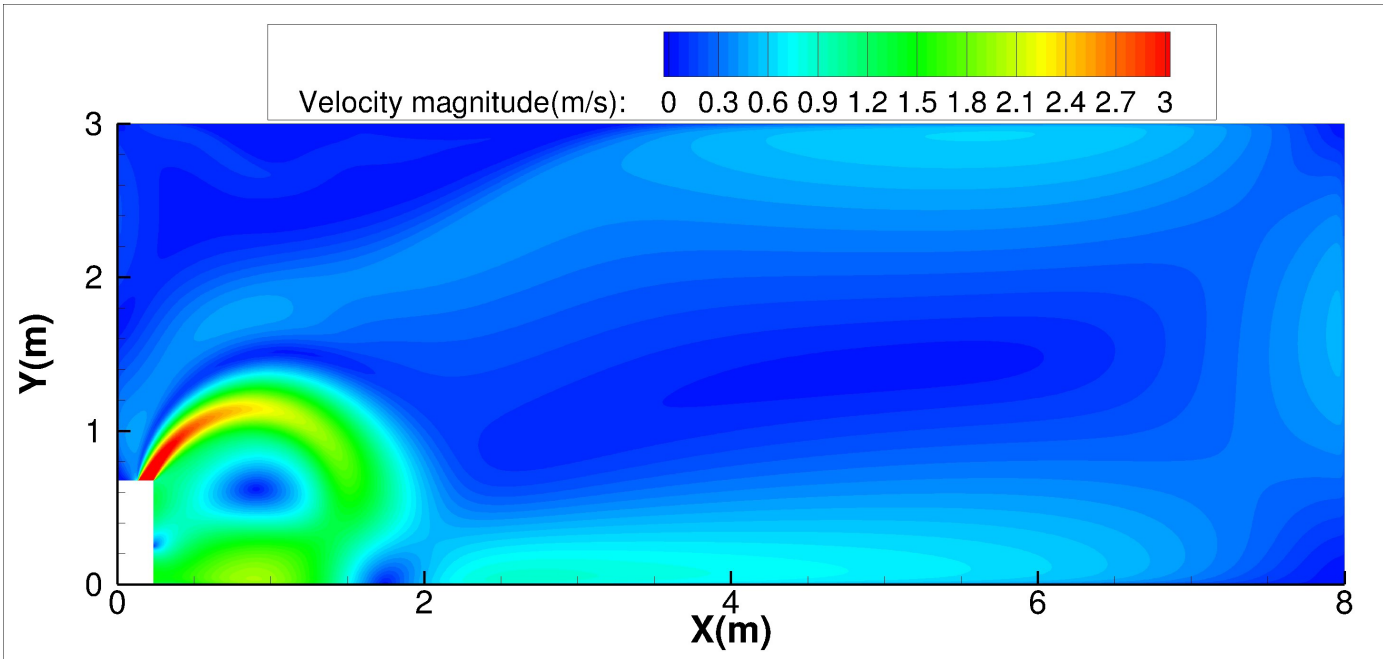

Cooling temperature distributions

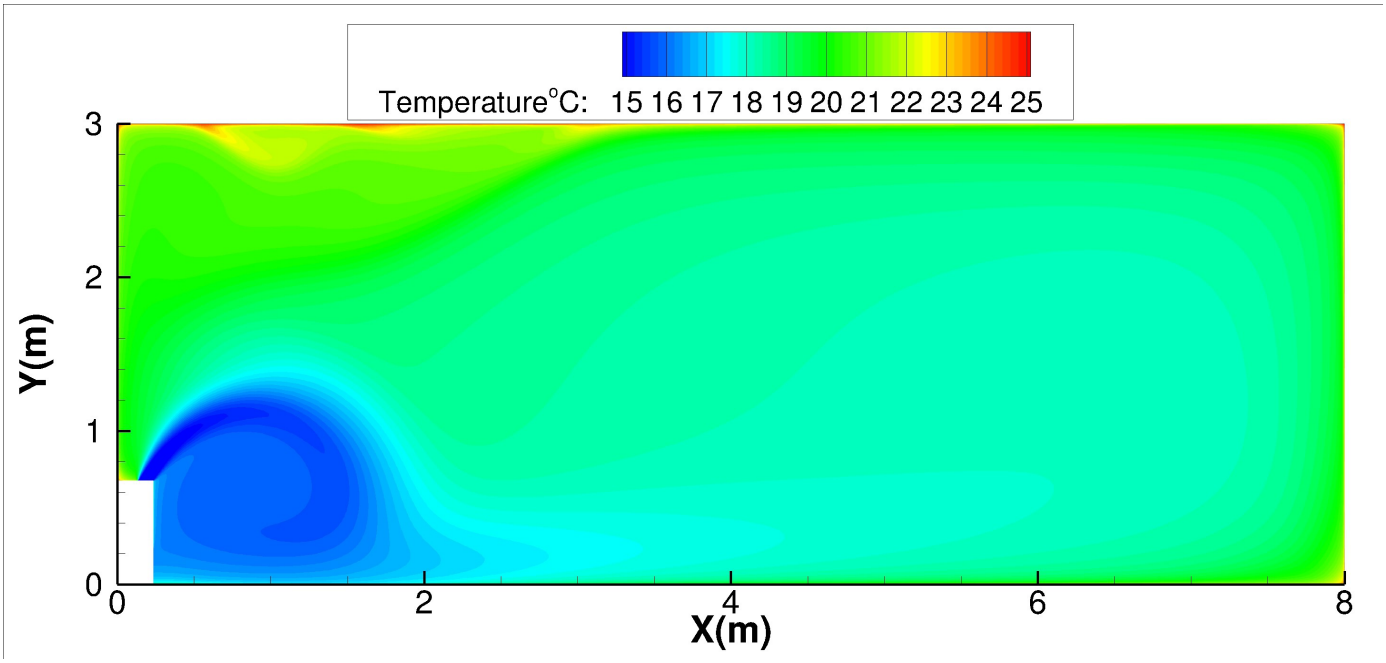

36K-Floor installation:

Discharge Angle 30°

Heating airflow velocity distributions

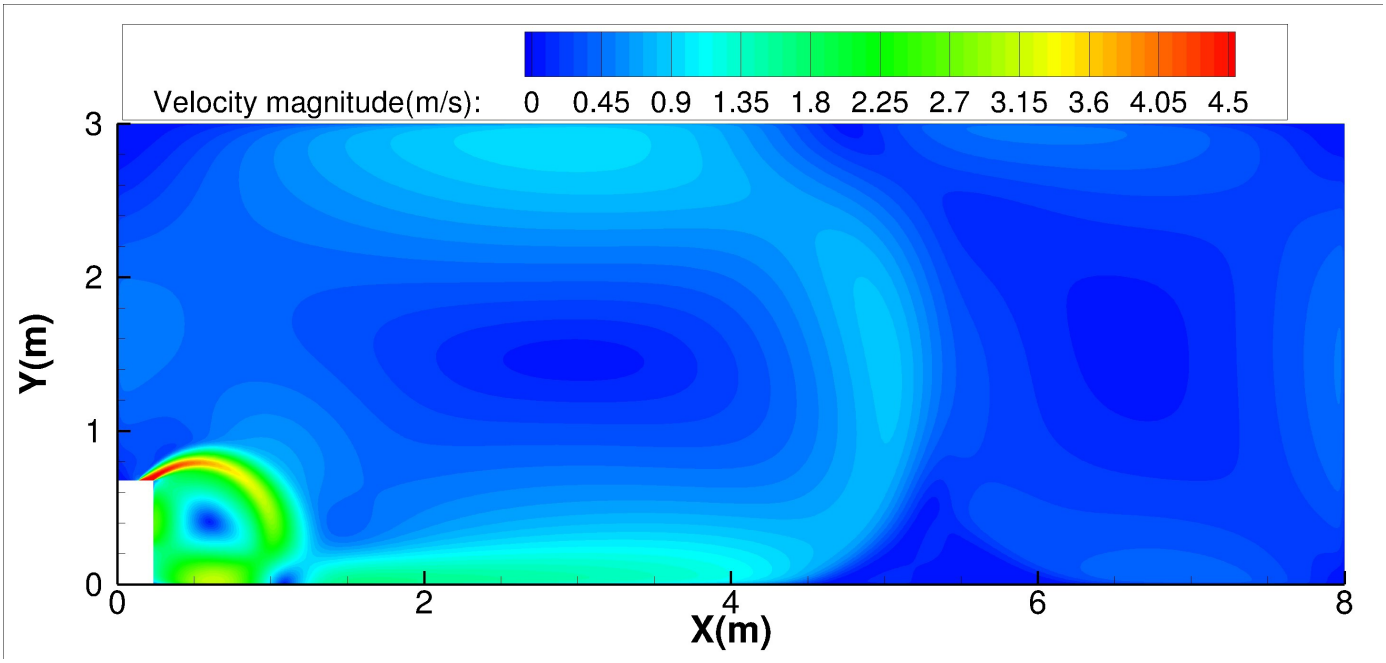

Heating temperature distributions

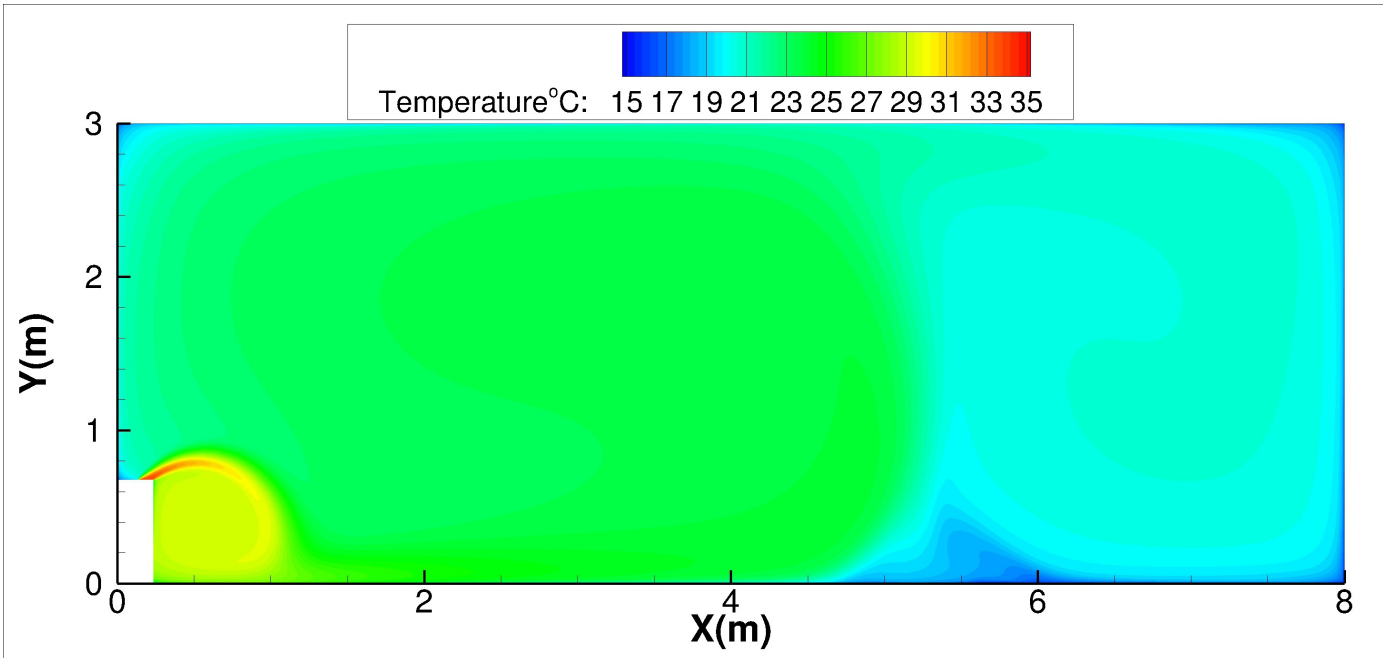

36K-Floor installation:

Discharge Angle 60°

Heating airflow velocity distributions

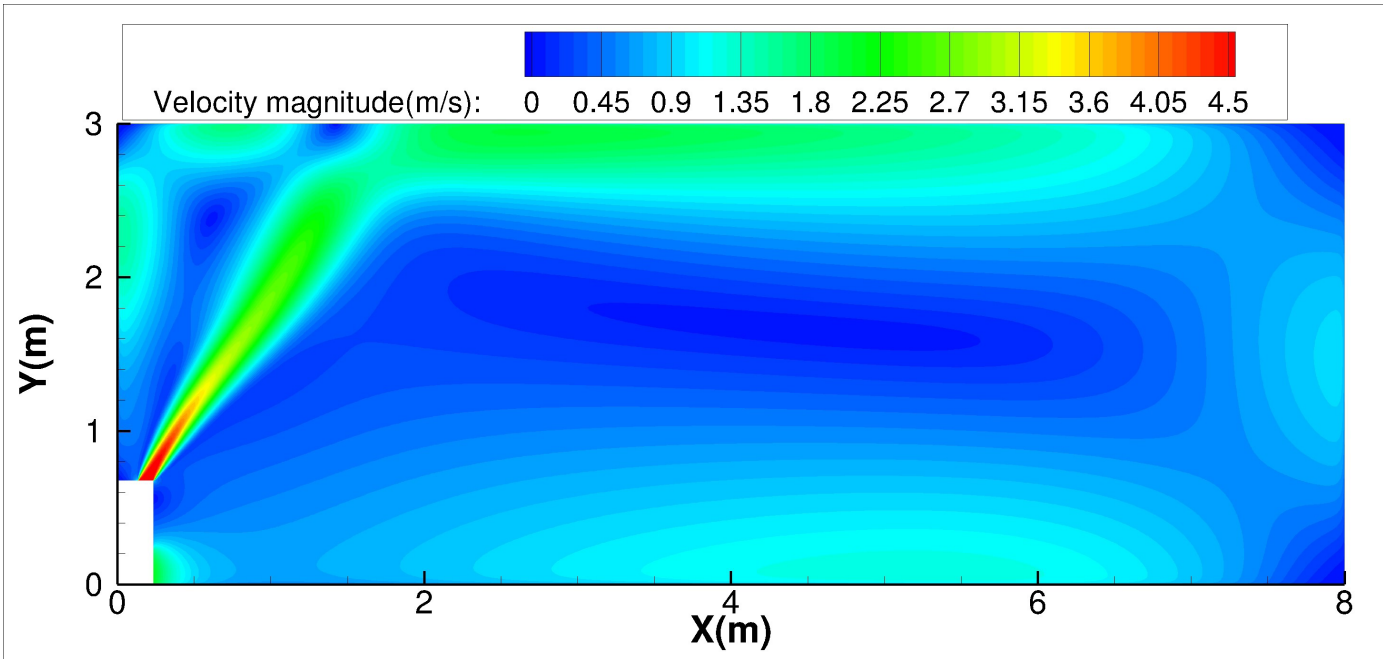

Heating temperature distributions

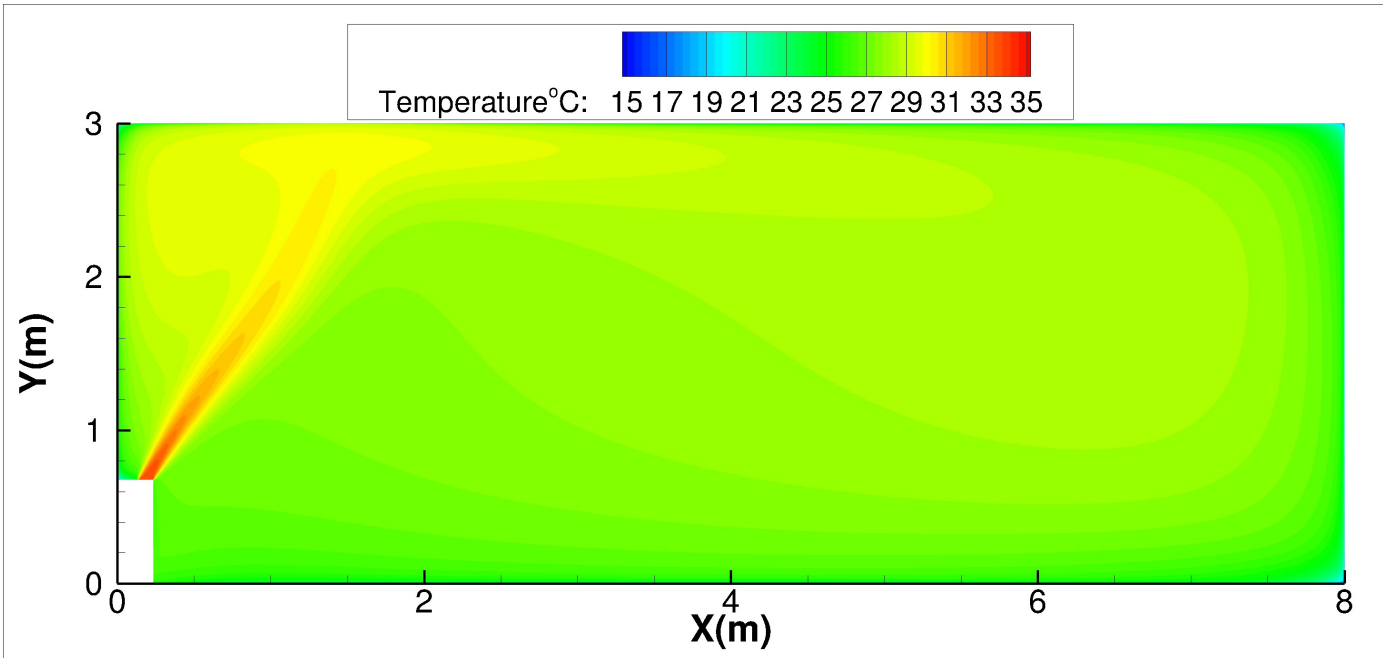

42K-Ceiling installation:

Discharge Angle 30°

Cooling airflow velocity distributions

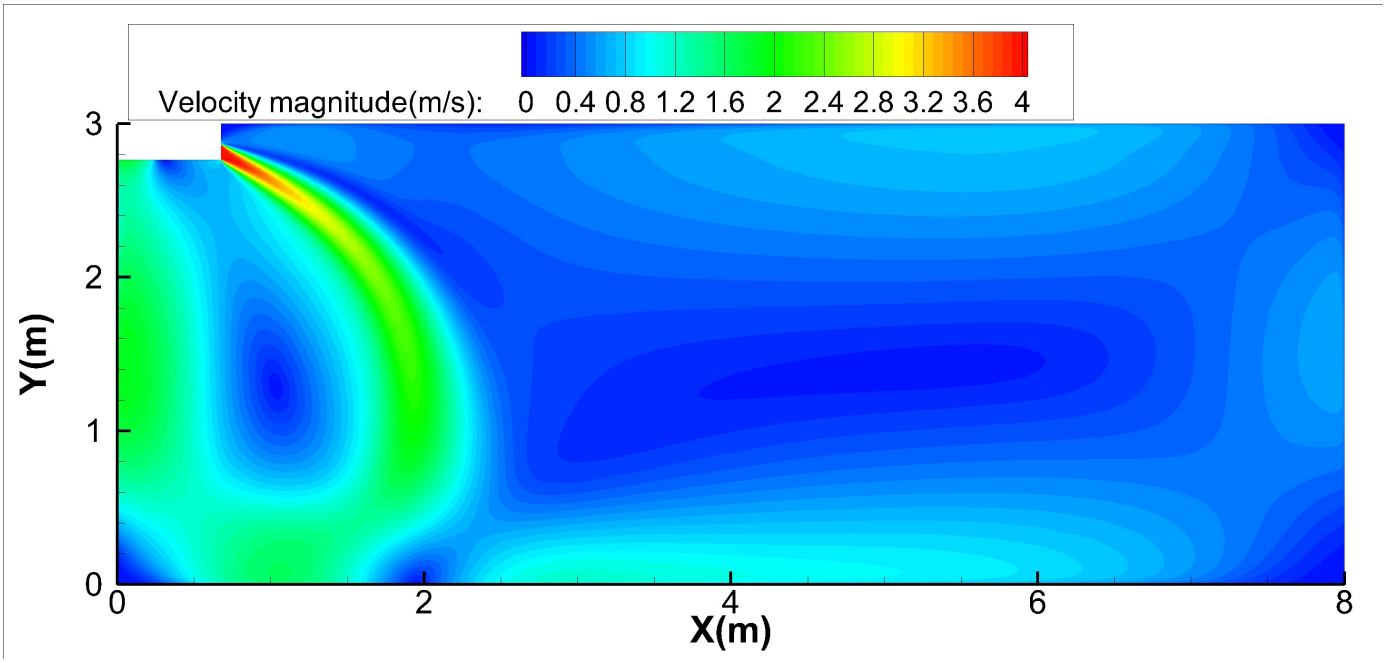

Cooling temperature distributions

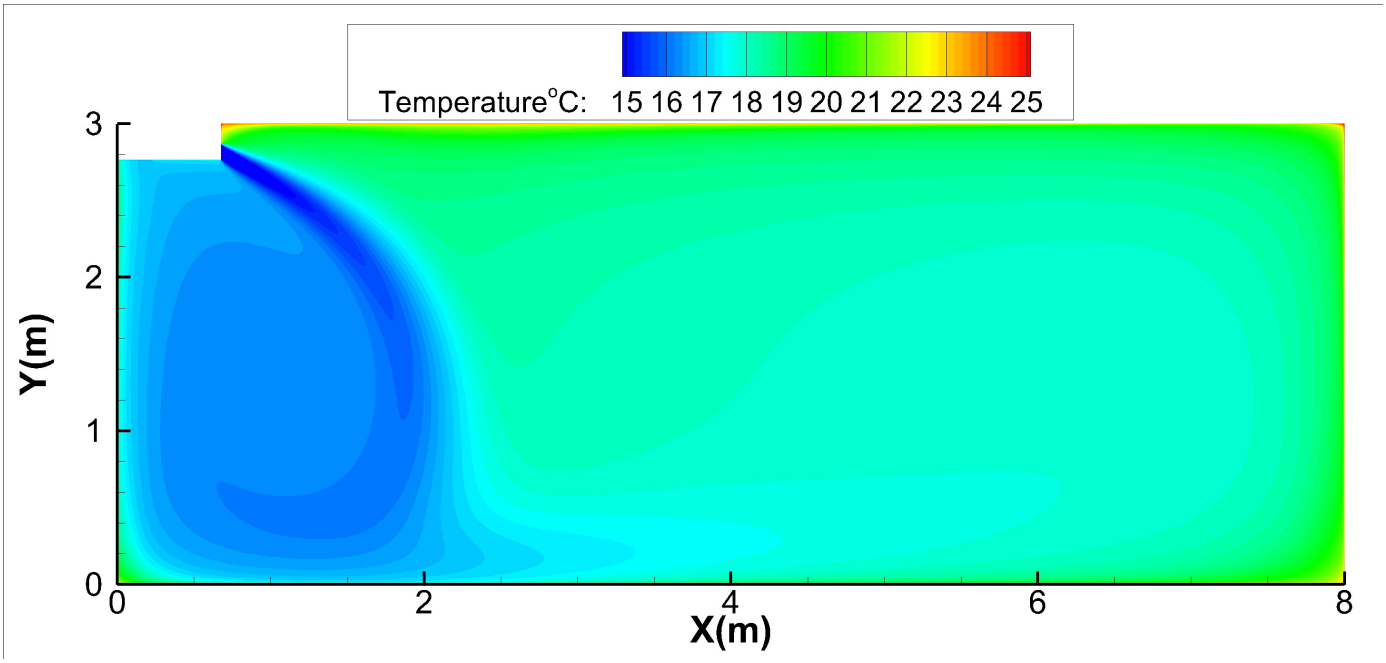

42K-Ceiling installation:

Discharge Angle 60°

Cooling airflow velocity distributions

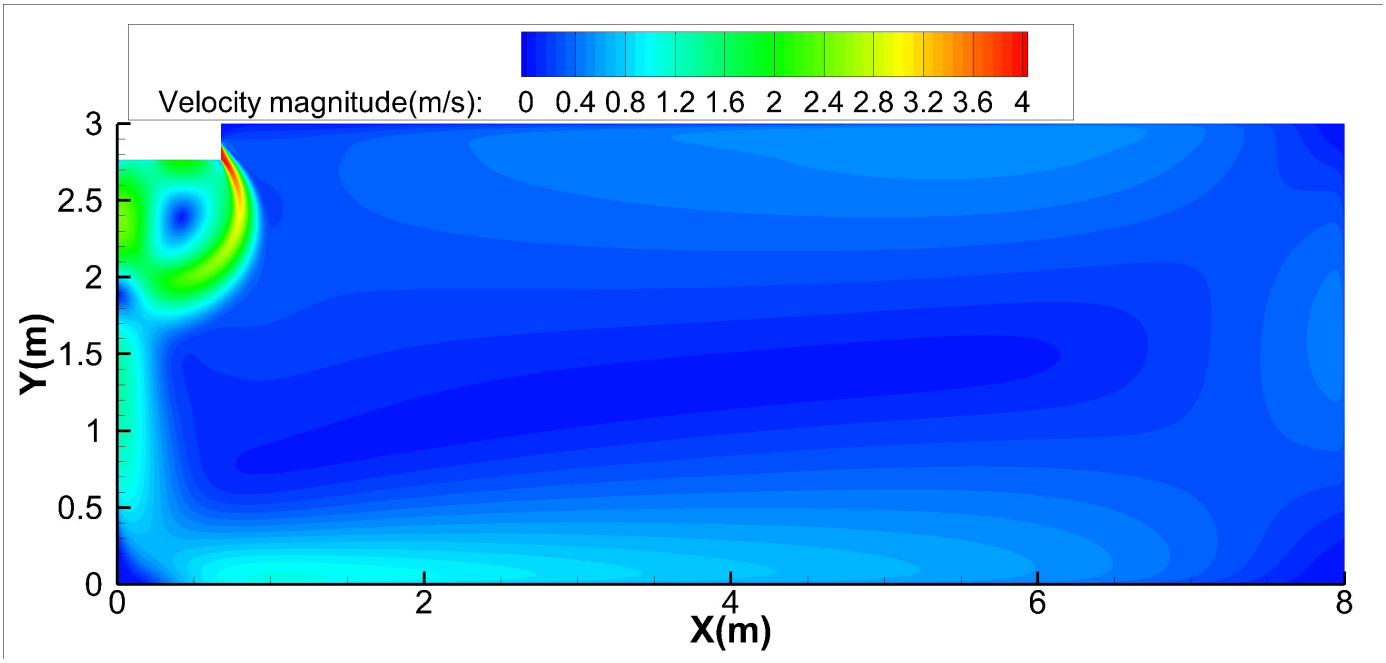

Cooling temperature distributions

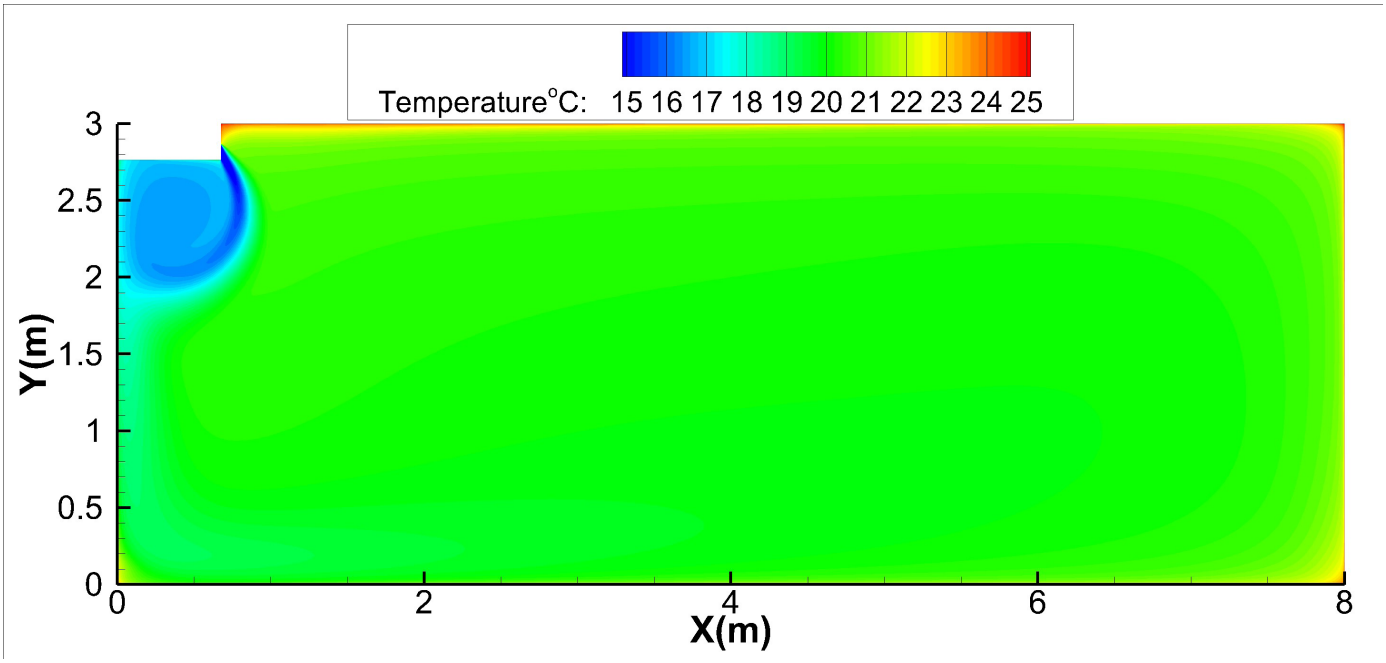

42K-Ceiling installation:

Discharge Angle 30°

Heating airflow velocity distributions

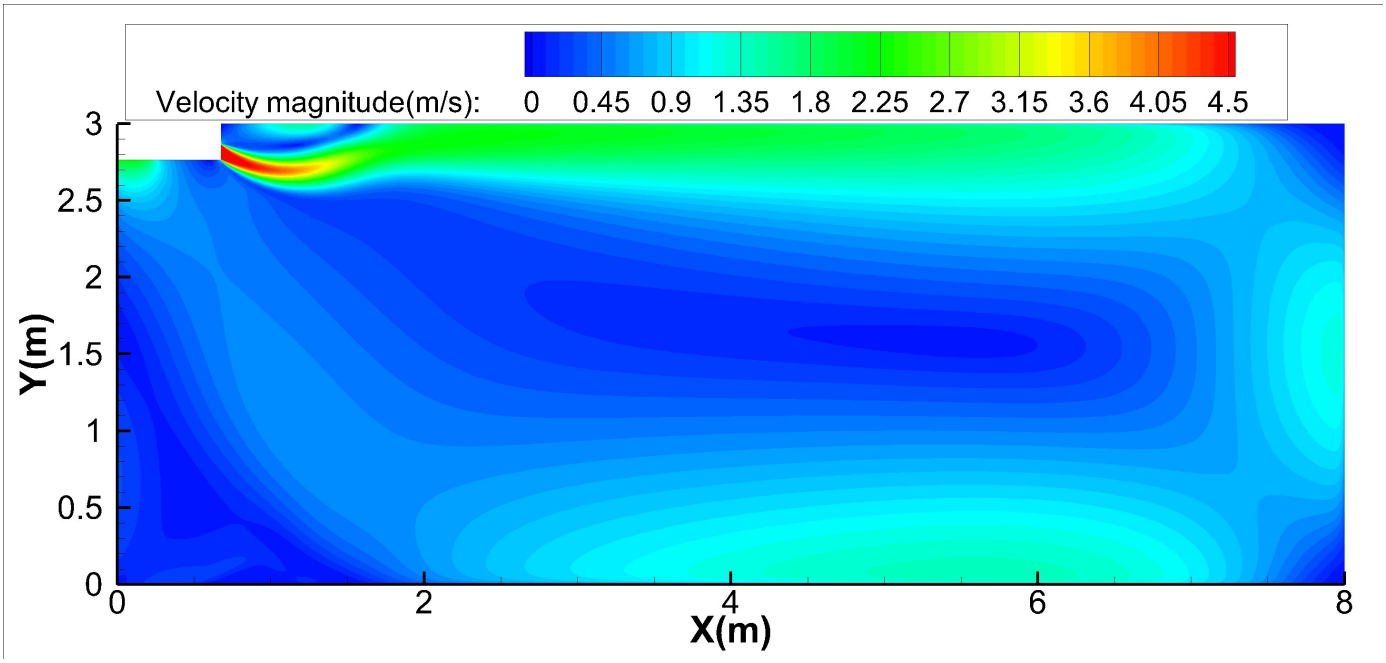

Heating temperature distributions

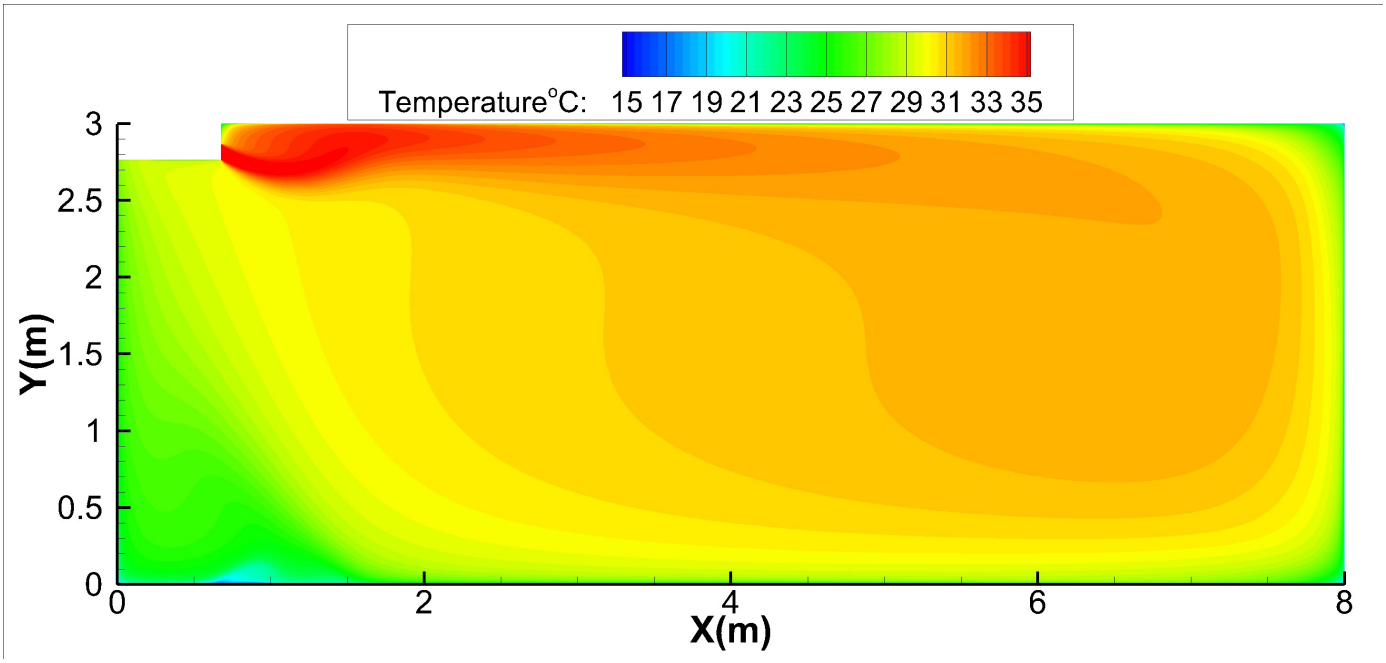

42K-Ceiling installation:

Discharge Angle 60°

Heating airflow velocity distributions

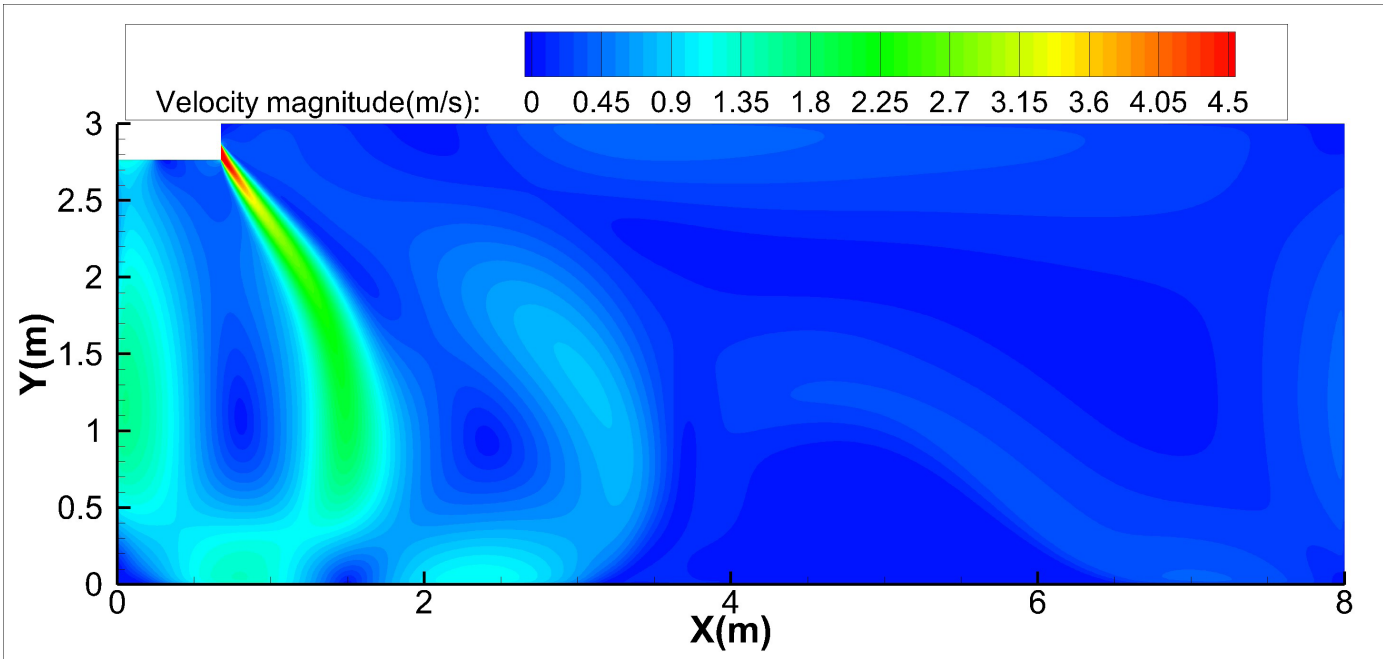

Heating temperature distributions

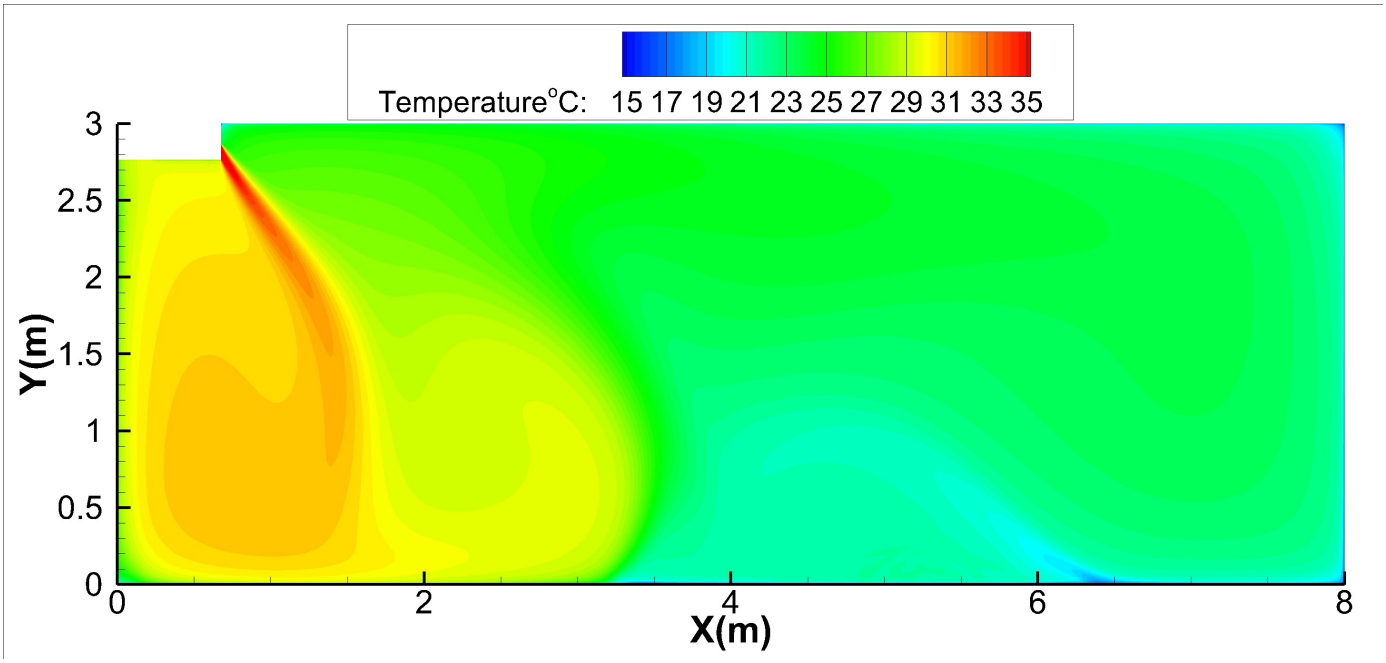

42K-Floor installation:

Discharge Angle 30°

Cooling airflow velocity distributions

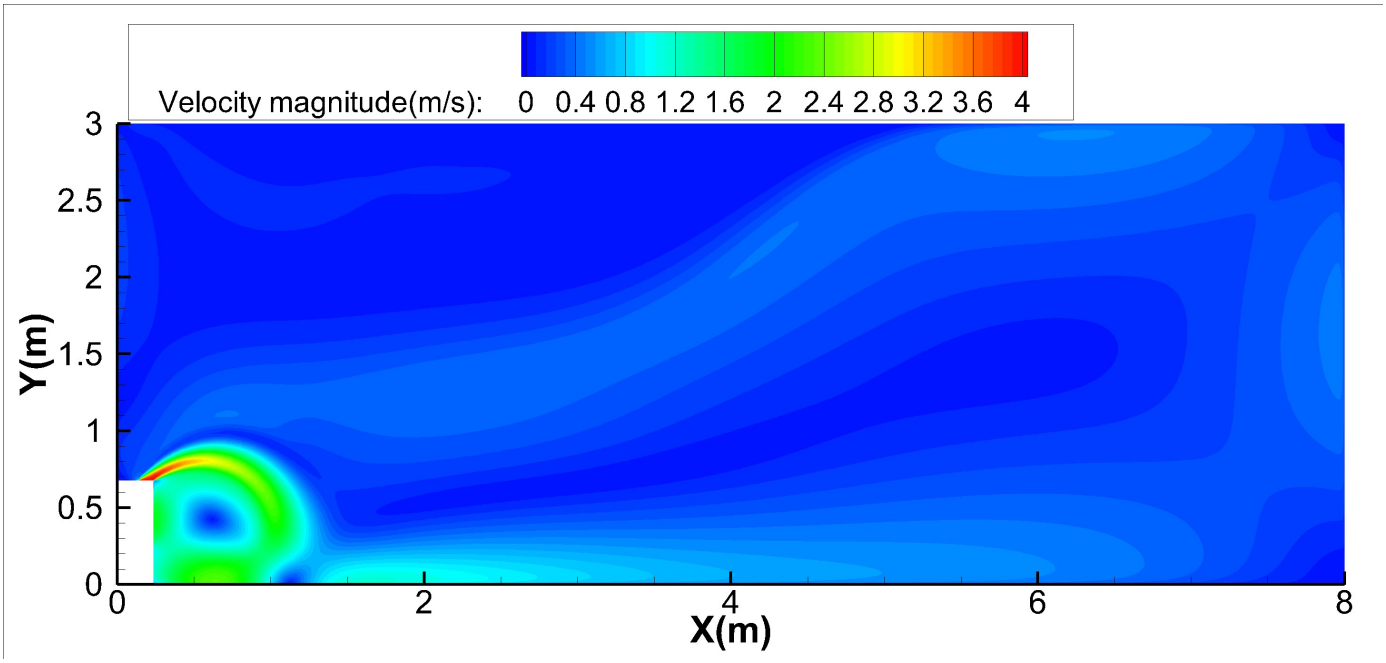

Cooling temperature distributions

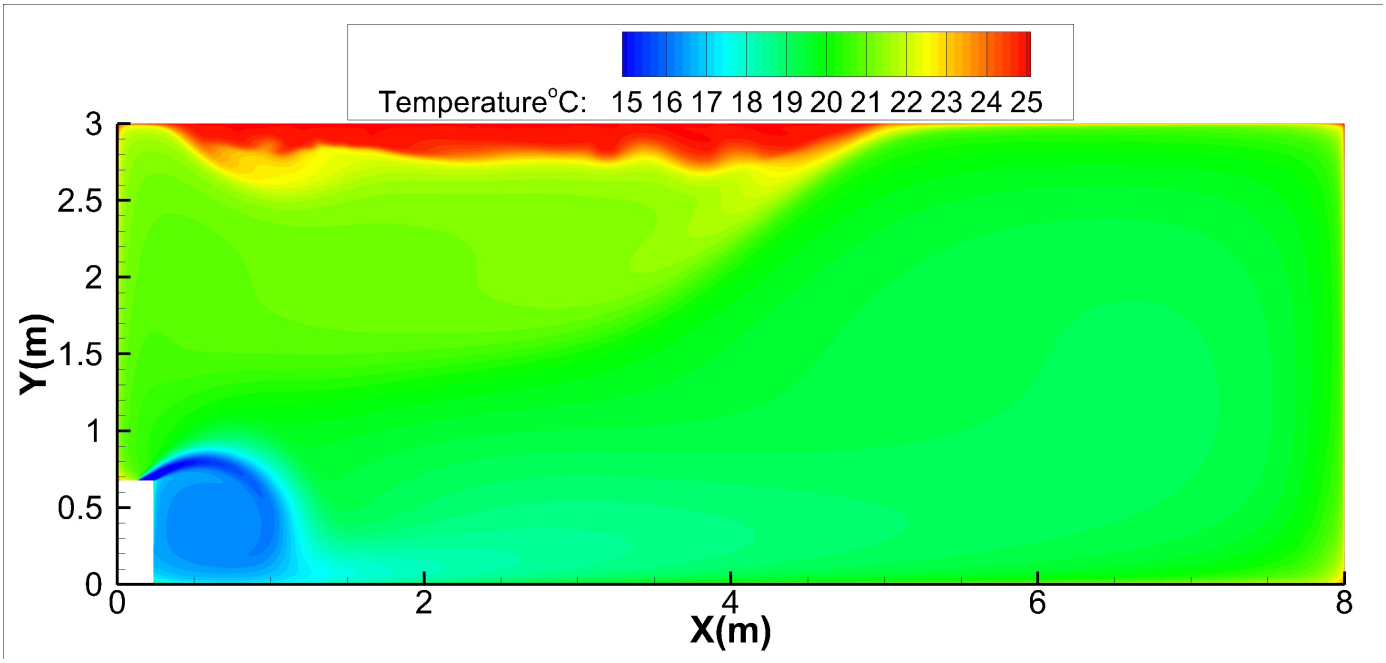

42K-Floor installation:

Discharge Angle 60°

Cooling airflow velocity distributions

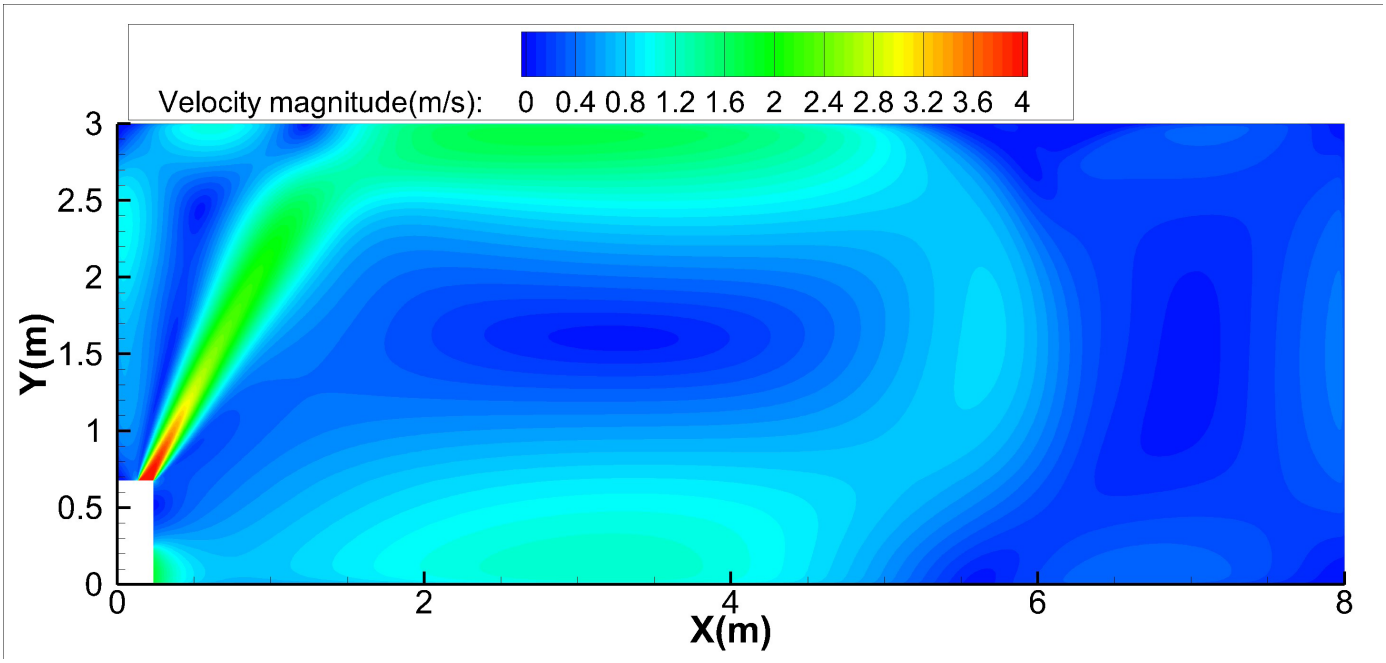

Cooling temperature distributions

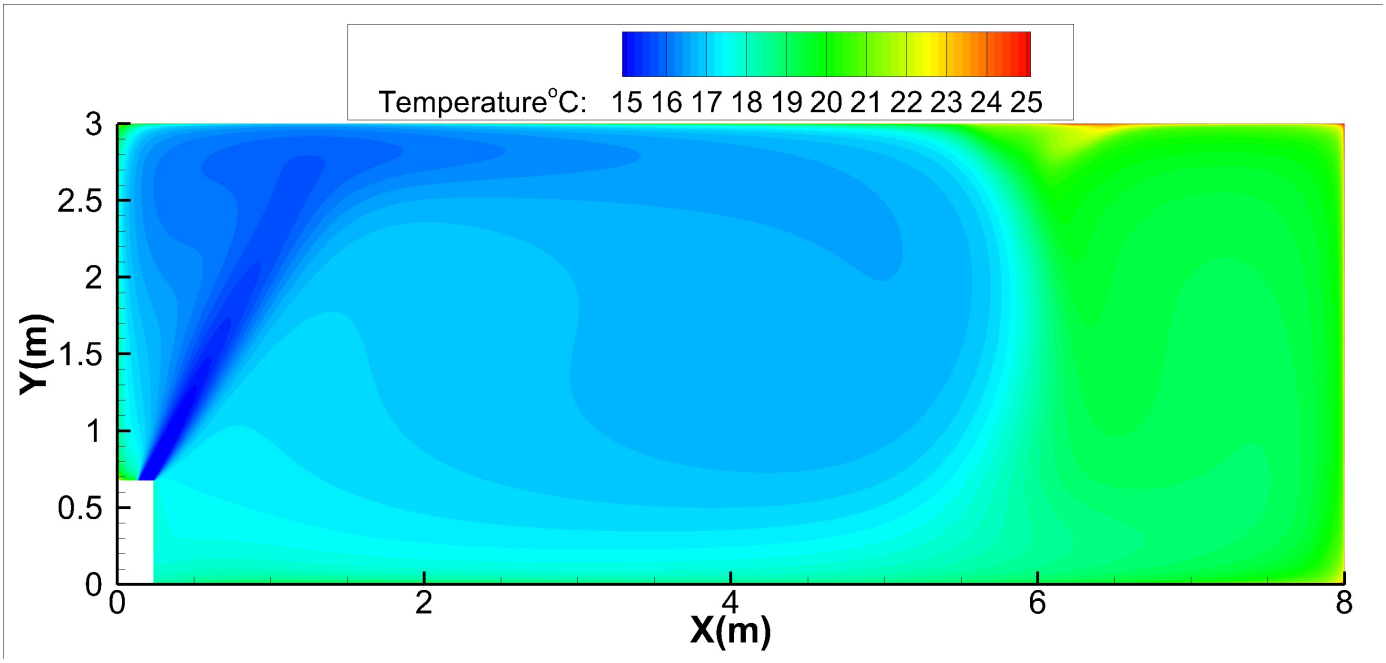

42K-Floor installation:

Discharge Angle 30°

Heating airflow velocity distributions

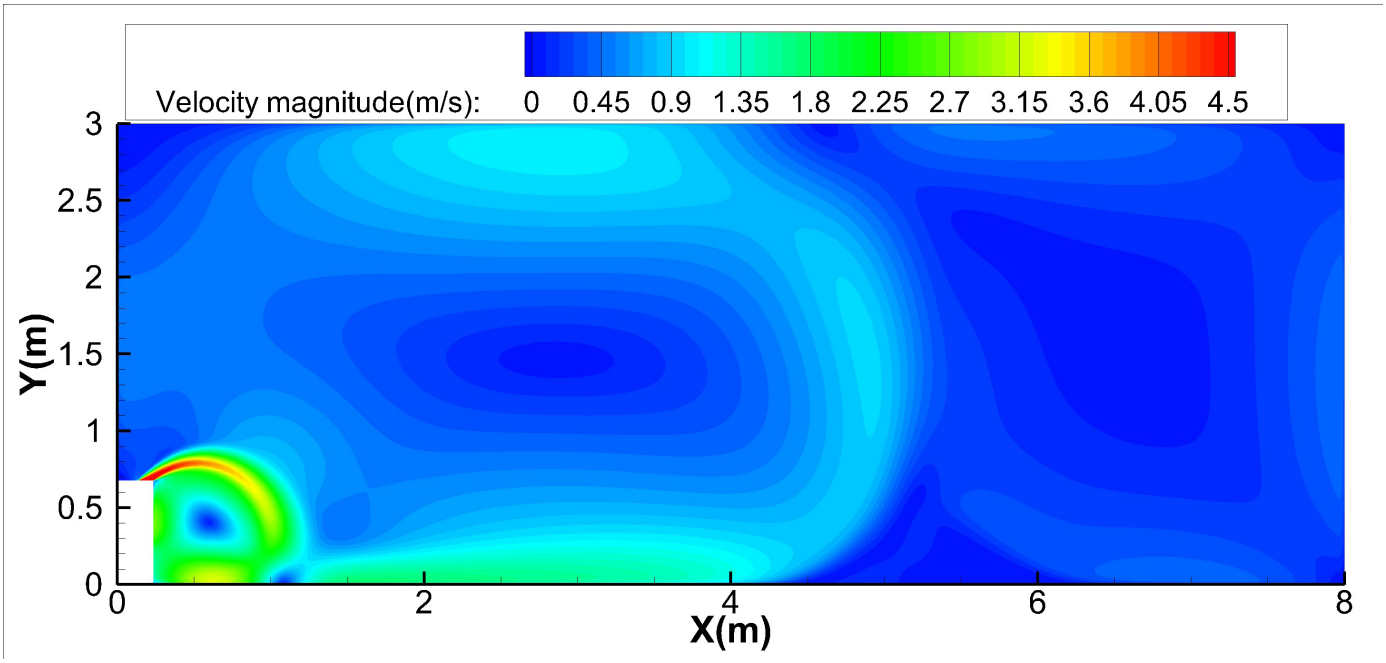

Heating temperature distributions

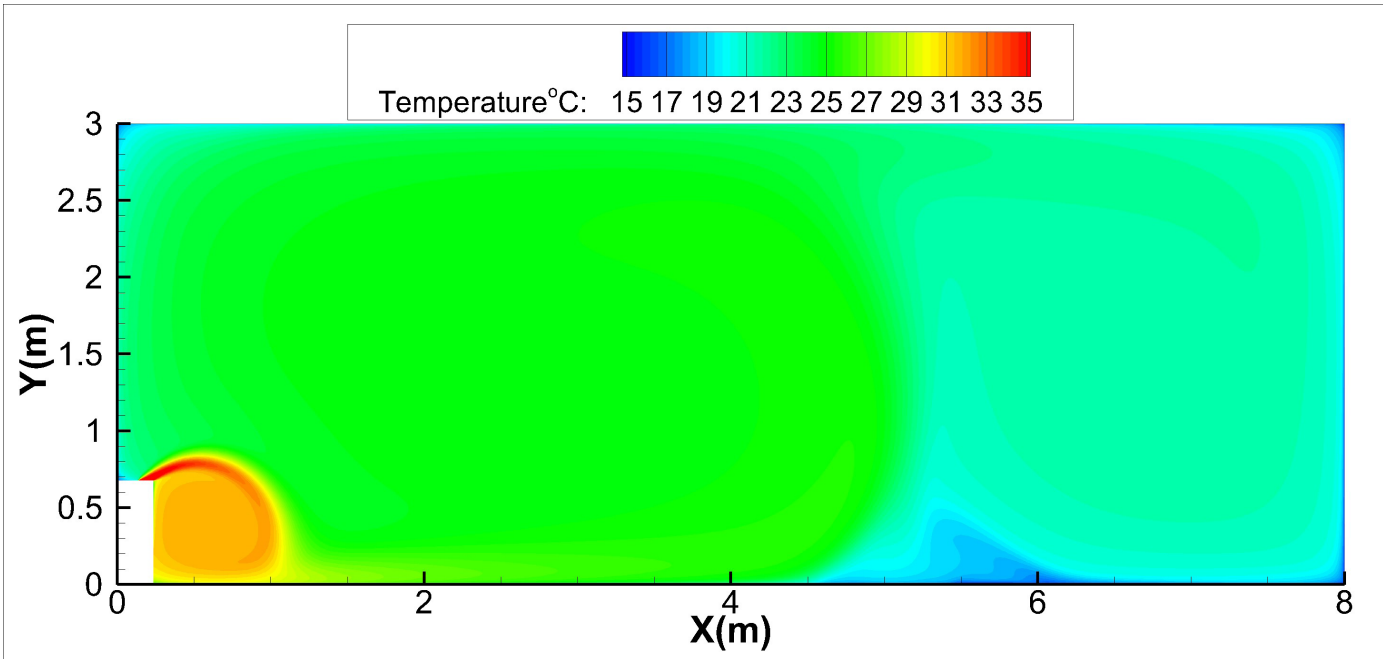

42K-Floor installation:

Discharge Angle 60°

Heating airflow velocity distributions

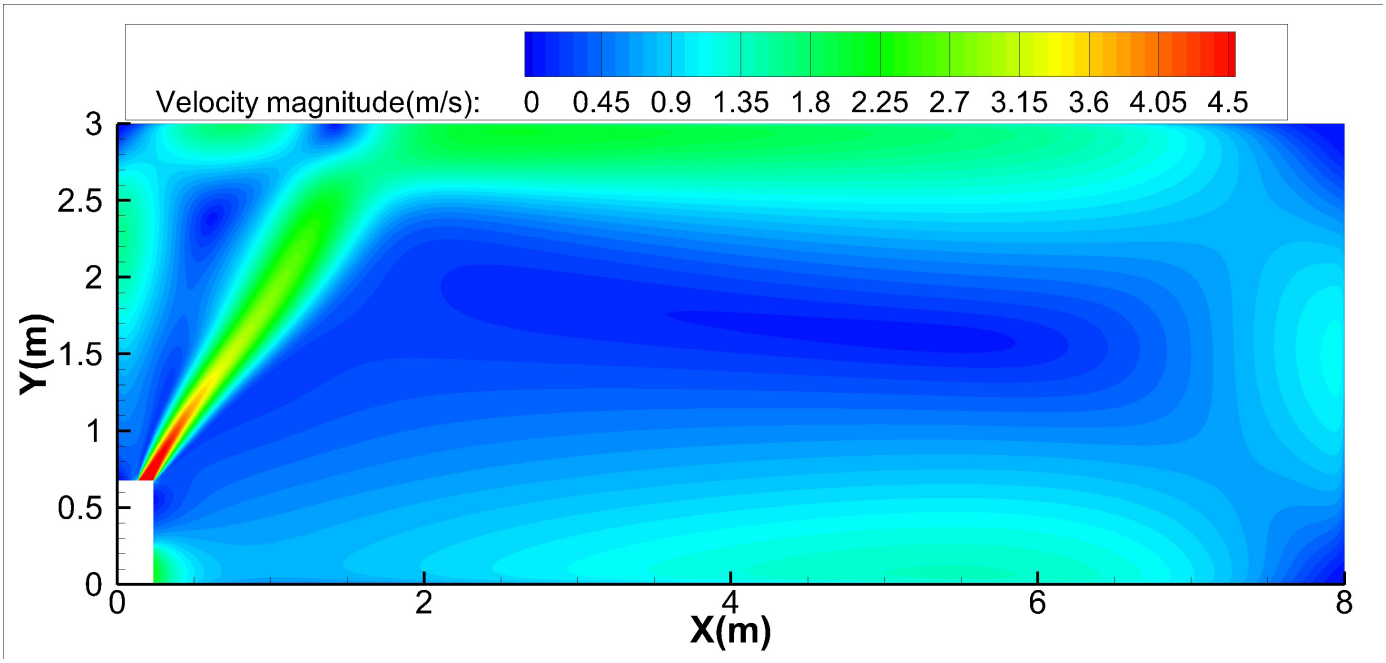

Heating temperature distributions

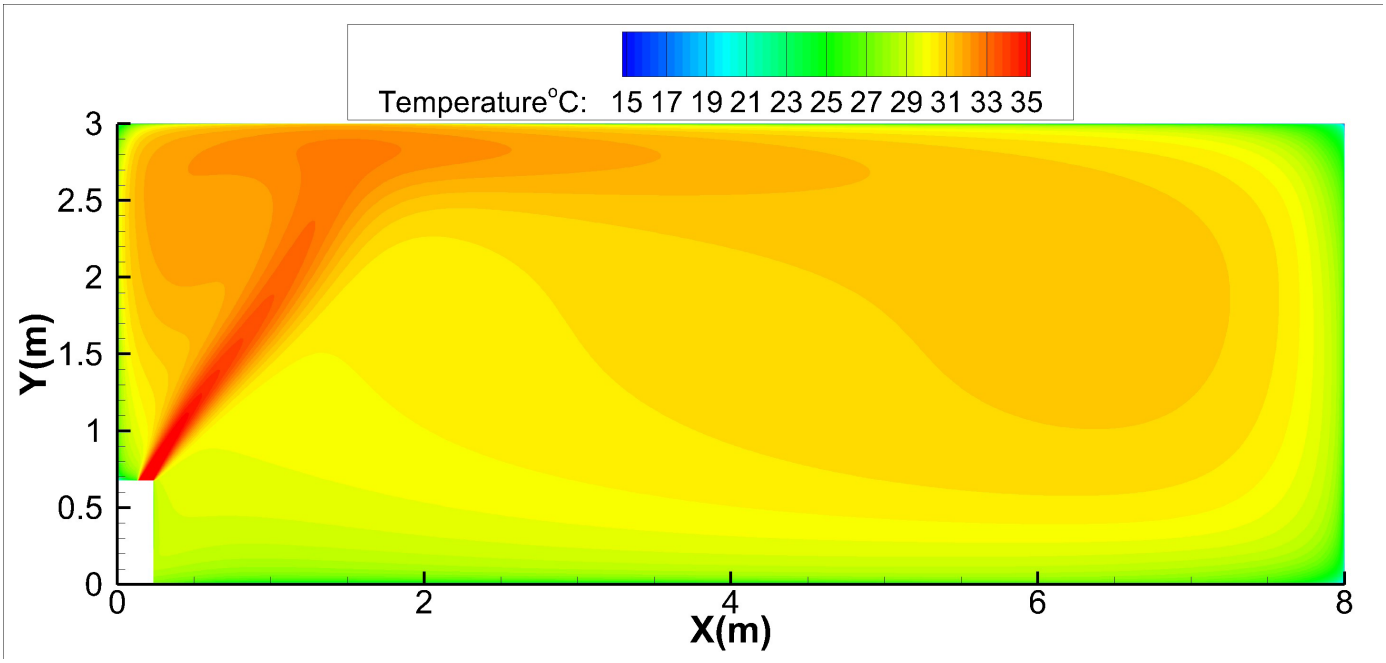

48K-Ceiling installation:

Discharge Angle 30°

Cooling airflow velocity distributions

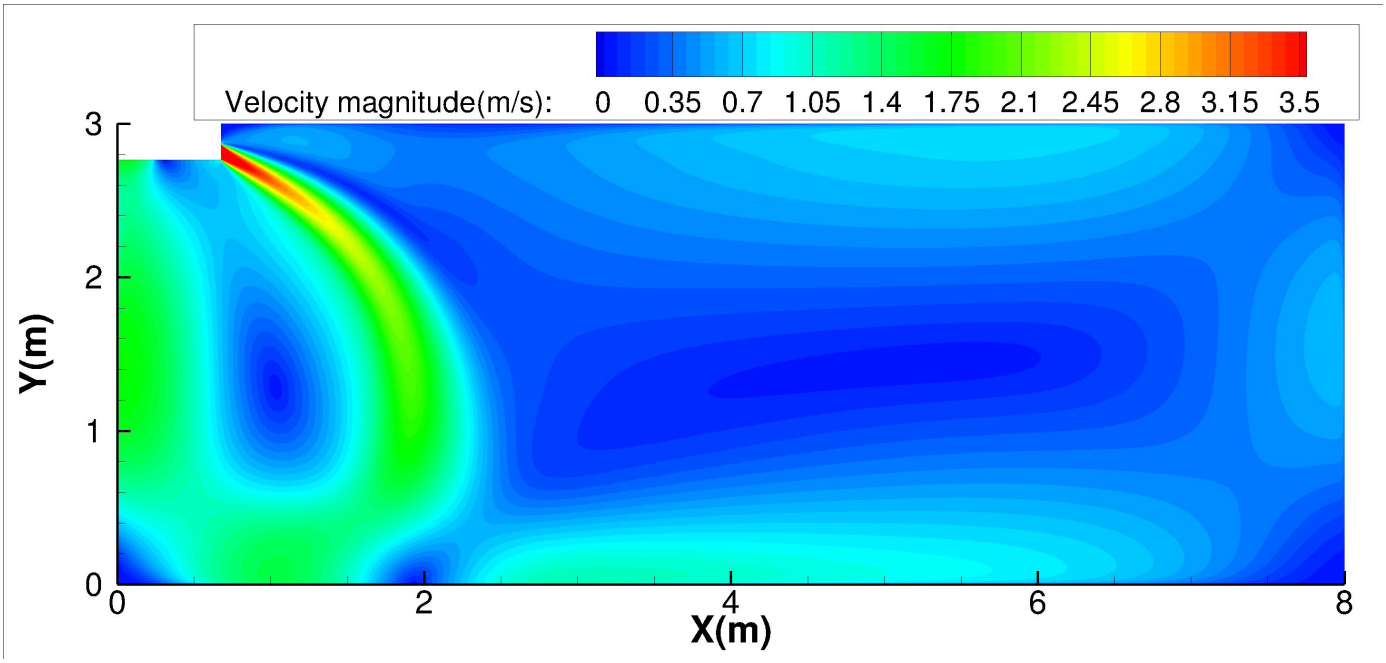

Cooling temperature distributions

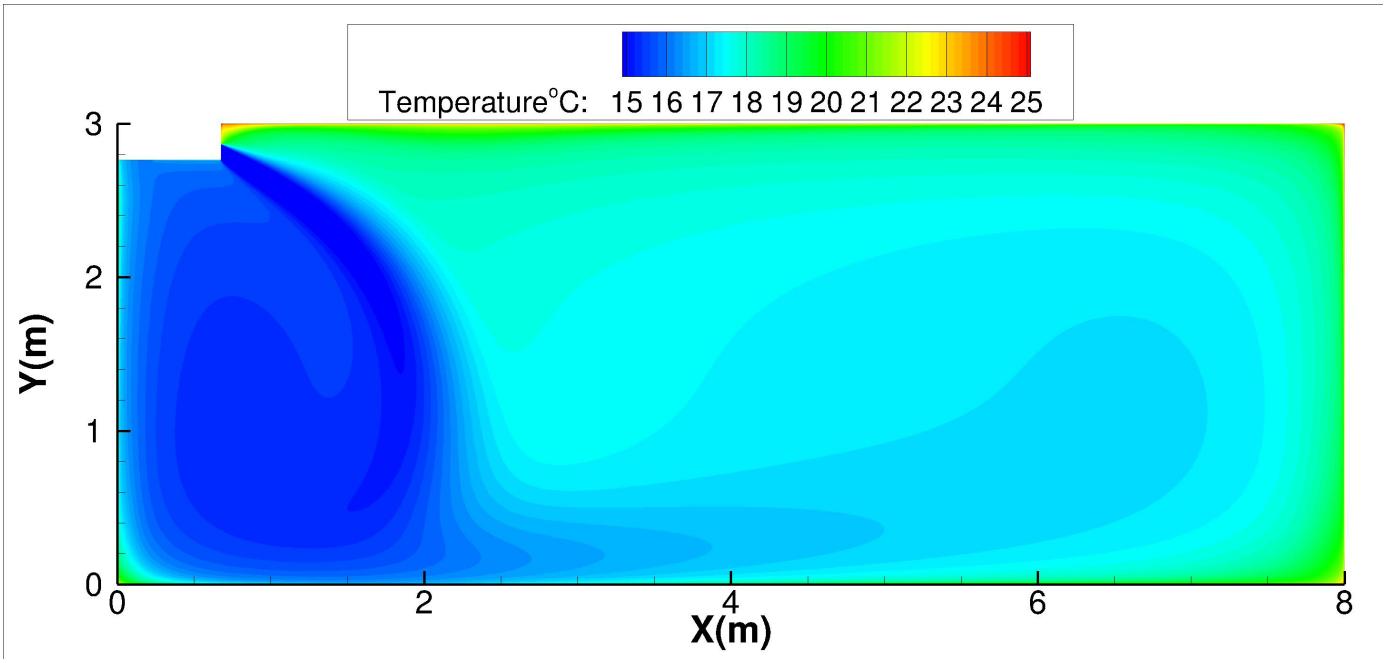

48K-Ceiling installation:

Discharge Angle 60°

Cooling airflow velocity distributions

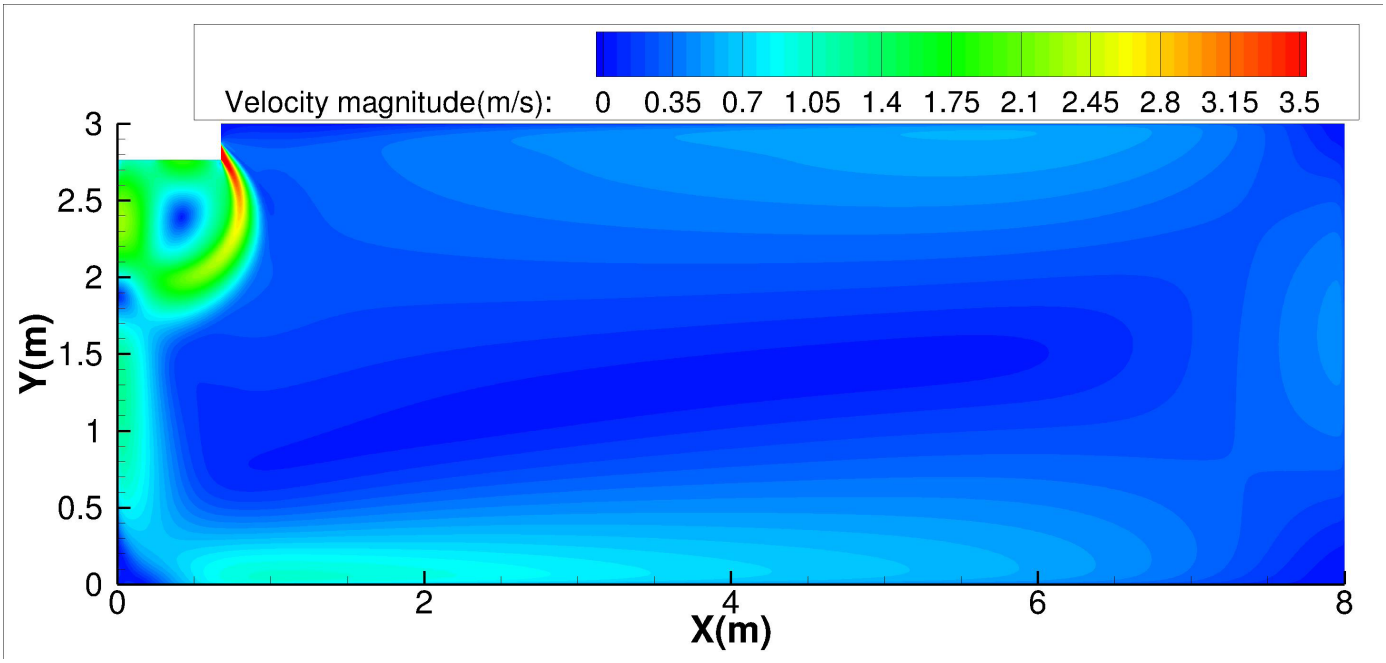

Cooling temperature distributions

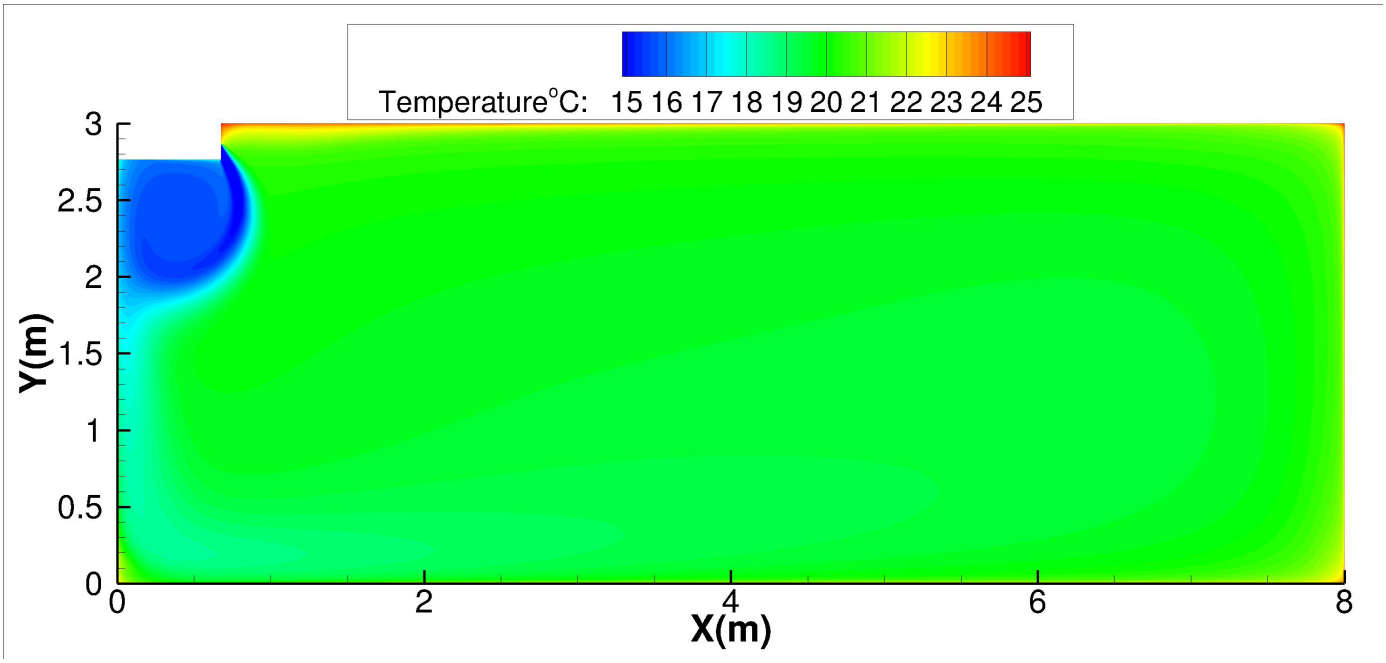

48K-Ceiling installation:

Discharge Angle 30°

Heating airflow velocity distributions

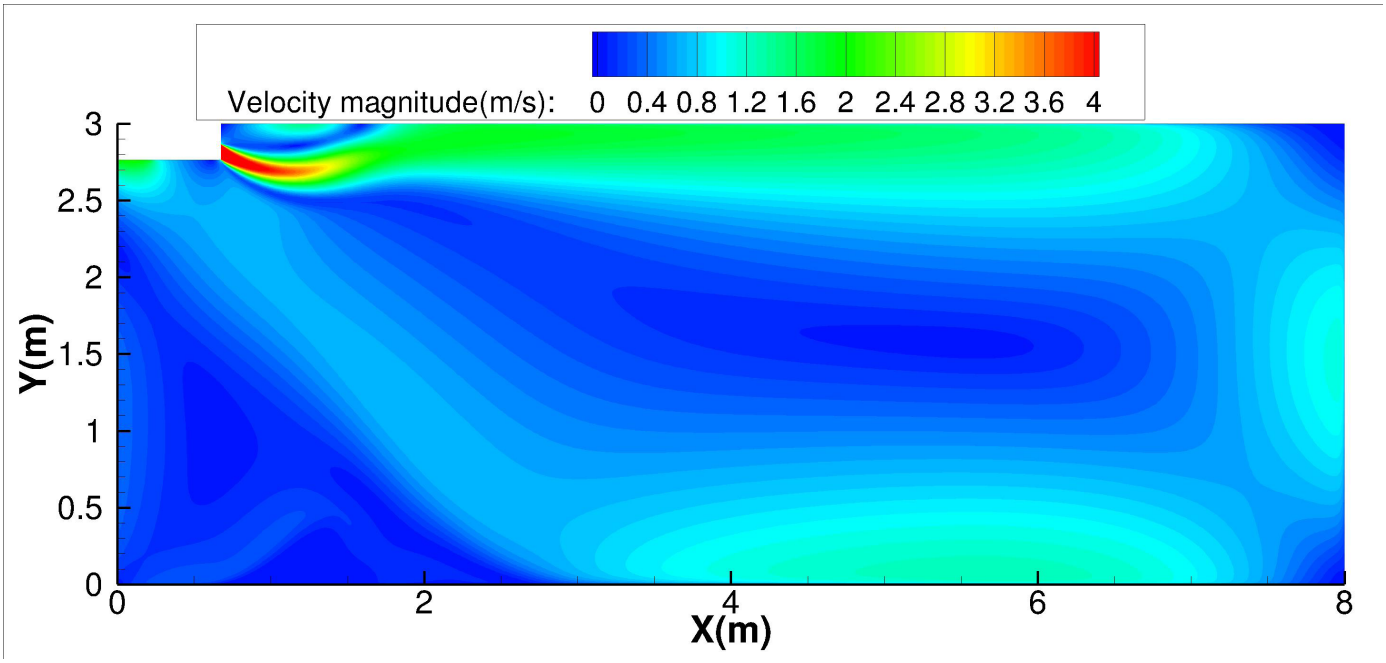

Heating temperature distributions

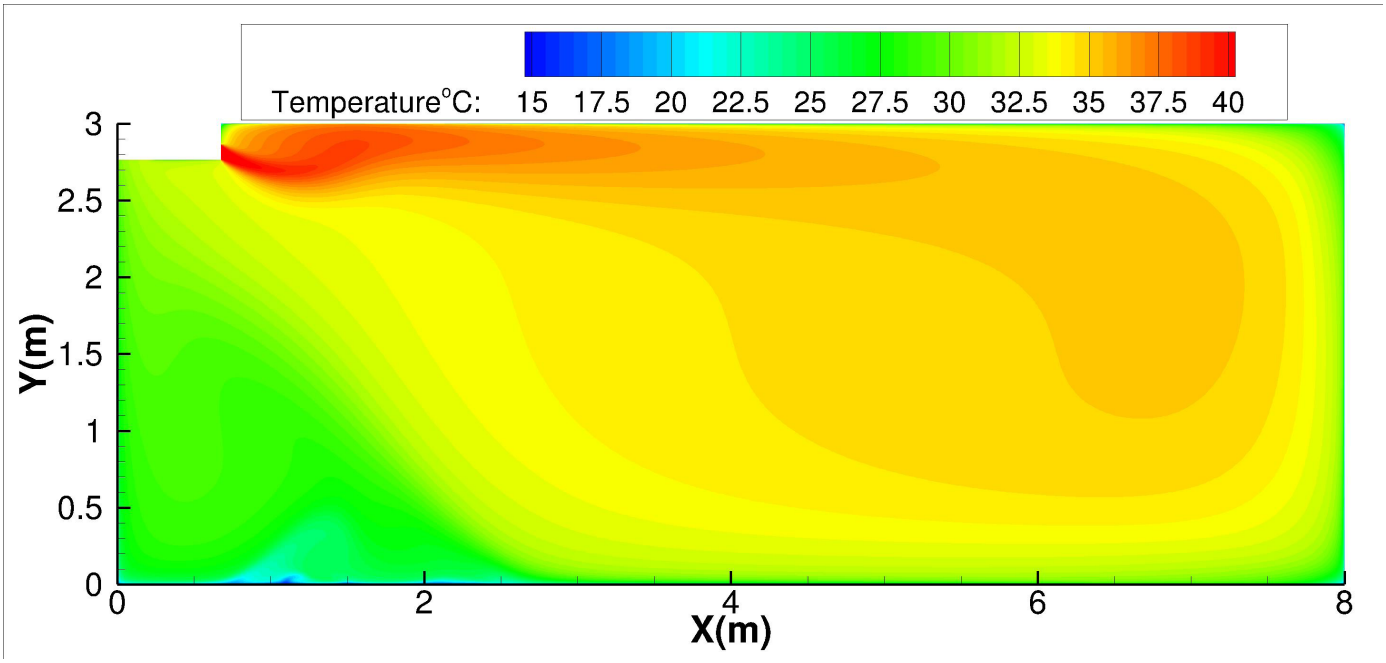

48K-Ceiling installation:

Discharge Angle 60°

Heating airflow velocity distributions

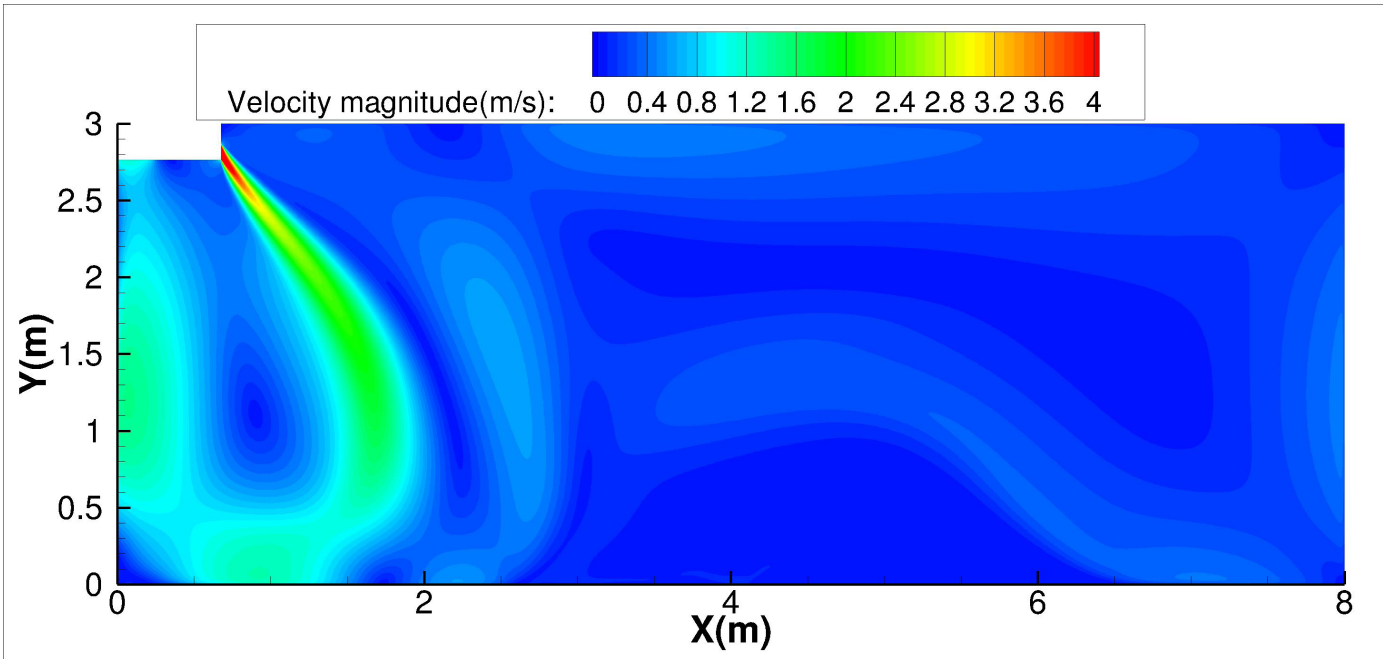

Heating temperature distributions

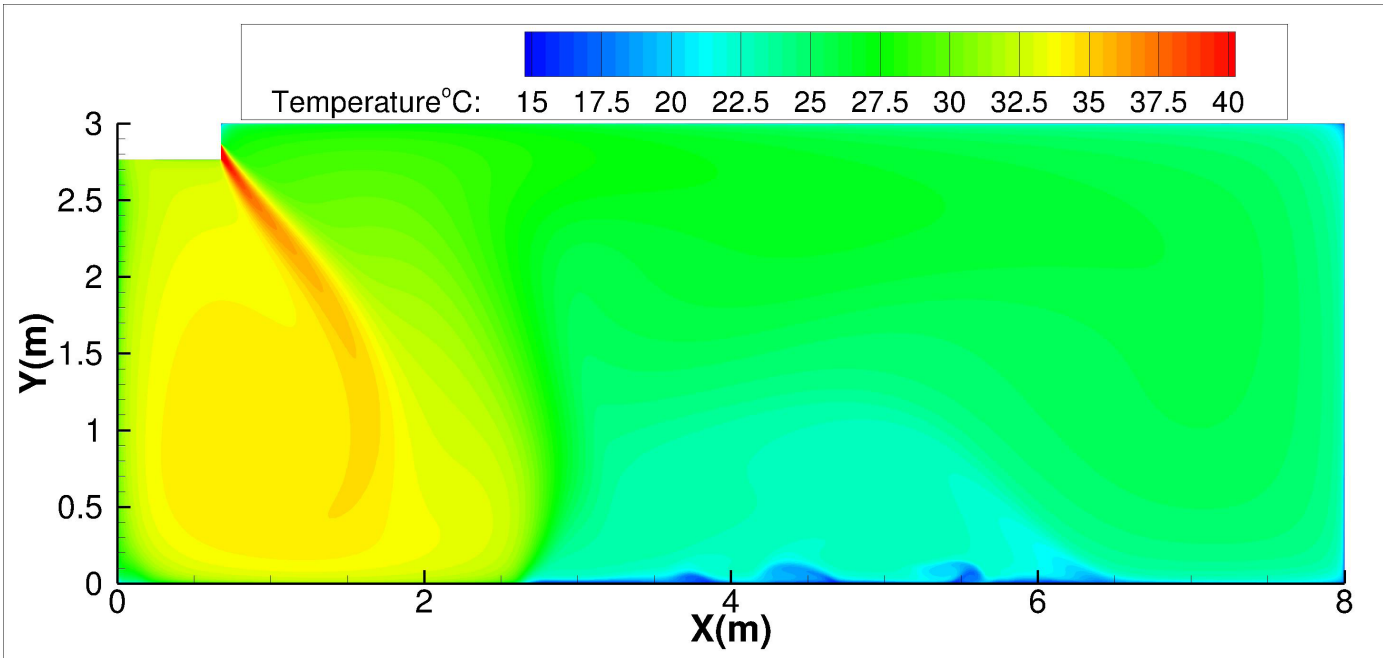

48K-Floor installation:

Discharge Angle 30°

Cooling airflow velocity distributions

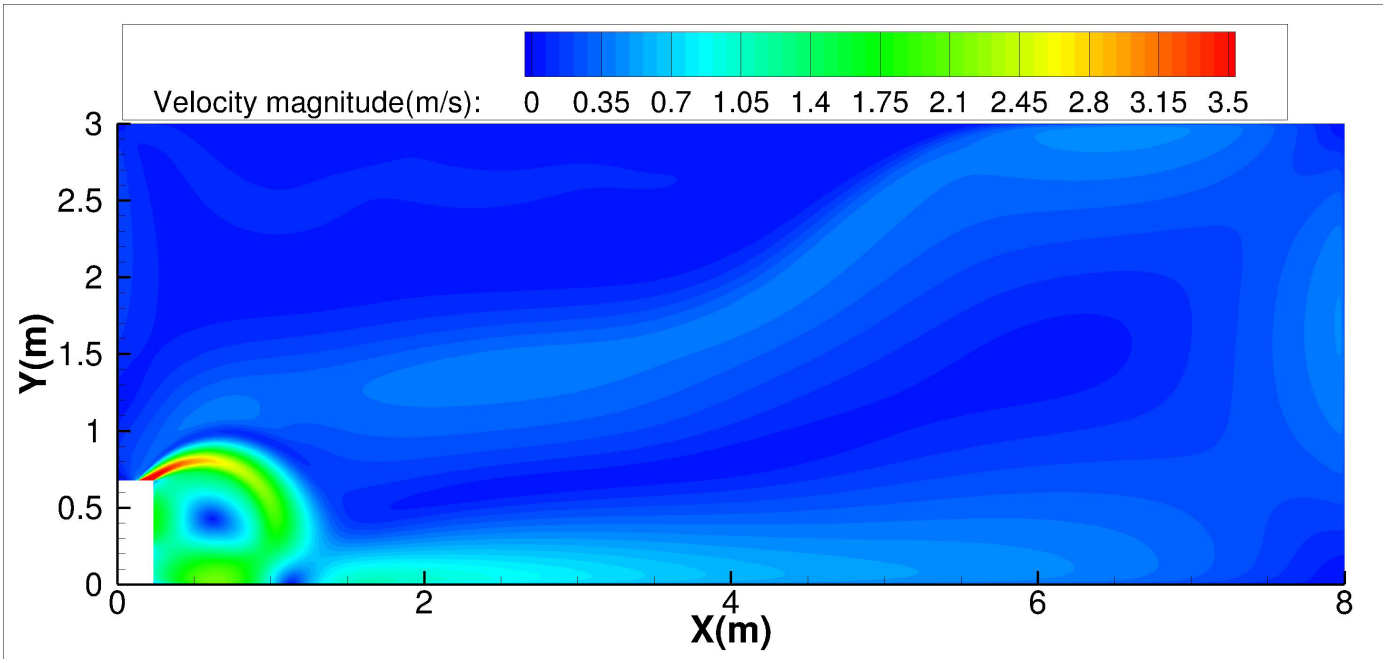

Cooling temperature distributions

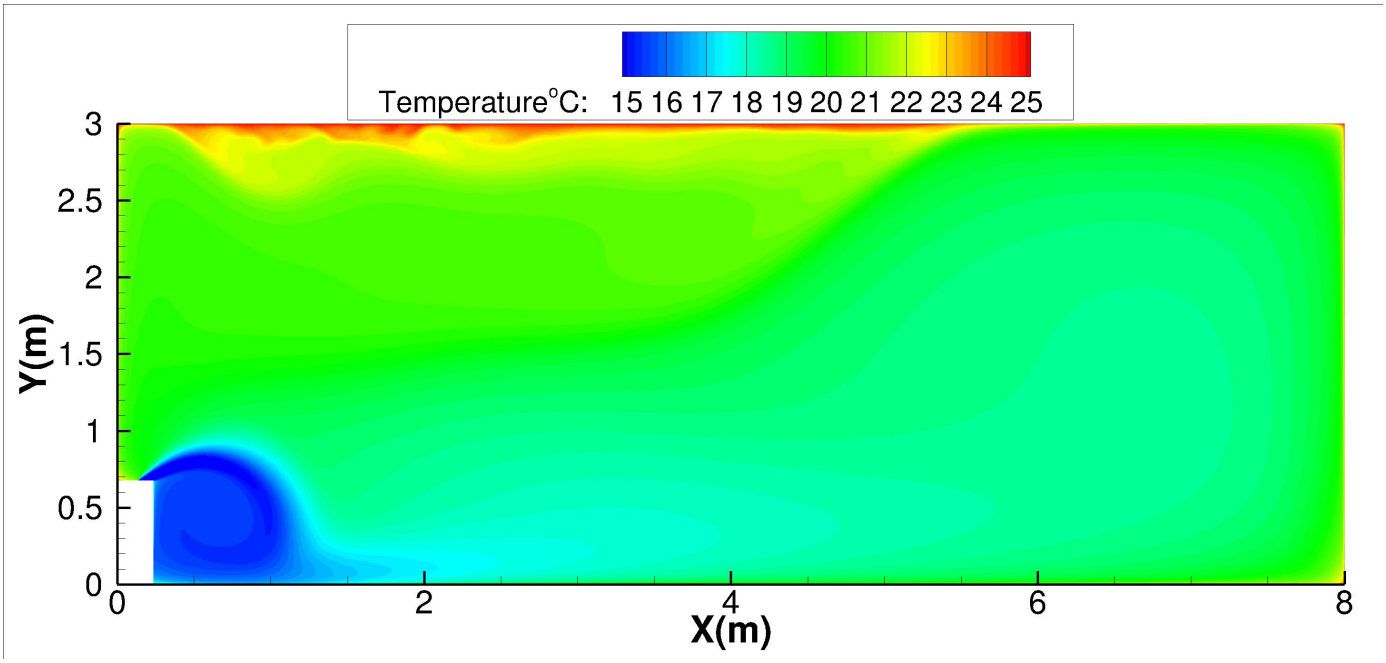

48K-Floor installation:

Discharge Angle 60°

Cooling airflow velocity distributions

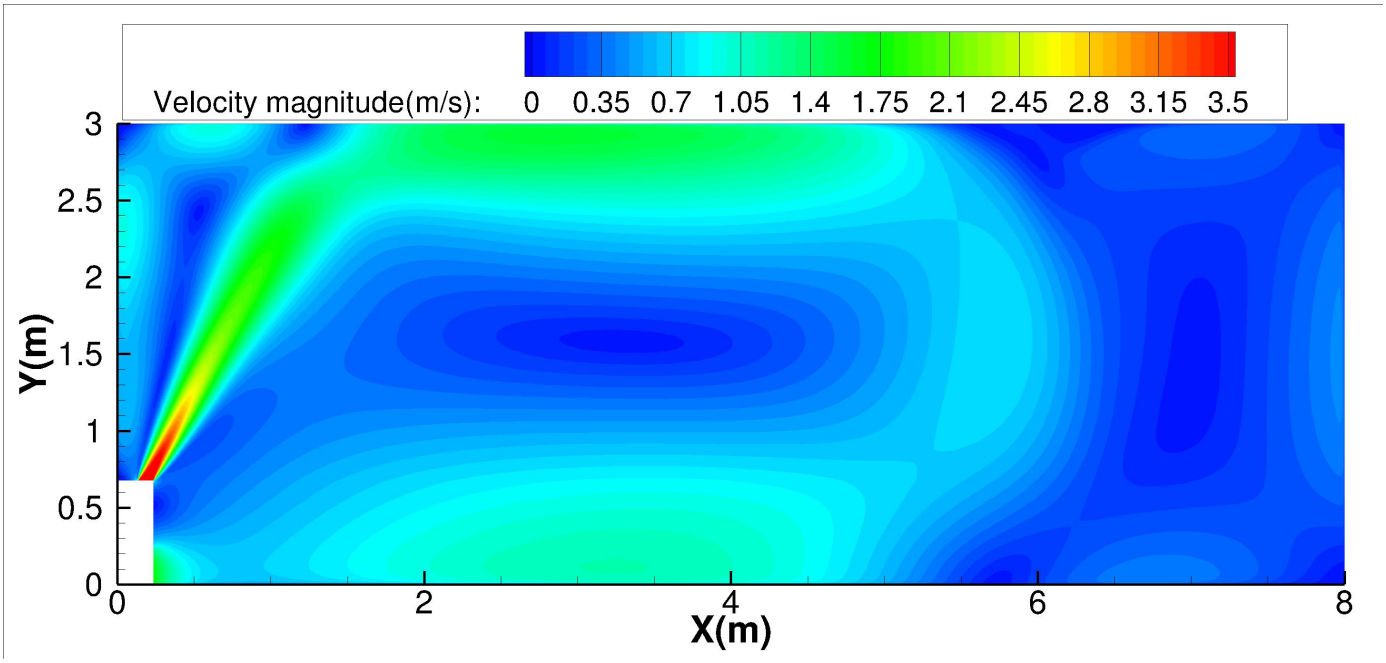

Cooling temperature distributions

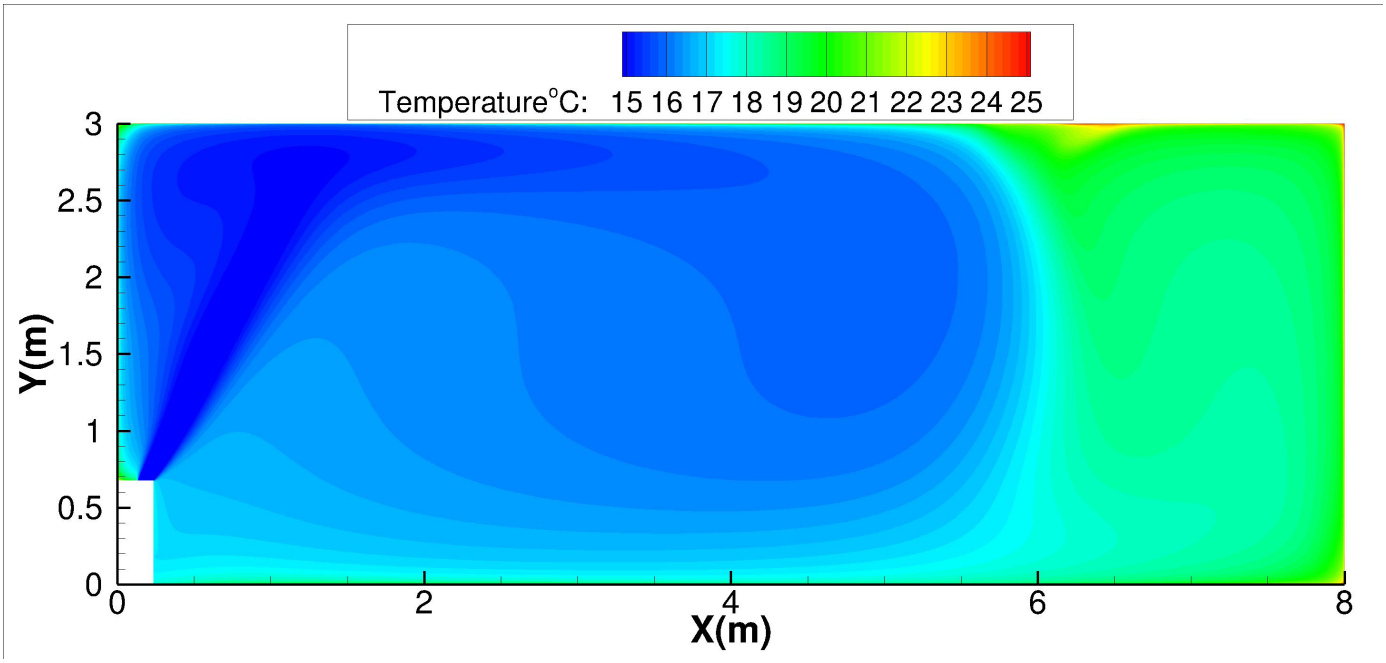

48K-Floor installation:

Discharge Angle 30°

Heating airflow velocity distributions

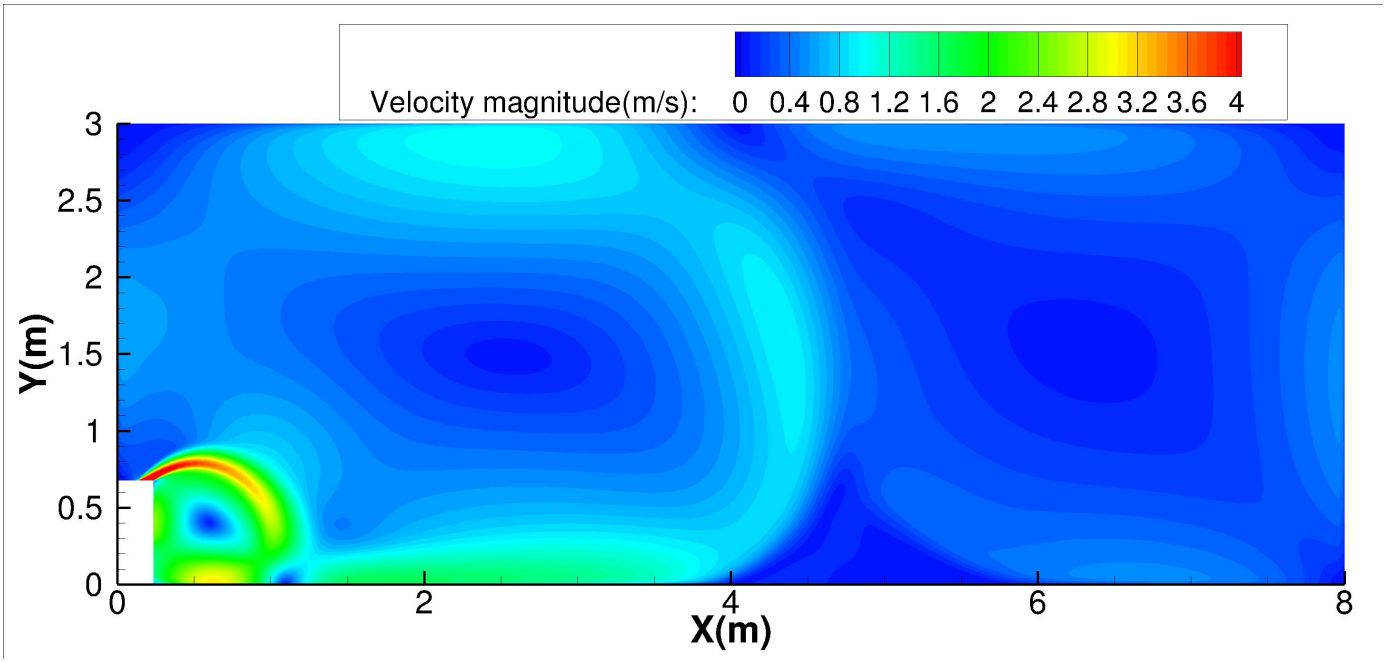

Heating temperature distributions

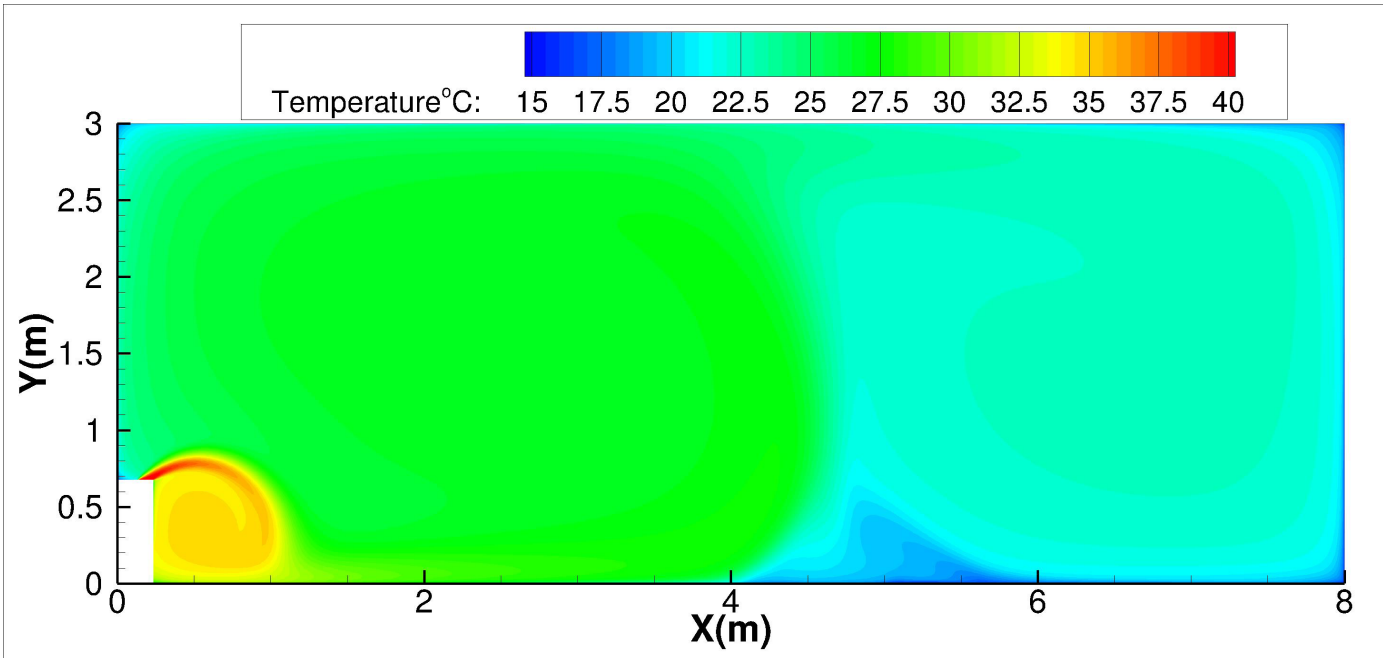

48K-Floor installation:

Discharge Angle 60°

Heating airflow velocity distributions

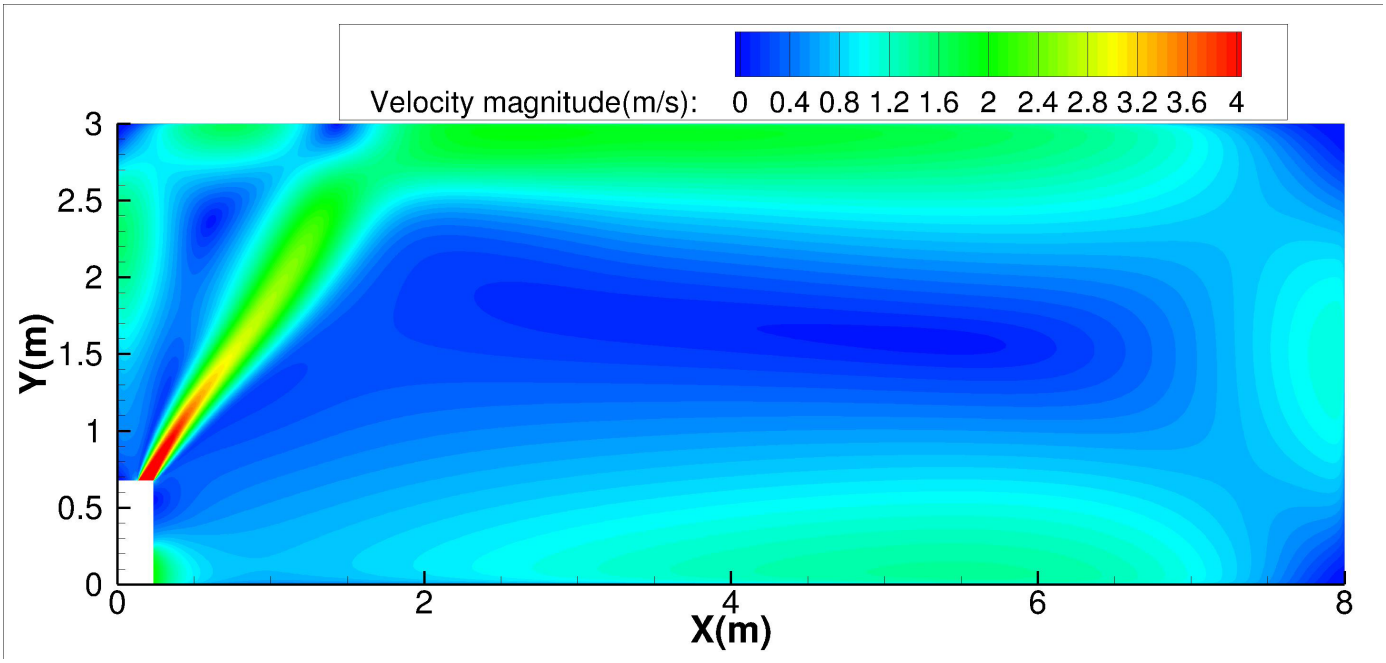

Heating temperature distributions

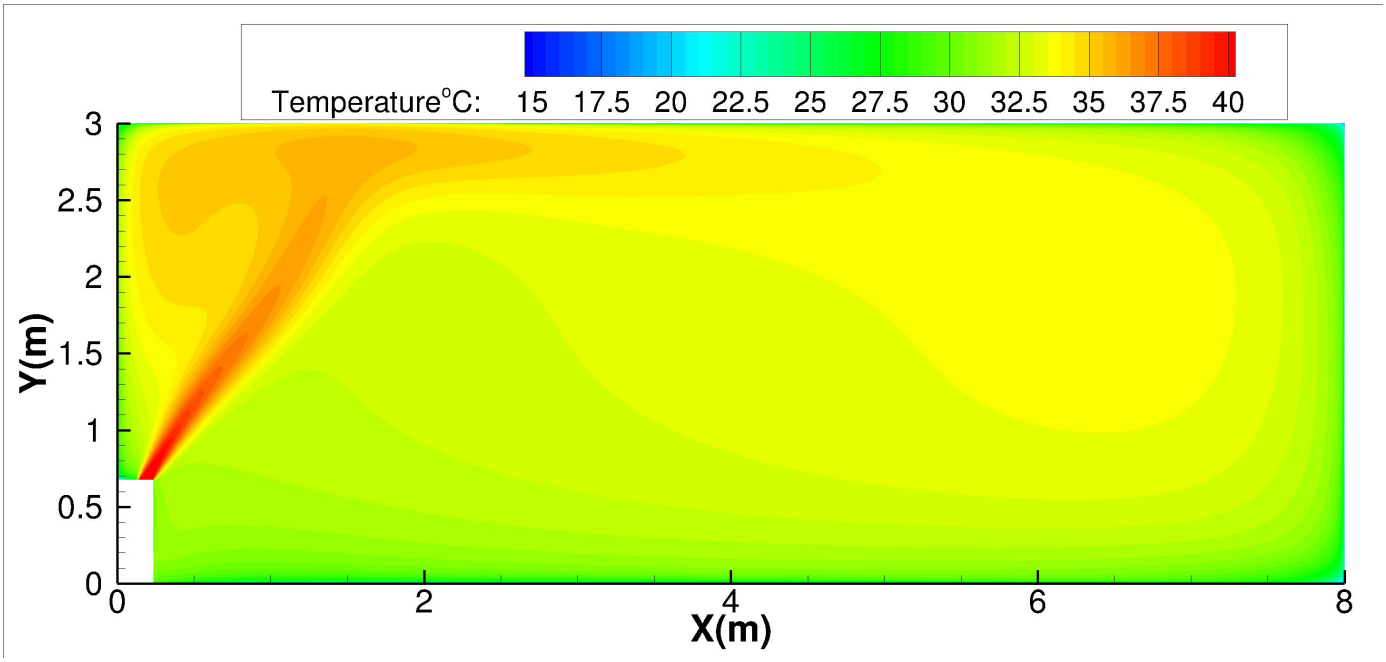

60K-Ceiling installation:

Discharge Angle 30°

Cooling airflow velocity distributions

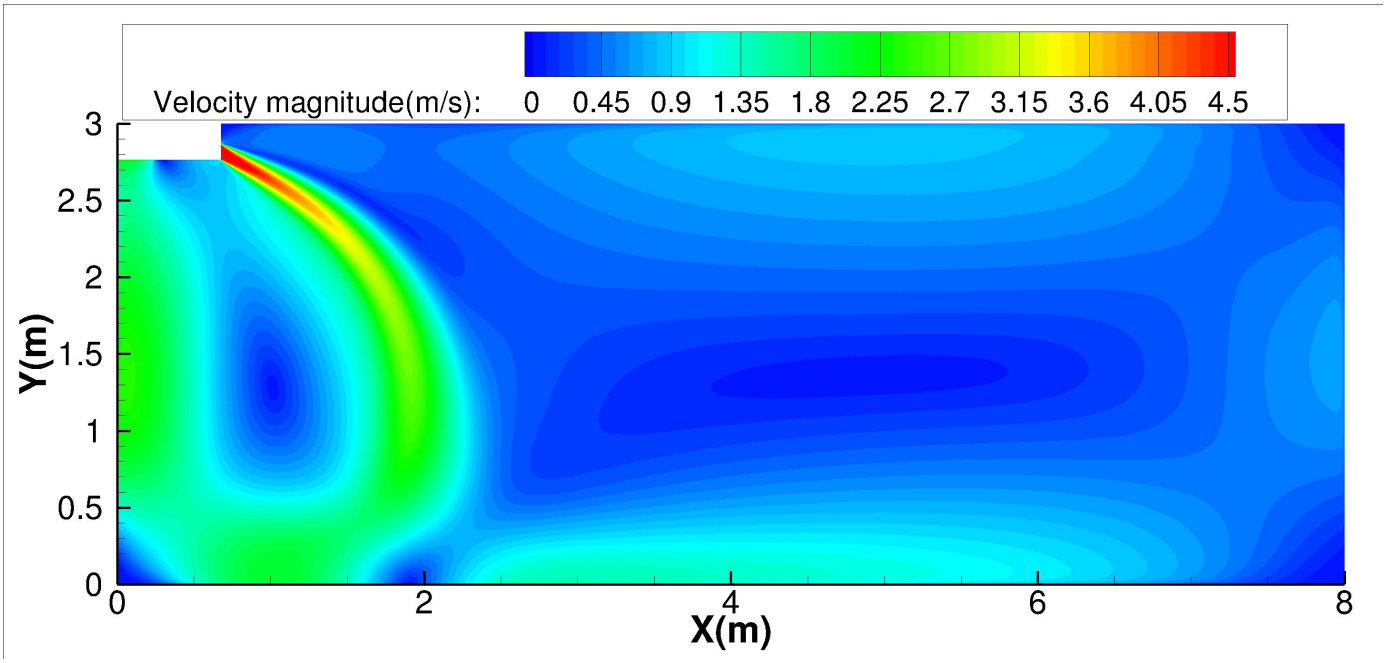

Cooling temperature distributions

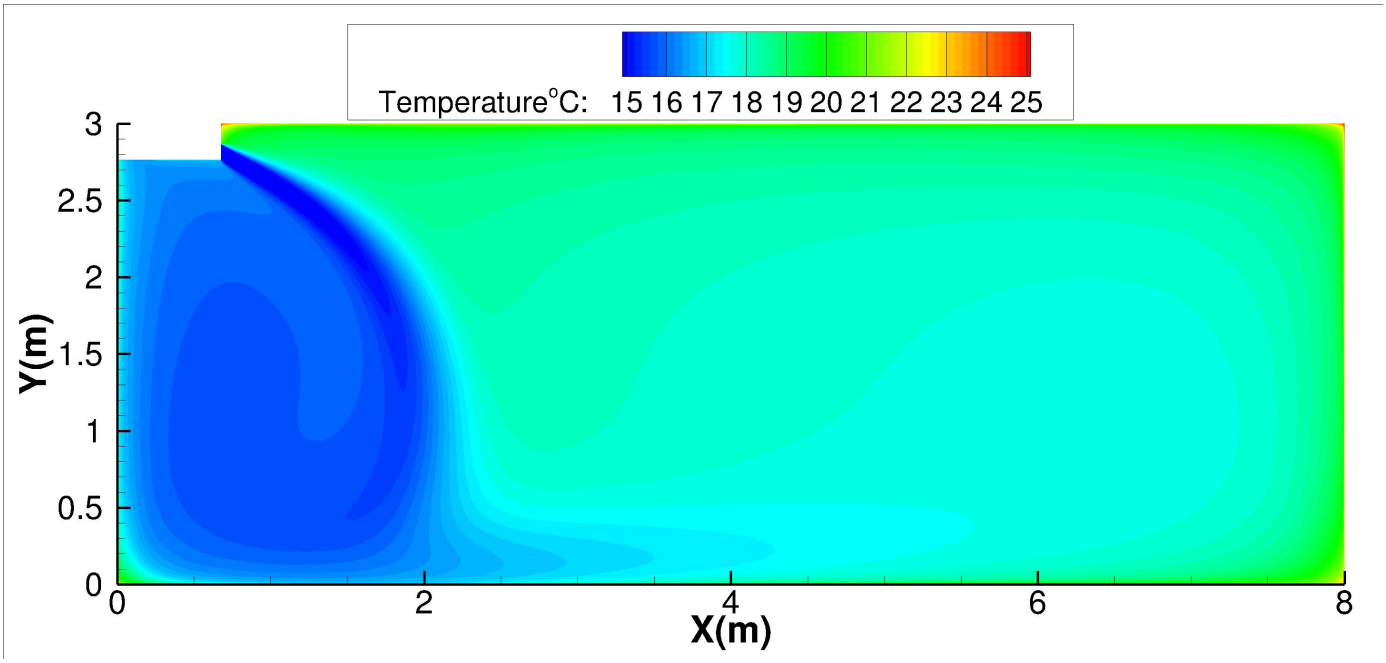

60K-Ceiling installation:

Discharge Angle 60°

Cooling airflow velocity distributions

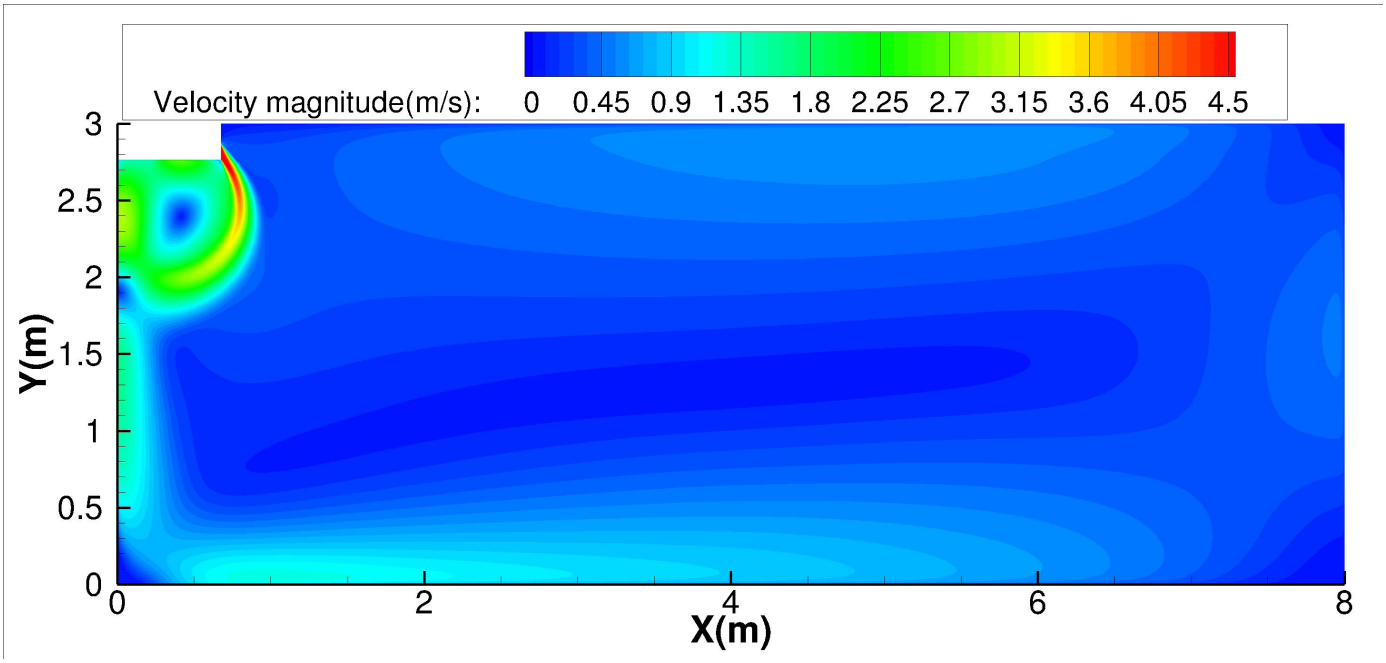

Cooling temperature distributions

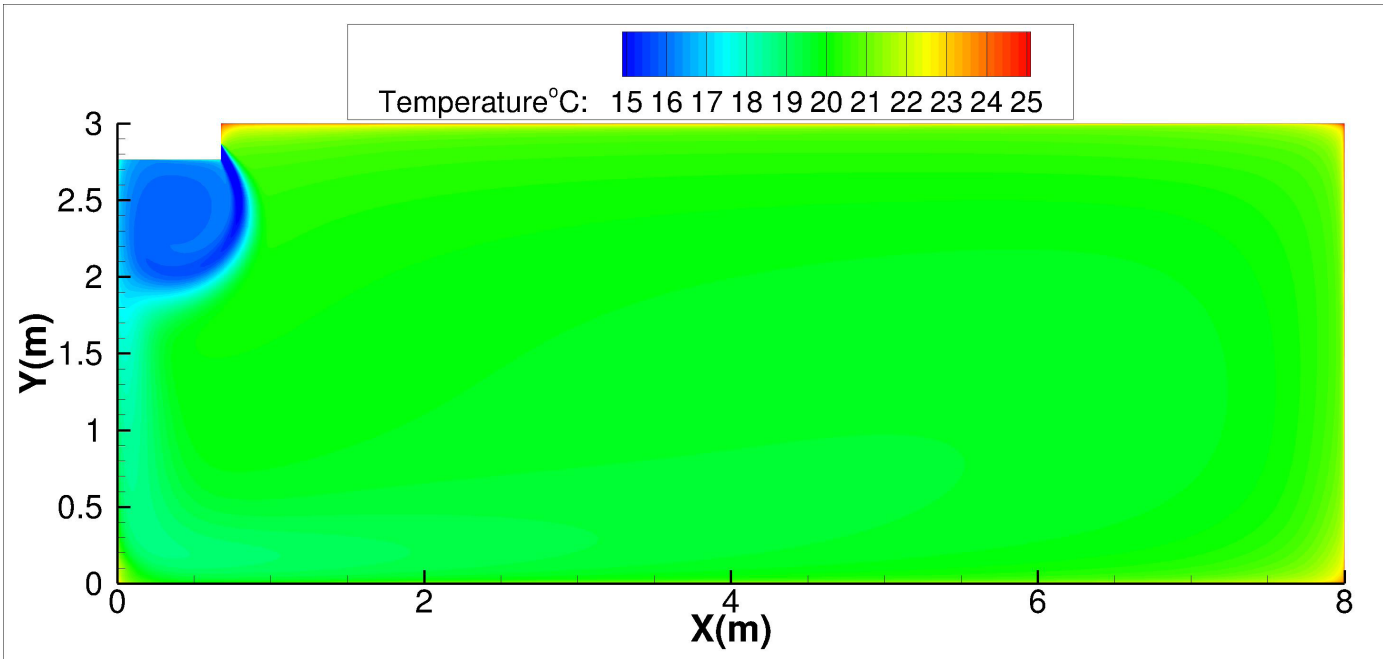

60K-Ceiling installation:

Discharge Angle 30°

Heating airflow velocity distributions

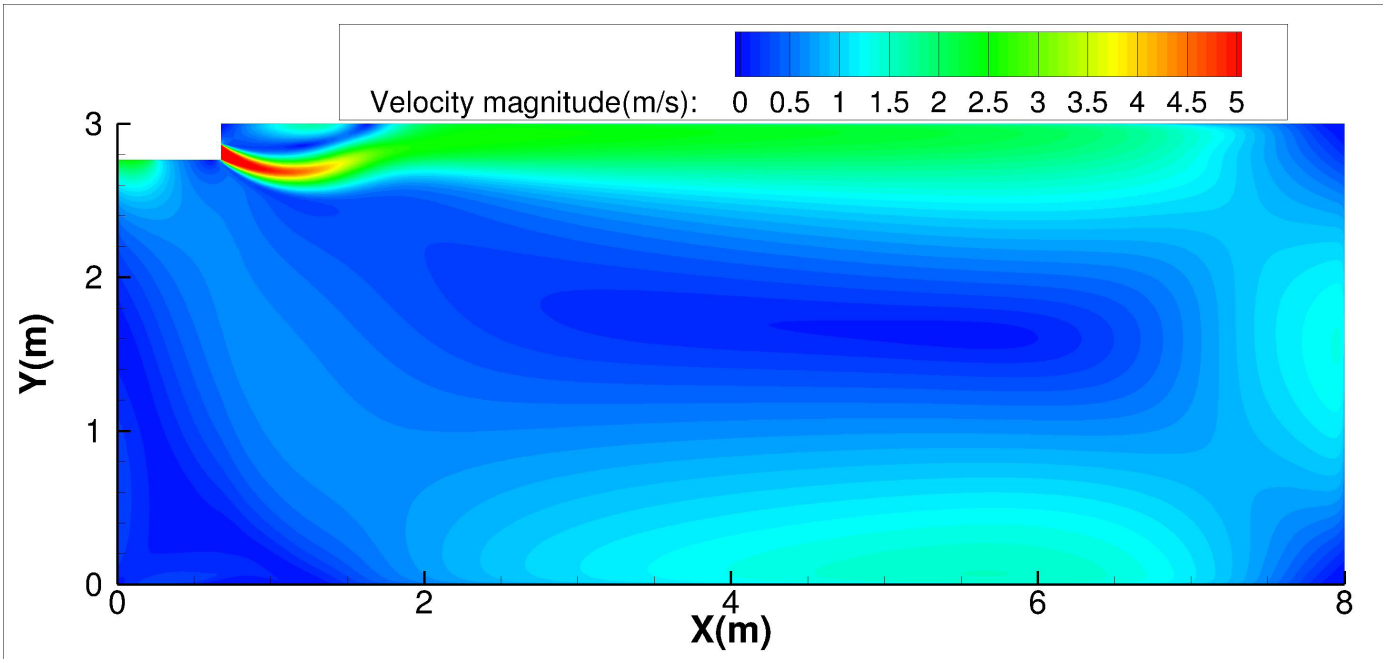

Heating temperature distributions

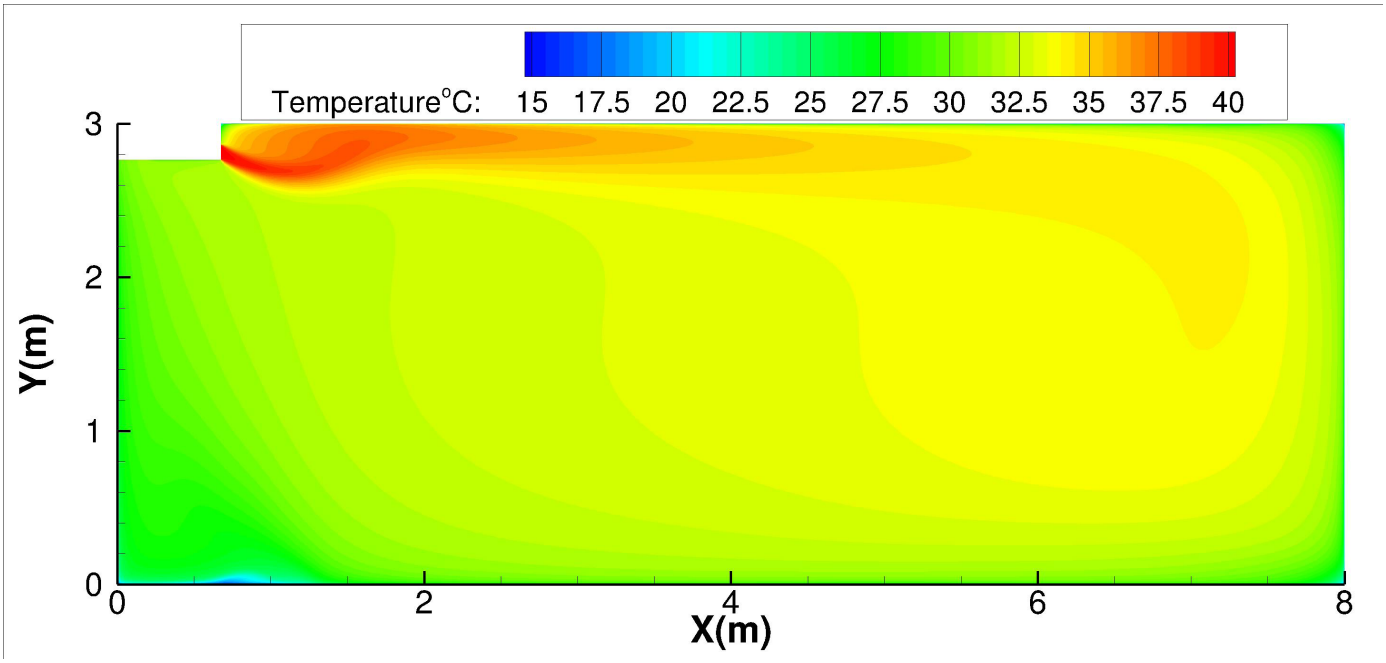

60K-Ceiling installation:

Discharge Angle 60°

Heating airflow velocity distributions

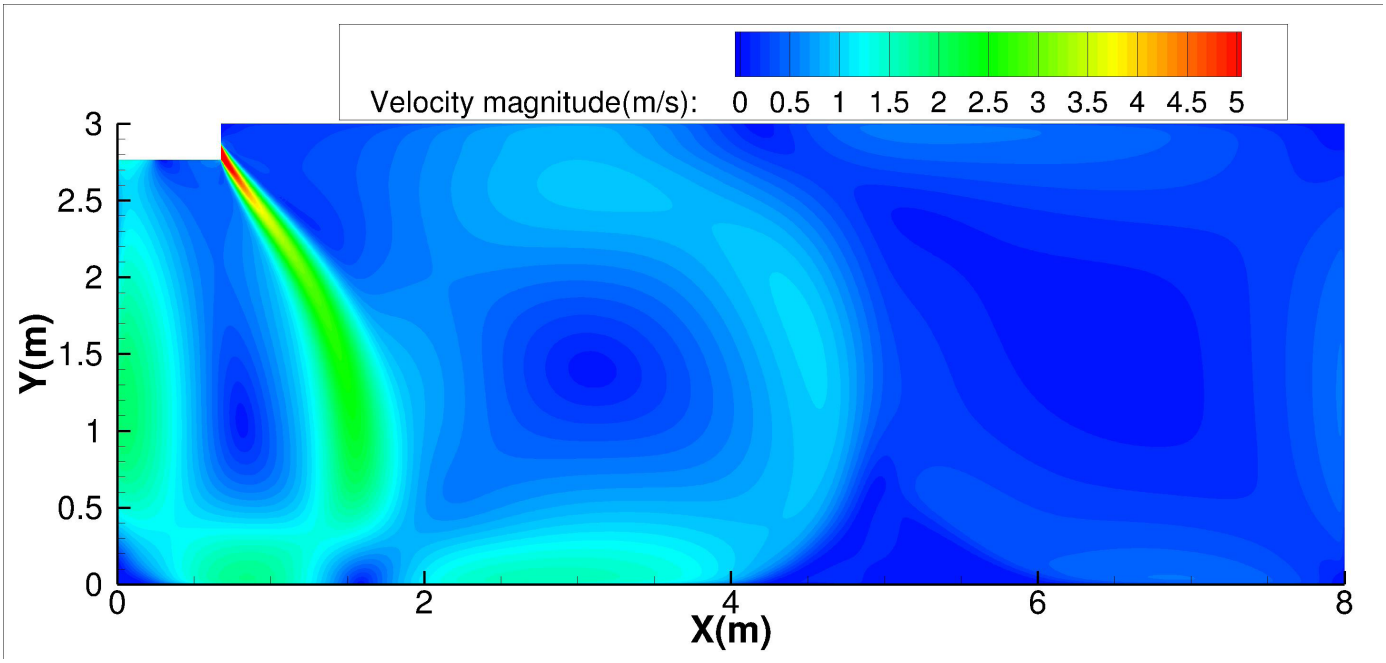

Heating temperature distributions

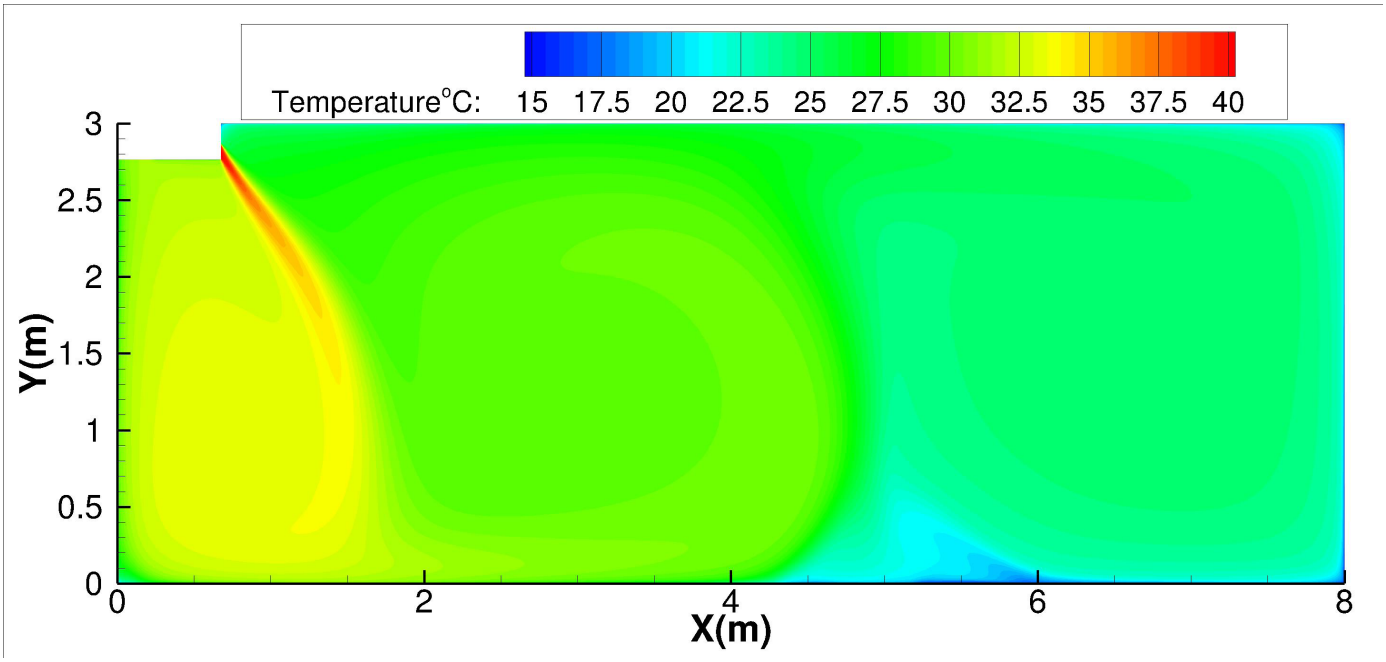

60K-Floor installation:

Discharge Angle 30°

Cooling airflow velocity distributions

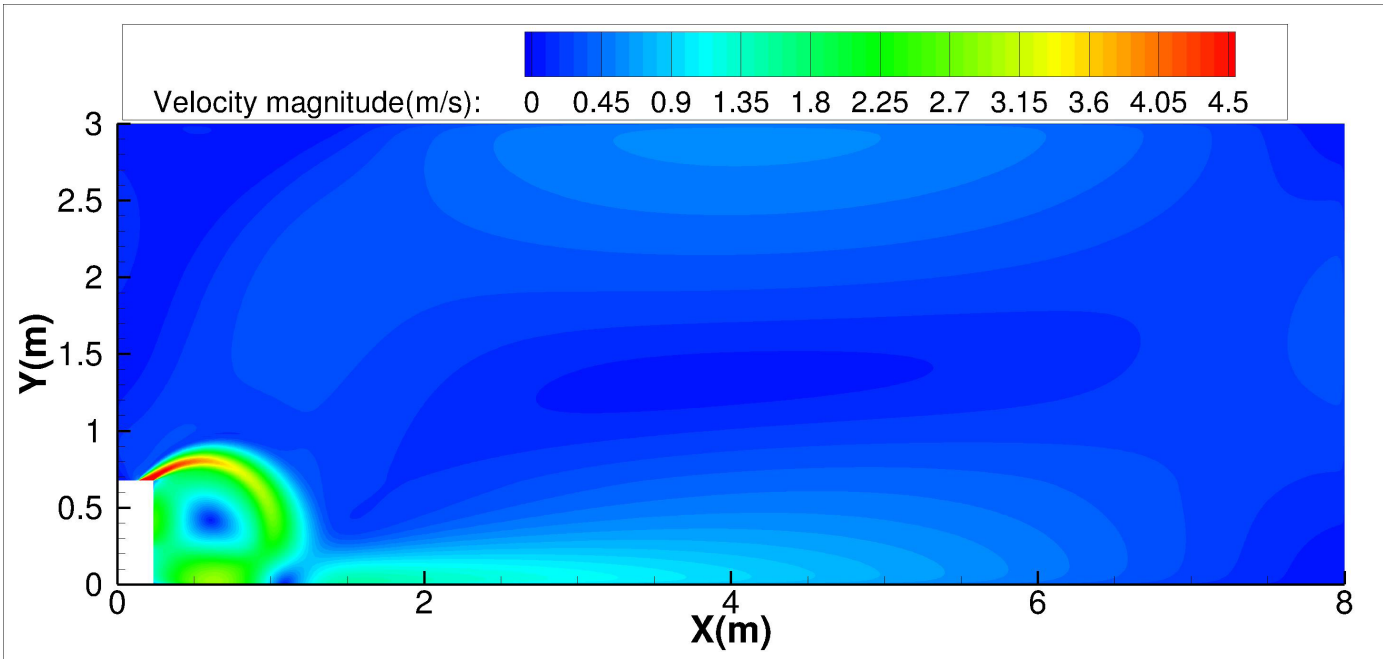

Cooling temperature distributions

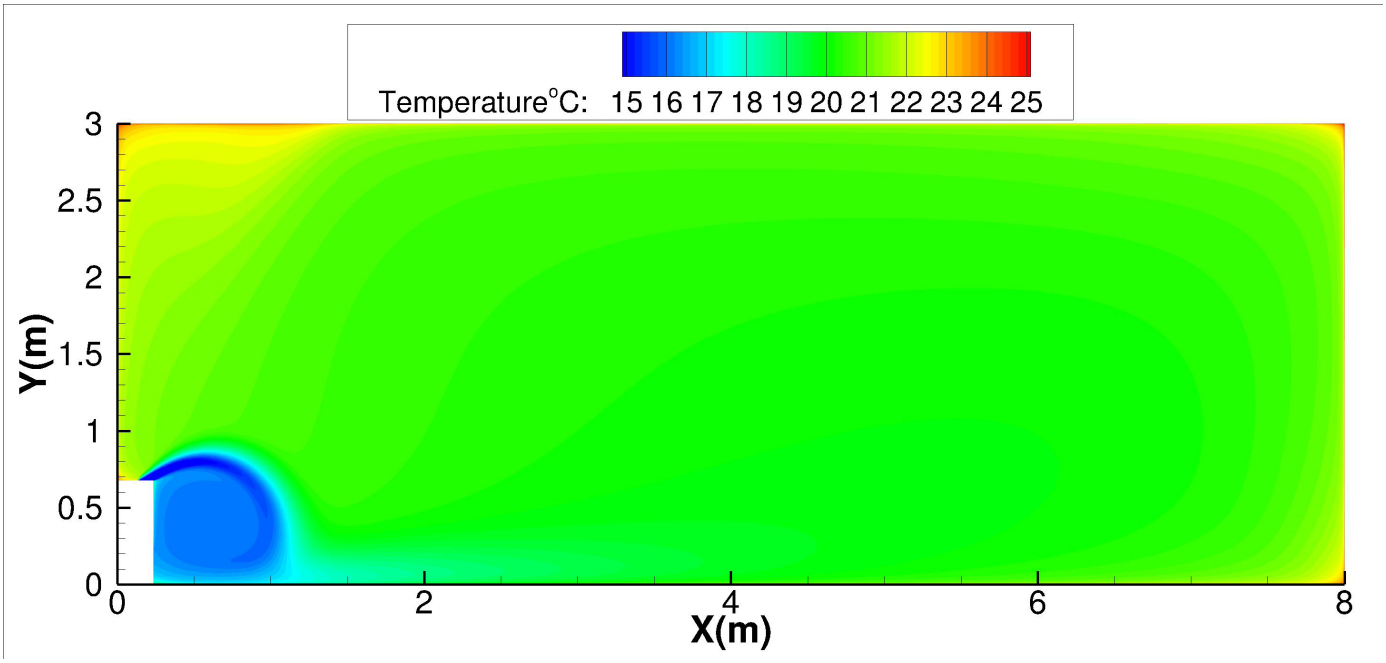

60K-Floor installation:

Discharge Angle 60°

Cooling airflow velocity distributions

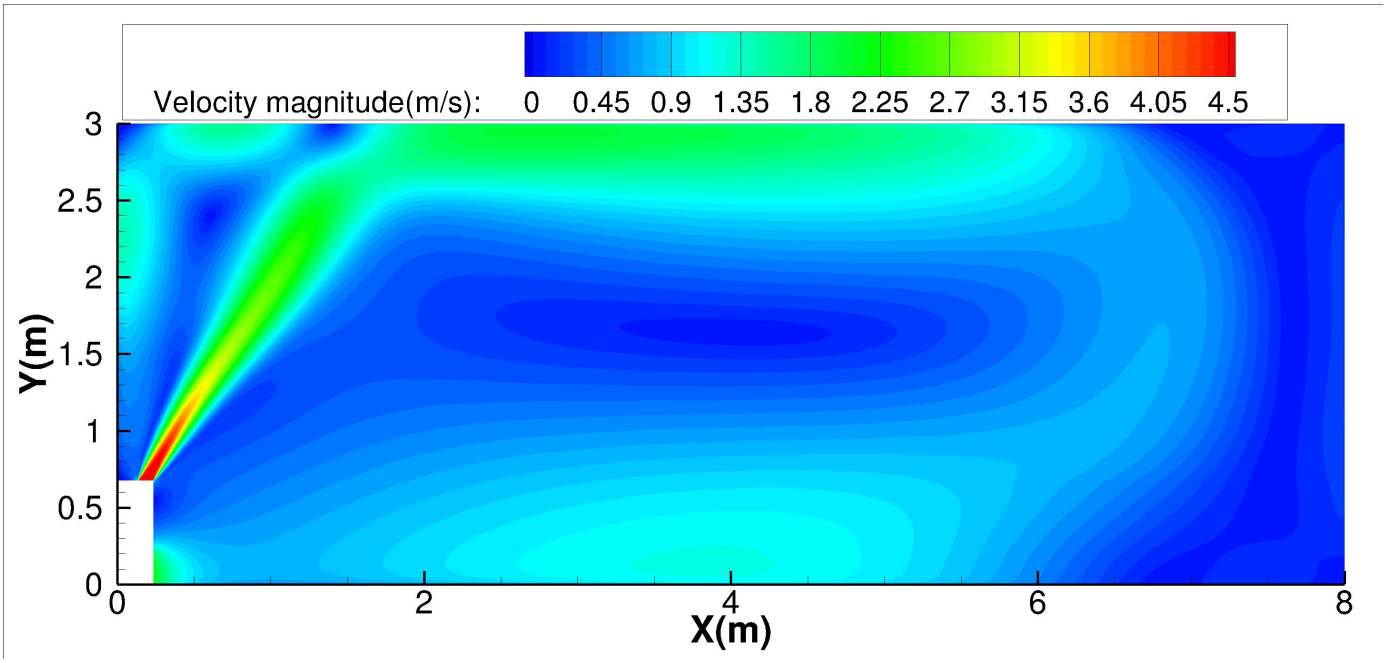

Cooling temperature distributions

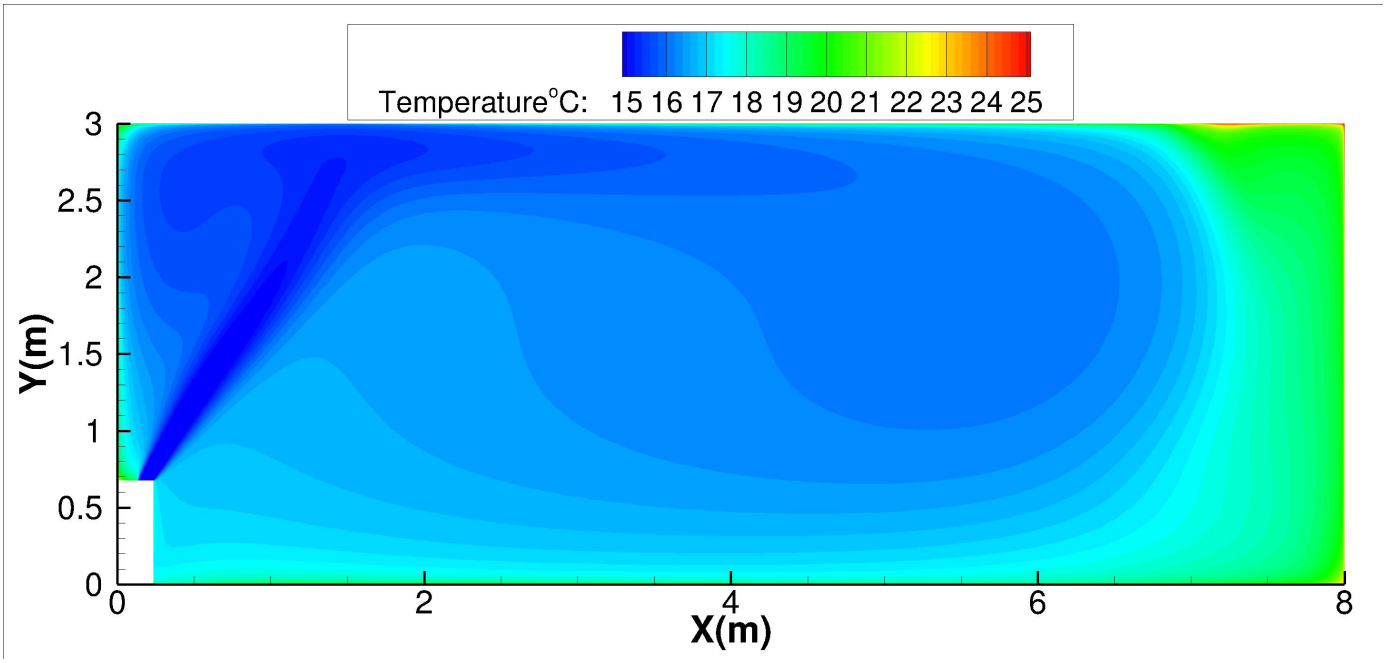

60K-Floor installation:

Discharge Angle 30°

Heating airflow velocity distributions

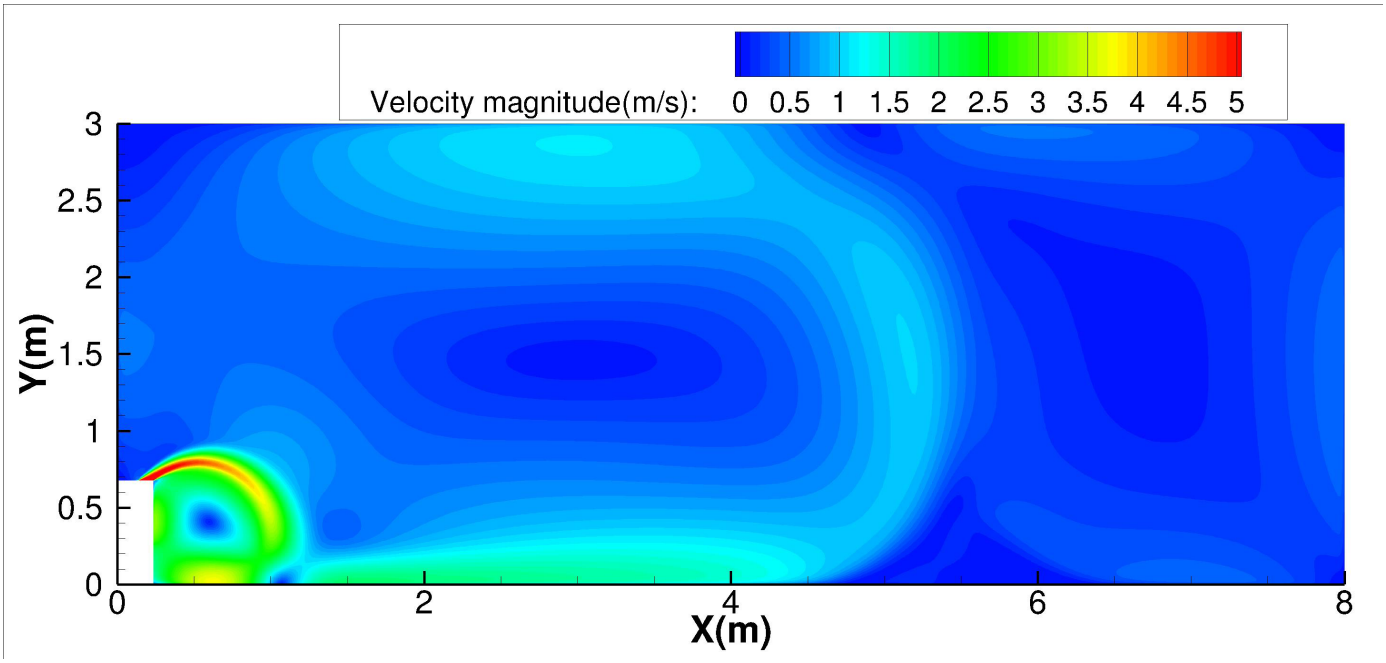

Heating temperature distributions

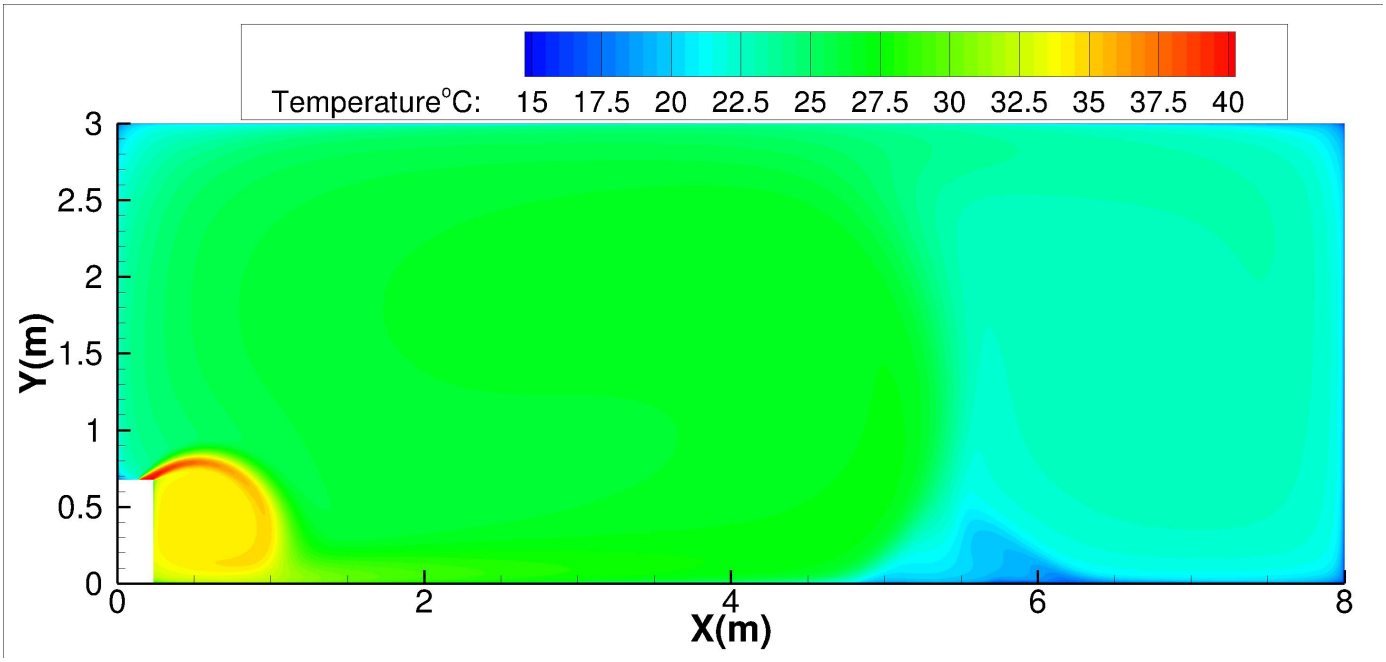

60K-Floor installation:

Discharge Angle 60°

Heating airflow velocity distributions

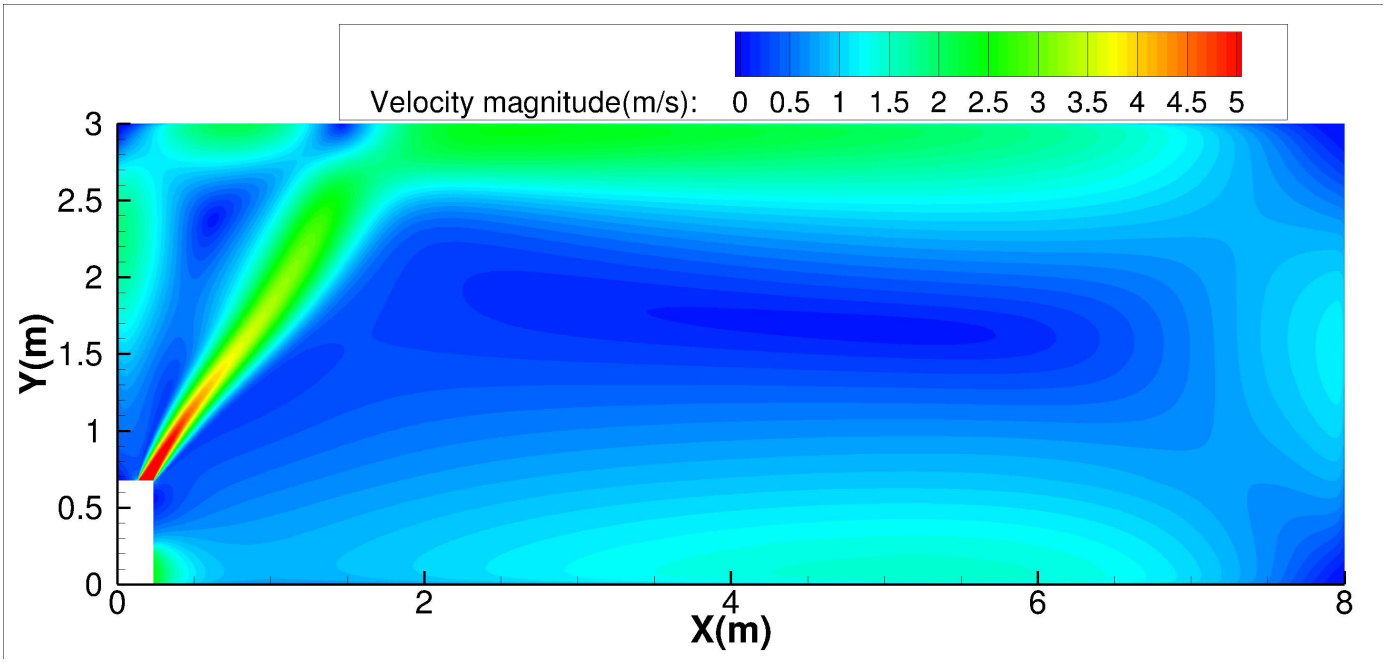

Heating temperature distributions

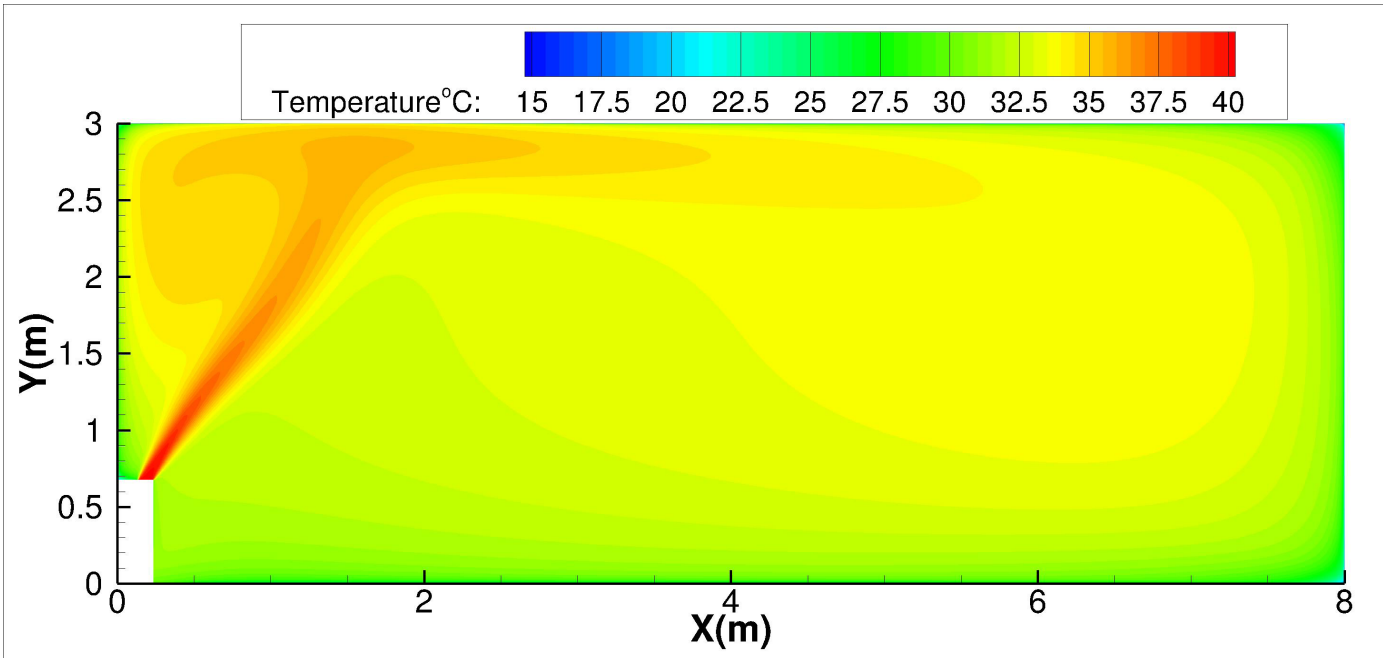

7. Capacity Tables

7.1 Cooling

18k																		
INDOOR AIRFLOW (CMH)	OUTDOOR DB(℃)	ID WB (℃)	16.0				18.0				19.0				22.0			
		ID DB (℃)	23.0	25.0	27.0	29.0	23.0	25.0	27.0	29.0	23.0	25.0	27.0	29.0	23.0	25.0	27.0	29.0
723	-15	TC	5.50	5.50	5.56	5.62	5.78	5.90	5.90	5.96	5.93	5.93	5.93	5.93	6.28	6.28	6.28	6.28
		S/T	0.70	0.79	0.88	0.97	0.57	0.65	0.73	0.82	0.50	0.58	0.66	0.74	0.35	0.42	0.49	0.57
		PI	0.96	0.97	0.97	0.96	0.96	0.96	0.96	0.96	0.96	0.96	0.96	0.96	0.96	0.96	0.96	0.96
	-10	TC	5.46	5.47	5.53	5.59	5.75	5.87	5.87	5.93	5.90	5.90	5.90	5.90	6.25	6.25	6.25	6.25
		S/T	0.71	0.80	0.88	0.97	0.57	0.65	0.74	0.82	0.50	0.58	0.66	0.75	0.35	0.43	0.49	0.57
		PI	0.96	0.96	0.96	0.96	0.96	0.96	0.96	0.96	0.96	0.96	0.96	0.96	0.96	0.96	0.96	0.96
	-5	TC	5.43	5.43	5.49	5.55	5.73	5.85	5.85	5.91	5.88	5.88	5.88	5.88	6.24	6.24	6.24	6.24
		S/T	0.71	0.80	0.89	0.98	0.58	0.66	0.74	0.83	0.51	0.59	0.66	0.75	0.35	0.43	0.50	0.58
		PI	0.96	0.96	0.96	0.96	0.95	0.95	0.95	0.95	0.96	0.96	0.96	0.96	0.96	0.96	0.96	0.96
	0	TC	5.40	5.41	5.47	5.53	5.71	5.83	5.83	5.88	5.87	5.87	5.87	5.87	6.23	6.23	6.23	6.23
		S/T	0.72	0.80	0.89	0.98	0.58	0.66	0.74	0.83	0.51	0.59	0.67	0.75	0.35	0.43	0.50	0.58
		PI	0.96	0.96	0.96	0.96	0.96	0.96	0.96	0.96	0.96	0.96	0.96	0.96	0.97	0.97	0.97	0.97
	5	TC	5.38	5.38	5.44	5.50	5.68	5.80	5.80	5.86	5.85	5.85	5.85	5.85	6.23	6.23	6.23	6.23
		S/T	0.72	0.81	0.90	0.99	0.58	0.66	0.75	0.84	0.51	0.59	0.67	0.76	0.35	0.43	0.50	0.58
		PI	0.97	0.97	0.97	0.97	0.97	0.97	0.97	0.97	0.97	0.97	0.97	0.97	0.97	0.97	0.97	0.97
	10	TC	5.34	5.35	5.41	5.46	5.66	5.78	5.78	5.83	5.82	5.82	5.82	5.82	6.21	6.21	6.21	6.21
		S/T	0.72	0.81	0.90	0.99	0.58	0.67	0.75	0.84	0.51	0.59	0.67	0.76	0.36	0.44	0.50	0.58
		PI	0.99	0.99	0.99	0.99	0.98	0.98	0.98	0.98	0.98	0.98	0.98	0.98	0.99	0.99	0.99	0.99
	15	TC	5.30	5.30	5.36	5.42	5.62	5.74	5.74	5.80	5.79	5.79	5.79	5.79	6.19	6.19	6.19	6.19
		S/T	0.73	0.82	0.91	1.00	0.59	0.67	0.76	0.85	0.52	0.60	0.68	0.77	0.36	0.44	0.51	0.59
		PI	1.01	1.01	1.01	1.01	1.00	1.00	1.00	1.00	1.00	1.00	1.00	1.00	1.01	1.01	1.01	1.01
	20	TC	5.24	5.24	5.30	5.36	5.56	5.56	5.56	5.56	5.73	5.73	5.73	5.73	6.13	6.13	6.13	6.13
		S/T	0.73	0.82	0.91	1.00	0.59	0.67	0.76	0.85	0.52	0.60	0.68	0.77	0.36	0.44	0.51	0.59
		PI	1.05	1.05	1.05	1.05	1.04	1.04	1.04	1.04	1.04	1.04	1.04	1.04	1.04	1.04	1.04	1.04
	25	TC	4.99	4.99	5.04	5.10	5.30	5.30	5.30	5.30	5.47	5.47	5.47	5.47	5.87	5.87	5.87	5.87
		S/T	0.74	0.84	0.93	1.00	0.59	0.68	0.77	0.86	0.52	0.61	0.69	0.78	0.35	0.44	0.52	0.60
		PI	1.16	1.16	1.16	1.16	1.16	1.16	1.16	1.16	1.16	1.16	1.16	1.16	1.16	1.16	1.16	1.16
	30	TC	4.76	4.76	4.81	4.87	5.07	5.07	5.07	5.07	5.22	5.22	5.22	5.22	5.62	5.62	5.62	5.62
		S/T	0.75	0.86	0.95	1.00	0.59	0.69	0.79	0.88	0.52	0.61	0.71	0.80	0.35	0.44	0.52	0.61
		PI	1.26	1.26	1.26	1.26	1.26	1.26	1.26	1.26	1.26	1.26	1.26	1.26	1.27	1.27	1.27	1.27
	35	TC	4.53	4.53	4.59	4.64	4.81	4.81	4.81	4.87	4.96	4.96	5.04	4.96	5.36	5.36	5.36	5.36
		S/T	0.77	0.87	0.97	1.00	0.60	0.70	0.80	0.90	0.52	0.62	0.71	0.82	0.35	0.44	0.53	0.62
		PI	1.38	1.38	1.38	1.38	1.39	1.39	1.39	1.39	1.39	1.39	1.39	1.39	1.40	1.40	1.40	1.40
	40	TC	4.23	4.24	4.28	4.33	4.50	4.50	4.50	4.54	4.64	4.64	4.68	4.64	5.01	5.01	5.01	5.01
		S/T	0.79	0.91	1.00	1.00	0.61	0.72	0.83	0.94	0.53	0.64	0.74	0.85	0.34	0.44	0.54	0.64
		PI	1.52	1.52	1.52	1.52	1.53	1.53	1.53	1.53	1.53	1.53	1.53	1.53	1.54	1.54	1.54	1.54
	46	TC	3.92	3.94	3.97	4.00	4.17	4.17	4.17	4.20	4.31	4.31	4.31	4.31	4.65	4.65	4.65	4.65
		S/T	0.81	0.92	1.00	1.00	0.62	0.74	0.85	0.96	0.53	0.65	0.76	0.87	0.34	0.44	0.55	0.65
		PI	1.69	1.69	1.69	1.69	1.70	1.70	1.70	1.70	1.70	1.70	1.70	1.70	1.72	1.72	1.72	1.72
	50	TC	3.66	3.69	3.72	3.75	3.92	3.92	3.92	3.94	4.06	4.06	4.06	4.09	4.40	4.40	4.40	4.40
		S/T	0.83	0.95	1.00	1.00	0.63	0.75	0.88	0.99	0.54	0.66	0.78	0.89	0.34	0.44	0.55	0.66
		PI	1.83	1.83	1.83	1.83	1.84	1.84	1.84	1.84	1.85	1.85	1.85	1.85	1.86	1.86	1.86	1.86

839	-15	TC	5.62	5.62	5.68	5.74	5.90	5.90	5.90	5.96	6.06	6.06	6.06	6.06	6.43	6.43	6.43	6.43
		S/T	0.73	0.84	0.98	1.00	0.58	0.68	0.77	0.86	0.50	0.60	0.70	0.78	0.34	0.42	0.51	0.60
		PI	0.98	0.98	0.98	0.98	0.99	0.99	0.99	0.99	0.98	0.98	0.98	0.98	0.98	0.98	0.98	0.98
	-10	TC	5.59	5.59	5.65	5.71	5.87	5.87	5.87	5.93	6.03	6.03	6.03	6.03	6.40	6.40	6.40	6.40
		S/T	0.74	0.84	0.99	1.00	0.58	0.68	0.78	0.86	0.50	0.60	0.70	0.79	0.34	0.43	0.51	0.60
		PI	0.98	0.98	0.98	0.98	0.98	0.98	0.98	0.98	0.98	0.98	0.98	0.98	0.98	0.98	0.98	0.98
	-5	TC	5.56	5.56	5.62	5.67	5.85	5.85	5.85	5.91	6.00	6.00	6.00	6.00	6.39	6.39	6.39	6.39
		S/T	0.74	0.85	0.99	1.00	0.59	0.68	0.78	0.87	0.51	0.60	0.70	0.79	0.34	0.43	0.52	0.60
		PI	0.98	0.98	0.98	0.98	0.98	0.98	0.98	0.98	0.98	0.98	0.98	0.98	0.98	0.98	0.98	0.98
	0	TC	5.53	5.53	5.59	5.65	5.83	5.83	5.83	5.88	5.99	5.99	5.99	5.99	6.38	6.38	6.38	6.38
		S/T	0.74	0.85	1.00	1.00	0.59	0.69	0.78	0.87	0.51	0.61	0.71	0.79	0.34	0.43	0.52	0.61
		PI	0.98	0.98	0.98	0.98	0.99	0.99	0.99	0.99	0.98	0.98	0.98	0.98	0.99	0.99	0.99	0.99
	5	TC	5.50	5.50	5.56	5.62	5.80	5.80	5.80	5.86	5.97	5.97	5.97	5.97	6.38	6.38	6.38	6.38
		S/T	0.75	0.86	1.00	1.00	0.59	0.69	0.79	0.88	0.51	0.61	0.71	0.80	0.34	0.43	0.52	0.61
		PI	0.99	0.99	0.99	0.99	0.99	0.99	0.99	0.99	0.99	0.99	0.99	0.99	0.99	0.99	0.99	0.99
	10	TC	5.47	5.47	5.53	5.58	5.78	5.78	5.78	5.83	5.94	5.94	5.94	5.94	6.36	6.36	6.36	6.36
		S/T	0.75	0.86	1.00	1.00	0.59	0.69	0.79	0.88	0.51	0.61	0.71	0.80	0.35	0.44	0.52	0.61
		PI	1.01	1.01	1.01	1.01	1.01	1.01	1.01	1.01	1.00	1.00	1.00	1.00	1.01	1.01	1.01	1.01
	15	TC	5.42	5.42	5.48	5.54	5.74	5.74	5.74	5.80	5.91	5.91	5.91	5.91	6.33	6.33	6.33	6.33
		S/T	0.76	0.87	0.97	1.00	0.60	0.70	0.80	0.89	0.52	0.62	0.72	0.81	0.35	0.44	0.53	0.62
		PI	1.03	1.03	1.03	1.03	1.03	1.03	1.03	1.03	1.02	1.02	1.02	1.02	1.03	1.03	1.03	1.03
	20	TC	5.36	5.36	5.42	5.48	5.68	5.68	5.68	5.73	5.85	5.85	5.85	5.85	6.28	6.28	6.28	6.28
		S/T	0.76	0.87	0.97	1.00	0.60	0.70	0.80	0.89	0.52	0.62	0.72	0.81	0.35	0.44	0.53	0.62
		PI	1.07	1.07	1.07	1.07	1.07	1.07	1.07	1.07	1.06	1.06	1.06	1.06	1.06	1.06	1.06	1.06
	25	TC	5.10	5.10	5.16	5.22	5.42	5.42	5.42	5.48	5.59	5.59	5.59	5.59	6.02	6.02	6.02	6.02
		S/T	0.77	0.88	0.99	1.00	0.61	0.71	0.81	0.91	0.53	0.63	0.73	0.83	0.35	0.44	0.53	0.63
		PI	1.18	1.18	1.18	1.18	1.18	1.18	1.18	1.18	1.18	1.18	1.18	1.18	1.18	1.18	1.18	1.18
	30	TC	4.87	4.93	4.99	5.05	5.19	5.19	5.19	5.25	5.33	5.33	5.33	5.33	5.76	5.76	5.76	5.76
		S/T	0.79	0.90	1.00	1.00	0.61	0.72	0.83	0.93	0.53	0.64	0.74	0.85	0.34	0.44	0.54	0.64
		PI	1.29	1.29	1.29	1.29	1.29	1.29	1.29	1.29	1.29	1.29	1.29	1.29	1.30	1.30	1.30	1.30
	35	TC	4.62	4.67	4.73	4.79	4.93	4.93	4.93	4.99	5.07	5.07	5.16	5.07	5.48	5.48	5.48	5.48
		S/T	0.80	0.92	1.00	1.00	0.62	0.73	0.85	0.96	0.53	0.64	0.75	0.87	0.34	0.44	0.54	0.65
		PI	1.41	1.41	1.41	1.41	1.41	1.41	1.41	1.41	1.42	1.42	1.42	1.42	1.42	1.42	1.42	1.42
	40	TC	4.34	4.39	4.43	4.47	4.63	4.63	4.66	4.71	4.77	4.77	4.82	4.80	5.16	5.16	5.16	5.16
		S/T	0.83	0.96	1.00	1.00	0.63	0.76	0.88	1.00	0.54	0.66	0.79	0.90	0.33	0.45	0.56	0.67
		PI	1.56	1.56	1.56	1.56	1.56	1.56	1.56	1.56	1.56	1.56	1.56	1.56	1.57	1.57	1.57	1.57
	46	TC	4.03	4.06	4.09	4.12	4.29	4.29	4.34	4.40	4.43	4.43	4.43	4.49	4.80	4.80	4.80	4.80
		S/T	0.85	0.98	1.00	1.00	0.64	0.77	0.90	1.00	0.55	0.67	0.80	0.92	0.33	0.45	0.57	0.68
		PI	1.73	1.73	1.73	1.73	1.74	1.74	1.74	1.74	1.74	1.74	1.74	1.74	1.75	1.75	1.75	1.75
	50	TC	3.77	3.80	3.83	3.86	4.03	4.03	4.06	4.09	4.17	4.17	4.17	4.20	4.52	4.52	4.52	4.52
		S/T	0.87	1.00	1.00	1.00	0.66	0.80	0.93	1.00	0.56	0.69	0.82	0.96	0.33	0.45	0.58	0.91
		PI	1.87	1.87	1.87	1.87	1.88	1.88	1.88	1.88	1.89	1.89	1.89	1.89	1.90	1.90	1.90	1.90
958	-15	TC	5.74	5.80	5.86	5.92	6.05	6.05	6.05	6.11	6.20	6.20	6.20	6.20	6.57	6.57	6.57	6.57
		S/T	0.76	0.87	1.00	1.00	0.59	0.70	0.80	0.98	0.51	0.62	0.72	0.82	0.33	0.42	0.52	0.62
		PI	1.00	1.00	1.00	1.00	1.00	1.00	1.00	1.00	1.00	1.00	1.00	1.00	1.00	1.00	1.00	1.00
	-10	TC	5.71	5.77	5.83	5.89	6.02	6.02	6.02	6.08	6.17	6.17	6.17	6.17	6.55	6.55	6.55	6.55
		S/T	0.77	0.87	1.00	1.00	0.59	0.70	0.81	0.98	0.51	0.62	0.73	0.82	0.33	0.43	0.52	0.62
		PI	1.00	1.00	1.00	1.00	1.00	1.00	1.00	1.00	1.00	1.00	1.00	1.00	1.00	1.00	1.00	1.00
	-5	TC	5.67	5.73	5.79	5.85	6.00	6.00	6.00	6.06	6.15	6.15	6.15	6.15	6.53	6.53	6.53	6.53
		S/T	0.77	0.88	1.00	1.00	0.59	0.70	0.81	0.99	0.52	0.62	0.73	0.83	0.33	0.43	0.53	0.62
		PI	1.00	1.00	1.00	1.00	1.00	1.00	1.00	1.00	1.00	1.00	1.00	1.00	1.00	1.00	1.00	1.00
	0	TC	5.65	5.71	5.76	5.82	5.97	5.97	5.97	6.03	6.13	6.13	6.13	6.13	6.53	6.53	6.53	6.53
		S/T	0.77	0.88	1.00	1.00	0.60	0.71	0.81	0.99	0.52	0.63	0.74	0.83	0.33	0.43	0.53	0.63
		PI	1.00	1.00	1.00	1.00	1.00	1.00	1.00	1.00	1.01	1.01	1.01	1.01	1.00	1.00	1.00	1.00
	5	TC	5.62	5.68	5.74	5.79	5.95	5.95	5.95	6.01	6.11	6.11	6.11	6.11	6.52	6.52	6.52	6.52
		S/T	0.78	0.89	1.00	1.00	0.60	0.71	0.82	1.00	0.52	0.63	0.74	0.84	0.33	0.43	0.53	0.63
		PI	1.01	1.01	1.01	1.01	1.01	1.01	1.01	1.01	1.01	1.01	1.01	1.01	1.01	1.01	1.01	1.01
	10	TC	5.58	5.64	5.70	5.76	5.92	5.92	5.92	5.98	6.09	6.09	6.09	6.09	6.51	6.51	6.51	6.51
		S/T	0.78	0.89	1.00	1.00	0.60	0.71	0.82	1.00	0.52	0.63	0.74	0.84	0.34	0.44	0.53	0.63
		PI	1.03	1.03	1.03	1.03	1.03	1.03	1.03	1.03	1.03	1.03	1.03	1.03	1.02	1.02	1.02	1.02
	15	TC	5.54	5.60	5.65	5.71	5.88	5.88	5.88	5.94	6.05	6.05	6.05	6.05	6.48	6.48	6.48	6.48
		S/T	0.79	0.90	1.00	1.00	0.61	0.72	0.83	0.94	0.53	0.64	0.75	0.85	0.34	0.44	0.54	0.64
		PI	1.05	1.05	1.05	1.05	1.05	1.05	1.05	1.05	1.05	1.05	1.05	1.05	1.05	1.05	1.05	1.05
	20	TC	5.48	5.53	5.59	5.65	5.82	5.82	5.82	5.88	5.99	5.99	5.99	5.99	6.42	6.42	6.42	6.42
		S/T	0.79	0.90	1.00	1.00	0.61	0.72	0.83	0.94	0.53	0.64	0.75	0.85	0.34	0.44	0.54	0.64
		PI	1.09	1.09	1.09	1.09	1.09	1.09	1.09	1.09	1.09	1.09	1.09	1.09	1.08	1.08	1.08	1.08
	25	TC	5.22	5.28	5.33	5.39	5.56	5.56	5.56	5.62	5.73	5.73	5.73	5.73	6.16	6.16	6.16	6.16
		S/T	0.81	0.92	1.00	1.00	0.62	0.74	0.85	0.96	0.54	0.65	0.76	0.87	0.34	0.44	0.55	0.65
		PI	1.21	1.21	1.21	1.21	1.21	1.21	1.21	1.21	1.21	1.21	1.21	1.21	1.21	1.21	1.21	1.21
	30	TC	4.99	5.05	5.10	5.16	5.30	5.30	5.30	5.36	5.45	5.45	5.45	5.50	5.88	5.88	5.88	5.88
		S/T	0.82	0.94	1.00	1.00	0.63	0.75	0.87	0.99	0.54	0.66	0.78	0.89	0.34	0.44	0.55	0.66
		PI	1.31	1.31	1.31	1.31	1.32	1.32	1.32	1.32	1.32	1.32	1.32	1.32	1.32	1.32	1.32	1.32
	35	TC	4.73	4.79	4.85	4.90	5.05	5.05	5.10	5.16	5.19	5.19	**5.28**	5.33	5.59	5.59	5.59	5.59
		S/T	0.84	0.97	1.00	1.00	0.64	0.77	0.89	1.00	0.55	0.67	**0.79**	0.90	0.33	0.45	0.56	0.68
		PI	1.44	1.44	1.44	1.44	1.44	1.44	1.44	1.44	1.45	1.45	**1.45**	1.45	1.46	1.46	1.46	1.46
	40	TC	4.44	4.49	4.53	4.58	4.74	4.74	4.80	4.86	4.89	4.89	4.93	4.99	5.27	5.27	5.27	5.27
		S/T	0.88	1.00	1.00	1.00	0.66	0.80	0.93	1.00	0.56	0.69	0.83	0.96	0.33	0.45	0.58	0.90
		PI	1.58	1.58	1.58	1.58	1.59	1.59	1.59	1.59	1.60	1.60	1.60	1.60	1.61	1.61	1.61	1.61
	46	TC	4.12	4.14	4.17	4.20	4.40	4.40	4.46	4.52	4.54	4.54	4.54	4.60	4.92	4.92	4.92	4.92
		S/T	0.89	1.00	1.00	1.00	0.67	0.81	0.95	1.00	0.56	0.70	0.84	0.98	0.33	0.46	0.59	0.92
		PI	1.76	1.76	1.76	1.76	1.77	1.77	1.77	1.77	1.78	1.78	1.78	1.78	1.79	1.79	1.79	1.79
	50	TC	3.86	3.89	3.92	3.94	4.12	4.12	4.14	4.17	4.26	4.26	4.26	4.29	4.63	4.63	4.63	4.63
		S/T	0.92	1.00	1.00	1.00	0.68	0.84	0.99	1.00	0.57	0.72	0.87	1.00	0.32	0.46	0.60	0.97
		PI	1.91	1.91	1.91	1.91	1.92	1.92	1.92	1.92	1.93	1.93	1.93	1.93	1.94	1.94	1.94	1.94

TC:Total Cooling Capacity (kW)

S/T:Sensible Cooling Capacity Ratio

PI:Power Input(kW)

Note: The table shows the case where the operation frequency of a compressor is fixed.

24k																		
INDOOR AIRFLOW (CMH)	OUTDOOR DB(℃)	ID WB (℃)	16.0				18.0				19.0				22.0			
		ID DB (℃)	23.0	25.0	27.0	29.0	23.0	25.0	27.0	29.0	23.0	25.0	27.0	29.0	23.0	25.0	27.0	29.0
853	-15	TC	7.35	7.34	7.34	7.40	7.73	7.88	7.88	7.88	7.93	7.93	7.93	7.93	8.40	8.40	8.40	8.40
		S/T	0.69	0.76	0.84	0.92	0.56	0.63	0.70	0.78	0.49	0.57	0.64	0.71	0.36	0.42	0.49	0.56
		PI	1.53	1.52	1.52	1.53	1.53	1.53	1.53	1.53	1.52	1.52	1.52	1.52	1.52	1.52	1.52	1.52
	-10	TC	7.31	7.30	7.30	7.36	7.69	7.84	7.84	7.84	7.89	7.89	7.89	7.89	8.37	8.37	8.37	8.37
		S/T	0.69	0.77	0.84	0.92	0.56	0.63	0.71	0.79	0.49	0.57	0.64	0.72	0.36	0.43	0.49	0.56
		PI	1.52	1.52	1.52	1.52	1.52	1.52	1.52	1.52	1.51	1.51	1.51	1.51	1.52	1.52	1.52	1.52
	-5	TC	7.26	7.26	7.26	7.32	7.66	7.81	7.81	7.81	7.86	7.86	7.86	7.86	8.35	8.35	8.35	8.35
		S/T	0.69	0.77	0.85	0.93	0.57	0.64	0.71	0.79	0.50	0.58	0.64	0.72	0.36	0.43	0.50	0.57
		PI	1.52	1.51	1.51	1.52	1.52	1.52	1.52	1.52	1.51	1.51	1.51	1.51	1.53	1.53	1.53	1.53
	0	TC	7.23	7.22	7.22	7.28	7.63	7.78	7.78	7.78	7.84	7.84	7.84	7.84	8.34	8.34	8.34	8.34
		S/T	0.70	0.77	0.85	0.93	0.57	0.64	0.72	0.79	0.50	0.58	0.65	0.73	0.36	0.43	0.50	0.57
		PI	1.52	1.52	1.52	1.52	1.53	1.53	1.53	1.53	1.52	1.52	1.52	1.52	1.53	1.53	1.53	1.53
	5	TC	7.19	7.18	7.18	7.24	7.60	7.75	7.75	7.75	7.82	7.82	7.82	7.82	8.34	8.34	8.34	8.34
		S/T	0.70	0.78	0.86	0.94	0.57	0.64	0.72	0.80	0.50	0.58	0.65	0.73	0.36	0.43	0.50	0.57
		PI	1.54	1.53	1.53	1.54	1.54	1.54	1.54	1.54	1.53	1.53	1.53	1.53	1.54	1.54	1.54	1.54
	10	TC	7.15	7.14	7.14	7.20	7.56	7.71	7.71	7.71	7.79	7.79	7.79	7.79	8.31	8.31	8.31	8.31
		S/T	0.70	0.78	0.86	0.94	0.57	0.65	0.72	0.80	0.50	0.58	0.65	0.73	0.37	0.44	0.50	0.57
		PI	1.56	1.56	1.56	1.56	1.56	1.56	1.56	1.56	1.56	1.56	1.56	1.56	1.56	1.56	1.56	1.56
	15	TC	7.09	7.08	7.08	7.14	7.51	7.66	7.66	7.66	7.74	7.74	7.74	7.74	8.28	8.28	8.28	8.28
		S/T	0.71	0.79	0.87	0.95	0.58	0.65	0.73	0.81	0.51	0.59	0.66	0.74	0.37	0.44	0.51	0.58
		PI	1.60	1.60	1.60	1.60	1.60	1.60	1.60	1.60	1.59	1.59	1.59	1.59	1.60	1.60	1.60	1.60
	20	TC	7.01	7.00	7.00	7.06	7.43	7.43	7.43	7.43	7.66	7.66	7.66	7.66	8.21	8.21	8.21	8.21
		S/T	0.71	0.79	0.87	0.95	0.58	0.65	0.73	0.81	0.51	0.59	0.66	0.74	0.37	0.44	0.51	0.58
		PI	1.66	1.65	1.65	1.66	1.65	1.65	1.65	1.65	1.64	1.64	1.64	1.64	1.64	1.64	1.64	1.64
	25	TC	6.69	6.69	6.74	6.80	7.09	7.09	7.09	7.09	7.32	7.32	7.32	7.32	7.86	7.86	7.86	7.86
		S/T	0.72	0.80	0.89	0.97	0.58	0.66	0.74	0.82	0.51	0.59	0.67	0.75	0.36	0.44	0.51	0.58
		PI	1.83	1.83	1.83	1.83	1.82	1.82	1.82	1.82	1.82	1.82	1.82	1.82	1.83	1.83	1.83	1.83
	30	TC	6.37	6.37	6.43	6.49	6.77	6.77	6.77	6.77	6.97	6.97	6.97	6.97	7.52	7.52	7.52	7.52
		S/T	0.73	0.82	0.90	0.99	0.58	0.67	0.75	0.84	0.52	0.60	0.68	0.76	0.36	0.44	0.51	0.59
		PI	2.00	2.00	2.00	2.00	2.01	2.01	2.01	2.01	2.01	2.01	2.01	2.01	2.02	2.02	2.02	2.02
	35	TC	6.06	6.06	6.11	6.17	6.43	6.43	6.43	6.43	6.63	6.63	6.74	6.63	7.17	7.17	7.17	7.17
		S/T	0.74	0.83	0.92	1.00	0.59	0.68	0.76	0.85	0.52	0.60	0.69	0.78	0.36	0.44	0.52	0.60
		PI	2.18	2.18	2.18	2.18	2.19	2.19	2.19	2.19	2.20	2.20	2.20	2.20	2.21	2.21	2.21	2.21
	40	TC	5.71	5.71	5.77	5.83	6.07	6.07	6.07	6.10	6.27	6.27	6.34	6.27	6.78	6.78	6.78	6.78
		S/T	0.76	0.86	0.96	1.00	0.60	0.69	0.79	0.89	0.52	0.62	0.71	0.81	0.35	0.44	0.52	0.61
		PI	2.41	2.41	2.41	2.41	2.42	2.42	2.42	2.42	2.43	2.43	2.43	2.43	2.44	2.44	2.44	2.44
	46	TC	5.29	5.29	5.35	5.40	5.63	5.63	5.63	5.69	5.83	5.83	5.83	5.83	6.29	6.29	6.29	6.29
		S/T	0.77	0.88	0.98	1.00	0.60	0.70	0.81	0.90	0.52	0.62	0.72	0.82	0.35	0.44	0.53	0.62
		PI	2.68	2.68	2.68	2.68	2.69	2.69	2.69	2.69	2.70	2.70	2.70	2.70	2.72	2.72	2.72	2.72
	50	TC	4.94	5.00	5.06	5.12	5.29	5.29	5.29	5.35	5.49	5.49	5.49	5.49	5.95	5.95	5.95	5.95
		S/T	0.79	0.90	1.00	1.00	0.61	0.72	0.83	0.93	0.53	0.63	0.74	0.84	0.34	0.44	0.54	0.63
		PI	2.91	2.91	2.91	2.91	2.92	2.92	2.92	2.92	2.93	2.93	2.93	2.93	2.95	2.95	2.95	2.95
1023	-15	TC	7.50	7.50	7.56	7.65	7.88	7.88	7.88	7.88	8.09	8.09	8.09	8.09	8.58	8.58	8.58	8.58
		S/T	0.71	0.81	0.98	1.00	0.57	0.66	0.74	0.83	0.50	0.59	0.67	0.75	0.34	0.42	0.50	0.58
		PI	1.56	1.56	1.56	1.56	1.55	1.55	1.55	1.55	1.55	1.55	1.55	1.55	1.55	1.55	1.55	1.55
	-10	TC	7.45	7.45	7.51	7.60	7.84	7.84	7.84	7.84	8.05	8.05	8.05	8.05	8.55	8.55	8.55	8.55
		S/T	0.72	0.82	0.99	1.00	0.57	0.66	0.75	0.83	0.50	0.59	0.67	0.76	0.34	0.43	0.50	0.58
		PI	1.55	1.55	1.55	1.55	1.55	1.55	1.55	1.55	1.55	1.55	1.55	1.55	1.55	1.55	1.55	1.55
	-5	TC	7.41	7.41	7.47	7.56	7.81	7.81	7.81	7.81	8.02	8.02	8.02	8.02	8.53	8.53	8.53	8.53
		S/T	0.72	0.82	0.99	1.00	0.58	0.66	0.75	0.84	0.51	0.59	0.67	0.76	0.34	0.43	0.51	0.59
		PI	1.55	1.55	1.55	1.55	1.55	1.55	1.55	1.55	1.55	1.55	1.55	1.55	1.55	1.55	1.55	1.55
	0	TC	7.37	7.37	7.43	7.52	7.78	7.78	7.78	7.78	7.99	7.99	7.99	7.99	8.52	8.52	8.52	8.52
		S/T	0.73	0.82	1.00	1.00	0.58	0.67	0.75	0.84	0.51	0.60	0.68	0.76	0.34	0.43	0.51	0.59
		PI	1.56	1.56	1.56	1.56	1.55	1.55	1.55	1.55	1.56	1.56	1.56	1.56	1.56	1.56	1.56	1.56
	5	TC	7.33	7.33	7.39	7.48	7.75	7.75	7.75	7.75	7.97	7.97	7.97	7.97	8.51	8.51	8.51	8.51
		S/T	0.73	0.83	1.00	1.00	0.58	0.67	0.76	0.85	0.51	0.60	0.68	0.77	0.34	0.43	0.51	0.59
		PI	1.57	1.57	1.57	1.57	1.57	1.57	1.57	1.57	1.57	1.57	1.57	1.57	1.57	1.57	1.57	1.57
	10	TC	7.29	7.29	7.35	7.44	7.71	7.71	7.71	7.71	7.93	7.93	7.93	7.93	8.49	8.49	8.49	8.49
		S/T	0.73	0.83	1.00	1.00	0.58	0.67	0.76	0.85	0.51	0.60	0.68	0.77	0.35	0.44	0.51	0.59
		PI	1.60	1.60	1.60	1.60	1.59	1.59	1.59	1.59	1.59	1.59	1.59	1.59	1.59	1.59	1.59	1.59
	15	TC	7.23	7.23	7.29	7.38	7.66	7.66	7.66	7.66	7.89	7.89	7.89	7.89	8.46	8.46	8.46	8.46
		S/T	0.74	0.84	0.93	1.00	0.59	0.68	0.77	0.86	0.52	0.61	0.69	0.78	0.35	0.44	0.52	0.60
		PI	1.64	1.64	1.64	1.64	1.63	1.63	1.63	1.63	1.63	1.63	1.63	1.63	1.62	1.62	1.62	1.62
	20	TC	7.15	7.15	7.21	7.29	7.58	7.58	7.58	7.58	7.81	7.81	7.81	7.81	8.38	8.38	8.38	8.38
		S/T	0.74	0.84	0.93	1.00	0.59	0.68	0.77	0.86	0.52	0.61	0.69	0.78	0.35	0.44	0.52	0.60
		PI	1.69	1.69	1.69	1.69	1.68	1.68	1.68	1.68	1.68	1.68	1.68	1.68	1.67	1.67	1.67	1.67
	25	TC	6.83	6.83	6.89	6.95	7.26	7.26	7.26	7.26	7.46	7.46	7.46	7.46	8.04	8.04	8.04	8.04
		S/T	0.75	0.85	0.95	1.00	0.59	0.69	0.78	0.88	0.52	0.61	0.70	0.80	0.35	0.44	0.52	0.61
		PI	1.87	1.87	1.87	1.87	1.87	1.87	1.87	1.87	1.87	1.87	1.87	1.87	1.87	1.87	1.87	1.87
	30	TC	6.52	6.52	6.57	6.63	6.92	6.92	6.92	6.98	7.12	7.12	7.12	7.12	7.69	7.69	7.69	7.69
		S/T	0.76	0.87	0.97	1.00	0.60	0.70	0.80	0.89	0.52	0.62	0.72	0.81	0.35	0.44	0.53	0.62
		PI	2.05	2.05	2.05	2.05	2.05	2.05	2.05	2.05	2.06	2.06	2.06	2.06	2.06	2.06	2.06	2.06
	35	TC	6.17	6.23	6.29	6.34	6.57	6.57	6.57	6.63	6.78	6.78	6.89	6.78	7.32	7.32	7.32	7.32
		S/T	0.78	0.88	0.99	1.00	0.61	0.71	0.81	0.92	0.53	0.63	0.72	0.83	0.35	0.44	0.53	0.63
		PI	2.23	2.23	2.23	2.23	2.24	2.24	2.24	2.24	2.25	2.25	2.25	2.25	2.25	2.25	2.25	2.25
	40	TC	5.77	5.83	5.89	5.95	6.15	6.15	6.15	6.20	6.35	6.35	6.41	6.35	6.86	6.86	6.86	6.86
		S/T	0.80	0.92	1.00	1.00	0.62	0.73	0.85	0.96	0.53	0.64	0.76	0.87	0.34	0.44	0.54	0.65
		PI	2.46	2.46	2.46	2.46	2.48	2.48	2.48	2.48	2.48	2.48	2.48	2.48	2.50	2.50	2.50	2.50
	46	TC	5.35	5.41	5.47	5.53	5.70	5.70	5.70	5.75	5.90	5.90	5.90	5.90	6.38	6.38	6.38	6.38
		S/T	0.82	0.94	1.00	1.00	0.63	0.75	0.87	0.98	0.54	0.65	0.77	0.88	0.34	0.44	0.55	0.66
		PI	2.74	2.74	2.74	2.74	2.76	2.76	2.76	2.76	2.76	2.76	2.76	2.76	2.79	2.79	2.79	2.79
	50	TC	5.01	5.07	5.13	5.18	5.35	5.35	5.41	5.47	5.55	5.55	5.55	5.61	6.01	6.01	6.01	6.01
		S/T	0.84	0.97	1.00	1.00	0.64	0.77	0.89	1.00	0.54	0.67	0.79	0.91	0.33	0.45	0.56	0.91
		PI	2.98	2.98	2.98	2.98	2.99	2.99	2.99	2.99	3.00	3.00	3.00	3.00	3.02	3.02	3.02	3.02

1192	-15	TC	7.68	7.68	7.77	7.86	8.06	8.06	8.06	8.15	8.26	8.26	8.26	8.26	8.79	8.79	8.79	8.79
		S/T	0.74	0.85	1.00	1.00	0.58	0.69	0.78	0.98	0.51	0.61	0.70	0.80	0.34	0.42	0.51	0.60
		PI	1.60	1.60	1.60	1.60	1.59	1.59	1.59	1.59	1.59	1.59	1.59	1.59	1.59	1.59	1.59	1.59
	-10	TC	7.63	7.63	7.72	7.81	8.02	8.02	8.02	8.10	8.22	8.22	8.22	8.22	8.76	8.76	8.76	8.76
		S/T	0.75	0.85	1.00	1.00	0.58	0.69	0.79	0.98	0.51	0.61	0.71	0.81	0.34	0.43	0.51	0.60
		PI	1.59	1.59	1.59	1.59	1.59	1.59	1.59	1.59	1.59	1.59	1.59	1.59	1.59	1.59	1.59	1.59
	-5	TC	7.59	7.59	7.68	7.77	7.99	7.99	7.99	8.07	8.19	8.19	8.19	8.19	8.73	8.73	8.73	8.73
		S/T	0.75	0.86	1.00	1.00	0.59	0.69	0.79	0.99	0.52	0.61	0.71	0.81	0.34	0.43	0.52	0.60
		PI	1.59	1.59	1.59	1.59	1.58	1.58	1.58	1.58	1.59	1.59	1.59	1.59	1.59	1.59	1.59	1.59
	0	TC	7.55	7.55	7.64	7.73	7.96	7.96	7.96	8.04	8.17	8.17	8.17	8.17	8.73	8.73	8.73	8.73
		S/T	0.75	0.86	1.00	1.00	0.59	0.70	0.79	0.99	0.52	0.62	0.72	0.81	0.34	0.43	0.52	0.61
		PI	1.59	1.59	1.59	1.59	1.59	1.59	1.59	1.59	1.59	1.59	1.59	1.59	1.60	1.60	1.60	1.60
	5	TC	7.51	7.51	7.60	7.69	7.93	7.93	7.93	8.01	8.14	8.14	8.14	8.14	8.72	8.72	8.72	8.72
		S/T	0.76	0.87	1.00	1.00	0.59	0.70	0.80	1.00	0.52	0.62	0.72	0.82	0.34	0.43	0.52	0.61
		PI	1.61	1.61	1.61	1.61	1.60	1.60	1.60	1.60	1.61	1.61	1.61	1.61	1.61	1.61	1.61	1.61
	10	TC	7.47	7.47	7.55	7.64	7.89	7.89	7.89	7.98	8.11	8.11	8.11	8.11	8.70	8.70	8.70	8.70
		S/T	0.76	0.87	1.00	1.00	0.59	0.70	0.80	1.00	0.52	0.62	0.72	0.82	0.35	0.44	0.52	0.61
		PI	1.63	1.63	1.63	1.63	1.63	1.63	1.63	1.63	1.63	1.63	1.63	1.63	1.63	1.63	1.63	1.63
	15	TC	7.40	7.40	7.49	7.58	7.83	7.83	7.83	7.92	8.06	8.06	8.06	8.06	8.66	8.66	8.66	8.66
		S/T	0.77	0.88	0.98	1.00	0.60	0.71	0.81	0.91	0.53	0.63	0.73	0.83	0.35	0.44	0.53	0.62
		PI	1.67	1.67	1.67	1.67	1.67	1.67	1.67	1.67	1.67	1.67	1.67	1.67	1.66	1.66	1.66	1.66
	20	TC	7.32	7.32	7.41	7.49	7.75	7.75	7.75	7.84	7.98	7.98	7.98	7.98	8.58	8.58	8.58	8.58
		S/T	0.77	0.88	0.98	1.00	0.60	0.71	0.81	0.91	0.53	0.63	0.73	0.83	0.35	0.44	0.53	0.62
		PI	1.73	1.73	1.73	1.73	1.72	1.72	1.72	1.72	1.72	1.72	1.72	1.72	1.71	1.71	1.71	1.71
	25	TC	6.98	7.03	7.09	7.15	7.41	7.41	7.41	7.49	7.64	7.64	7.64	7.64	8.21	8.21	8.21	8.21
		S/T	0.79	0.90	1.00	1.00	0.61	0.72	0.83	0.93	0.53	0.63	0.74	0.84	0.34	0.44	0.54	0.63
		PI	1.91	1.91	1.91	1.91	1.91	1.91	1.91	1.91	1.91	1.91	1.91	1.91	1.91	1.91	1.91	1.91
	30	TC	6.63	6.69	6.75	6.80	7.06	7.06	7.06	7.12	7.29	7.29	7.29	7.29	7.84	7.84	7.84	7.84
		S/T	0.80	0.92	1.00	1.00	0.62	0.73	0.84	0.95	0.53	0.64	0.75	0.86	0.34	0.44	0.54	0.65
		PI	2.08	2.08	2.08	2.08	2.09	2.09	2.09	2.09	2.09	2.09	2.09	2.09	2.10	2.10	2.10	2.10
	35	TC	6.32	6.37	6.43	6.49	6.72	6.72	6.72	6.78	6.92	6.92	**7.03**	7.09	7.46	7.46	7.46	7.46
		S/T	0.82	0.94	1.00	1.00	0.63	0.75	0.86	0.98	0.54	0.65	**0.76**	0.87	0.34	0.44	0.55	0.66
		PI	2.28	2.28	2.28	2.28	2.29	2.29	2.29	2.29	2.30	2.30	**2.30**	2.30	2.31	2.31	2.31	2.31
	40	TC	5.90	5.96	6.02	6.07	6.29	6.29	6.32	6.37	6.48	6.48	6.54	6.60	7.00	7.00	7.00	7.00
		S/T	0.85	0.98	1.00	1.00	0.64	0.77	0.90	1.00	0.55	0.67	0.80	0.92	0.33	0.45	0.57	0.90
		PI	2.52	2.52	2.52	2.52	2.53	2.53	2.53	2.53	2.54	2.54	2.54	2.54	2.56	2.56	2.56	2.56
	46	TC	5.47	5.53	5.58	5.64	5.84	5.84	5.90	5.95	6.01	6.01	6.01	6.07	6.52	6.52	6.52	6.52
		S/T	0.86	1.00	1.00	1.00	0.65	0.79	0.92	1.00	0.55	0.69	0.82	0.95	0.33	0.45	0.57	0.92
		PI	2.80	2.80	2.80	2.80	2.82	2.82	2.82	2.82	2.82	2.82	2.82	2.82	2.85	2.85	2.85	2.85
	50	TC	5.13	5.18	5.24	5.30	5.47	5.47	5.53	5.58	5.67	5.67	5.67	5.73	6.12	6.12	6.12	6.12
		S/T	0.89	1.00	1.00	1.00	0.67	0.81	0.95	1.00	0.56	0.70	0.84	0.98	0.33	0.45	0.58	0.97
		PI	3.04	3.04	3.04	3.04	3.05	3.05	3.05	3.05	3.06	3.06	3.06	3.06	3.08	3.08	3.08	3.08

TC:Total Cooling Capacity (kW)

S/T:Sensible Cooling Capacity Ratio

PI:Power Input(kW)

Note: The table shows the case where the operation frequency of a compressor is fixed.

36k+MOD30U-36HFN8-QRD0W(GA)																		
INDOOR AIRFLOW (CMH)	OUTDOOR DB(℃)	ID WB (℃)	16.0				18.0				19.0				22.0			
		ID DB (℃)	23.0	25.0	27.0	29.0	23.0	25.0	27.0	29.0	23.0	25.0	27.0	29.0	23.0	25.0	27.0	29.0
1504	-15	TC	11.05	11.06	11.18	11.30	11.63	11.87	11.87	11.99	11.90	11.90	11.90	11.90	12.65	12.65	12.65	12.65
		S/T	0.71	0.81	0.90	0.97	0.57	0.66	0.74	0.83	0.50	0.59	0.67	0.75	0.35	0.42	0.50	0.58
		PI	2.60	2.59	2.59	2.60	2.58	2.58	2.58	2.58	2.59	2.59	2.59	2.59	2.58	2.58	2.58	2.58
	-10	TC	10.99	11.00	11.11	11.23	11.56	11.80	11.80	11.92	11.84	11.84	11.84	11.84	12.60	12.60	12.60	12.60
		S/T	0.72	0.82	0.90	0.97	0.57	0.66	0.75	0.83	0.50	0.59	0.67	0.76	0.35	0.43	0.50	0.58
		PI	2.58	2.58	2.58	2.58	2.58	2.58	2.58	2.58	2.58	2.58	2.58	2.58	2.58	2.58	2.58	2.58
	-5	TC	10.92	10.93	11.05	11.17	11.52	11.76	11.76	11.88	11.80	11.80	11.80	11.80	12.57	12.57	12.57	12.57
		S/T	0.72	0.82	0.91	0.98	0.58	0.66	0.75	0.84	0.51	0.59	0.67	0.76	0.35	0.43	0.51	0.59
		PI	2.58	2.57	2.57	2.58	2.57	2.57	2.57	2.57	2.58	2.58	2.58	2.58	2.58	2.58	2.58	2.58
	0	TC	10.87	10.87	10.99	11.11	11.47	11.71	11.71	11.83	11.77	11.77	11.77	11.77	12.56	12.56	12.56	12.56
		S/T	0.73	0.82	0.91	0.98	0.58	0.67	0.75	0.84	0.51	0.60	0.68	0.76	0.35	0.43	0.51	0.59
		PI	2.59	2.58	2.58	2.59	2.58	2.58	2.58	2.58	2.59	2.59	2.59	2.59	2.59	2.59	2.59	2.59
	5	TC	10.81	10.82	10.94	11.06	11.43	11.67	11.67	11.79	11.73	11.73	11.73	11.73	12.55	12.55	12.55	12.55
		S/T	0.73	0.83	0.92	0.99	0.58	0.67	0.76	0.85	0.51	0.60	0.68	0.77	0.35	0.43	0.51	0.59
		PI	2.61	2.61	2.61	2.61	2.61	2.61	2.61	2.61	2.61	2.61	2.61	2.61	2.61	2.61	2.61	2.61
	10	TC	10.75	10.75	10.87	10.99	11.38	11.61	11.61	11.73	11.68	11.68	11.68	11.68	12.52	12.52	12.52	12.52
		S/T	0.73	0.83	0.92	0.99	0.58	0.67	0.76	0.85	0.51	0.60	0.68	0.77	0.36	0.44	0.51	0.59
		PI	2.66	2.65	2.65	2.66	2.65	2.65	2.65	2.65	2.65	2.65	2.65	2.65	2.64	2.64	2.64	2.64
	15	TC	10.66	10.67	10.78	10.90	11.30	11.54	11.54	11.65	11.61	11.61	11.61	11.61	12.46	12.46	12.46	12.46
		S/T	0.74	0.84	0.93	1.00	0.59	0.68	0.77	0.86	0.52	0.61	0.69	0.78	0.36	0.44	0.52	0.60
		PI	2.72	2.72	2.72	2.72	2.71	2.71	2.71	2.71	2.71	2.71	2.71	2.71	2.70	2.70	2.70	2.70
	20	TC	10.54	10.55	10.66	10.78	11.18	11.18	11.18	11.18	11.50	11.50	11.50	11.50	12.36	12.36	12.36	12.36
		S/T	0.74	0.84	0.93	1.00	0.59	0.68	0.77	0.86	0.52	0.61	0.69	0.78	0.36	0.44	0.52	0.60
		PI	2.82	2.81	2.81	2.82	2.80	2.80	2.80	2.80	2.80	2.80	2.80	2.80	2.78	2.78	2.78	2.78
	25	TC	10.06	10.06	10.17	10.29	10.69	10.69	10.69	10.69	11.01	11.01	11.01	11.01	11.84	11.84	11.84	11.84
		S/T	0.75	0.85	0.95	1.00	0.59	0.69	0.78	0.88	0.52	0.61	0.70	0.80	0.35	0.44	0.52	0.61
		PI	3.10	3.10	3.10	3.10	3.10	3.10	3.10	3.10	3.10	3.10	3.10	3.10	3.10	3.10	3.10	3.10
	30	TC	9.57	9.57	9.66	9.74	10.20	10.20	10.20	10.32	10.49	10.49	10.49	10.49	11.32	11.32	11.32	11.32
		S/T	0.76	0.87	0.97	1.00	0.60	0.70	0.80	0.89	0.52	0.62	0.72	0.81	0.35	0.44	0.53	0.62
		PI	3.40	3.40	3.40	3.40	3.41	3.41	3.41	3.41	3.41	3.41	3.41	3.41	3.42	3.42	3.42	3.42
	35	TC	9.11	9.20	9.28	9.37	9.68	9.68	9.68	9.77	10.00	10.00	10.14	10.00	10.78	10.78	10.78	10.78
		S/T	0.78	0.88	0.99	1.00	0.61	0.71	0.81	0.91	0.53	0.63	0.72	0.83	0.35	0.44	0.53	0.63
		PI	3.71	3.71	3.71	3.71	3.73	3.73	3.73	3.73	3.73	3.73	3.74	3.73	3.76	3.76	3.76	3.76
	40	TC	8.58	8.66	8.75	8.84	9.14	9.14	9.14	9.23	9.43	9.43	9.51	9.47	10.18	10.18	10.18	10.18
		S/T	0.80	0.92	1.00	1.00	0.62	0.73	0.85	0.96	0.53	0.65	0.76	0.87	0.34	0.44	0.54	0.65
		PI	4.10	4.10	4.10	4.10	4.12	4.12	4.12	4.12	4.12	4.12	4.13	4.12	4.16	4.16	4.16	4.16
	46	TC	7.93	8.02	8.11	8.19	8.48	8.48	8.48	8.57	8.74	8.74	8.74	8.83	9.46	9.46	9.46	9.46
		S/T	0.82	0.94	1.00	1.00	0.63	0.75	0.86	0.98	0.54	0.65	0.77	0.88	0.34	0.44	0.55	0.66
		PI	4.56	4.56	4.56	4.56	4.58	4.58	4.58	4.58	4.59	4.59	4.59	4.59	4.63	4.63	4.63	4.63
	50	TC	7.45	7.53	7.62	7.70	7.96	7.96	8.05	8.14	8.22	8.22	8.22	8.31	8.91	8.91	8.91	8.91
		S/T	0.84	0.97	1.00	1.00	0.64	0.76	0.89	1.00	0.55	0.67	0.79	0.91	0.33	0.45	0.56	0.67
		PI	4.93	4.93	4.93	4.93	4.95	4.95	4.95	4.95	4.97	4.97	4.97	4.97	5.01	5.01	5.01	5.01
1728	-15	TC	11.28	11.28	11.40	11.52	11.87	11.87	11.87	11.99	12.15	12.15	12.15	12.15	12.92	12.92	12.92	12.92
		S/T	0.74	0.85	0.98	1.00	0.58	0.68	0.78	0.87	0.51	0.60	0.70	0.79	0.34	0.42	0.51	0.60
		PI	2.66	2.66	2.66	2.66	2.64	2.64	2.64	2.64	2.64	2.64	2.64	2.64	2.63	2.63	2.63	2.63
	-10	TC	11.21	11.21	11.33	11.45	11.80	11.80	11.80	11.92	12.08	12.08	12.08	12.08	12.87	12.87	12.87	12.87
		S/T	0.75	0.85	0.99	1.00	0.58	0.68	0.79	0.87	0.51	0.60	0.70	0.80	0.34	0.43	0.51	0.60
		PI	2.64	2.64	2.64	2.64	2.63	2.63	2.63	2.63	2.64	2.64	2.64	2.64	2.63	2.63	2.63	2.63
	-5	TC	11.14	11.14	11.26	11.38	11.76	11.76	11.76	11.88	12.04	12.04	12.04	12.04	12.84	12.84	12.84	12.84
		S/T	0.75	0.86	0.99	1.00	0.59	0.68	0.79	0.88	0.52	0.60	0.70	0.80	0.34	0.43	0.52	0.60
		PI	2.64	2.64	2.64	2.64	2.63	2.63	2.63	2.63	2.64	2.64	2.64	2.64	2.64	2.64	2.64	2.64
	0	TC	11.09	11.09	11.21	11.32	11.71	11.71	11.71	11.83	12.01	12.01	12.01	12.01	12.83	12.83	12.83	12.83
		S/T	0.75	0.86	1.00	1.00	0.59	0.69	0.79	0.88	0.52	0.61	0.71	0.80	0.34	0.43	0.52	0.61
		PI	2.65	2.65	2.65	2.65	2.64	2.64	2.64	2.64	2.65	2.65	2.65	2.65	2.65	2.65	2.65	2.65
	5	TC	11.03	11.03	11.15	11.27	11.67	11.67	11.67	11.79	11.97	11.97	11.97	11.97	12.82	12.82	12.82	12.82
		S/T	0.76	0.87	1.00	1.00	0.59	0.69	0.80	0.89	0.52	0.61	0.71	0.81	0.34	0.43	0.52	0.61
		PI	2.67	2.67	2.67	2.67	2.66	2.66	2.66	2.66	2.67	2.67	2.67	2.67	2.67	2.67	2.67	2.67
	10	TC	10.96	10.96	11.08	11.20	11.61	11.61	11.61	11.73	11.92	11.92	11.92	11.92	12.78	12.78	12.78	12.78
		S/T	0.76	0.87	1.00	1.00	0.59	0.69	0.80	0.89	0.52	0.61	0.71	0.81	0.35	0.44	0.52	0.61
		PI	2.72	2.72	2.72	2.72	2.70	2.70	2.70	2.70	2.71	2.71	2.71	2.71	2.70	2.70	2.70	2.70
	15	TC	10.87	10.87	10.99	11.11	11.54	11.54	11.54	11.65	11.85	11.85	11.85	11.85	12.73	12.73	12.73	12.73
		S/T	0.77	0.88	0.98	1.00	0.60	0.70	0.81	0.90	0.53	0.62	0.72	0.82	0.35	0.44	0.53	0.62
		PI	2.78	2.78	2.78	2.78	2.77	2.77	2.77	2.77	2.77	2.77	2.77	2.77	2.76	2.76	2.76	2.76
	20	TC	10.75	10.75	10.87	10.98	11.41	11.41	11.41	11.53	11.73	11.73	11.73	11.73	12.62	12.62	12.62	12.62
		S/T	0.77	0.88	0.98	1.00	0.60	0.70	0.81	0.90	0.53	0.62	0.72	0.82	0.35	0.44	0.53	0.62
		PI	2.88	2.88	2.88	2.88	2.86	2.86	2.86	2.86	2.86	2.86	2.86	2.86	2.84	2.84	2.84	2.84
	25	TC	10.26	10.38	10.49	10.61	10.90	10.90	10.90	11.01	11.21	11.21	11.21	11.21	12.07	12.07	12.07	12.07
		S/T	0.78	0.89	1.00	1.00	0.61	0.72	0.82	0.92	0.53	0.63	0.74	0.84	0.34	0.44	0.54	0.63
		PI	3.17	3.17	3.17	3.17	3.17	3.17	3.17	3.17	3.17	3.17	3.17	3.17	3.17	3.17	3.17	3.17
	30	TC	9.77	9.86	9.95	10.03	10.41	10.41	10.41	10.52	10.72	10.72	10.72	10.72	11.53	11.53	11.53	11.53
		S/T	0.80	0.91	1.00	1.00	0.62	0.73	0.84	0.95	0.53	0.64	0.75	0.86	0.34	0.44	0.54	0.64
		PI	3.47	3.47	3.47	3.47	3.48	3.48	3.48	3.48	3.48	3.48	3.48	3.48	3.50	3.50	3.50	3.50
	35	TC	9.29	9.37	9.46	9.54	9.89	9.89	9.89	9.98	10.18	10.18	10.35	10.18	10.98	10.98	10.98	10.98
		S/T	0.81	0.93	1.00	1.00	0.62	0.74	0.86	0.97	0.54	0.65	0.76	0.88	0.34	0.44	0.55	0.65
		PI	3.79	3.79	3.79	3.79	3.81	3.81	3.81	3.81	3.81	3.81	3.82	3.81	3.81	3.81	3.81	3.81
	40	TC	8.75	8.84	8.93	9.01	9.33	9.33	9.37	9.46	9.60	9.60	9.70	9.64	10.38	10.38	10.38	10.38
		S/T	0.84	0.98	1.00	1.00	0.64	0.77	0.89	1.00	0.55	0.67	0.80	0.92	0.33	0.45	0.56	0.68
		PI	4.18	4.18	4.18	4.18	4.20	4.20	4.20	4.20	4.21	4.21	4.22	4.21	4.23	4.23	4.23	4.23
	46	TC	8.11	8.20	8.28	8.37	8.66	8.66	8.74	8.83	8.91	8.91	8.91	9.00	9.66	9.66	9.66	9.66
		S/T	0.86	1.00	1.00	1.00	0.65	0.78	0.91	1.00	0.55	0.68	0.81	0.94	0.33	0.45	0.57	0.69
		PI	4.65	4.65	4.65	4.65	4.67	4.67	4.67	4.67	4.69	4.69	4.69	4.69	4.73	4.73	4.73	4.73
	50	TC	7.59	7.68	7.76	7.85	8.14	8.14	8.22	8.31	8.40	8.40	8.40	8.48	9.12	9.12	9.12	9.12
		S/T	0.89	1.00	1.00	1.00	0.66	0.80	0.94	1.00	0.56	0.70	0.84	0.97	0.33	0.45	0.58	0.91
		PI	5.04	5.04	5.04	5.04	5.06	5.06	5.06	5.06	5.07	5.07	5.07	5.07	5.11	5.11	5.11	5.11

1955	-15	TC	11.49	11.61	11.73	11.85	12.08	12.08	12.08	12.20	12.38	12.38	12.38	12.38	13.15	13.15	13.15	13.15
		S/T	0.77	0.88	1.00	1.00	0.60	0.70	0.81	0.98	0.51	0.62	0.72	0.83	0.33	0.42	0.52	0.63
		PI	2.71	2.71	2.71	2.71	2.69	2.69	2.69	2.69	2.70	2.70	2.70	2.70	2.69	2.69	2.69	2.69
	-10	TC	11.42	11.54	11.66	11.78	12.01	12.01	12.01	12.13	12.32	12.32	12.32	12.32	13.11	13.11	13.11	13.11
		S/T	0.78	0.88	1.00	1.00	0.60	0.71	0.82	0.98	0.51	0.62	0.73	0.83	0.33	0.43	0.52	0.63
		PI	2.70	2.70	2.70	2.70	2.69	2.69	2.69	2.69	2.69	2.69	2.69	2.69	2.69	2.69	2.69	2.69
	-5	TC	11.35	11.47	11.59	11.71	11.97	11.97	11.97	12.08	12.28	12.28	12.28	12.28	13.07	13.07	13.07	13.07
		S/T	0.78	0.89	1.00	1.00	0.60	0.71	0.82	0.99	0.52	0.62	0.73	0.84	0.33	0.43	0.53	0.63
		PI	2.69	2.69	2.69	2.69	2.68	2.68	2.68	2.68	2.69	2.69	2.69	2.69	2.69	2.69	2.69	2.69
	0	TC	11.29	11.41	11.53	11.65	11.92	11.92	11.92	12.04	12.24	12.24	12.24	12.24	13.06	13.06	13.06	13.06
		S/T	0.78	0.89	1.00	1.00	0.61	0.72	0.82	0.99	0.52	0.63	0.74	0.84	0.33	0.43	0.53	0.64
		PI	2.70	2.70	2.70	2.70	2.69	2.69	2.69	2.69	2.70	2.70	2.70	2.70	2.70	2.70	2.70	2.70
	5	TC	11.24	11.36	11.47	11.59	11.87	11.87	11.87	11.99	12.20	12.20	12.20	12.20	13.05	13.05	13.05	13.05
		S/T	0.79	0.90	1.00	1.00	0.61	0.72	0.83	1.00	0.52	0.63	0.74	0.85	0.33	0.43	0.53	0.64
		PI	2.73	2.73	2.73	2.73	2.72	2.72	2.72	2.72	2.72	2.72	2.72	2.72	2.72	2.72	2.72	2.72
	10	TC	11.17	11.29	11.40	11.52	11.82	11.82	11.82	11.94	12.15	12.15	12.15	12.15	13.02	13.02	13.02	13.02
		S/T	0.79	0.90	1.00	1.00	0.61	0.72	0.83	1.00	0.52	0.63	0.74	0.85	0.34	0.44	0.53	0.64
		PI	2.77	2.77	2.77	2.77	2.76	2.76	2.76	2.76	2.76	2.76	2.76	2.76	2.76	2.76	2.76	2.76
	15	TC	11.08	11.19	11.31	11.43	11.74	11.74	11.74	11.86	12.08	12.08	12.08	12.08	12.96	12.96	12.96	12.96
		S/T	0.80	0.91	1.00	1.00	0.62	0.73	0.84	0.95	0.53	0.64	0.75	0.86	0.34	0.44	0.54	0.65
		PI	2.84	2.84	2.84	2.84	2.82	2.82	2.82	2.82	2.83	2.83	2.83	2.83	2.82	2.82	2.82	2.82
	20	TC	10.95	11.07	11.18	11.30	11.61	11.61	11.61	11.73	11.96	11.96	11.96	11.96	12.85	12.85	12.85	12.85
		S/T	0.80	0.91	1.00	1.00	0.62	0.73	0.84	0.95	0.53	0.64	0.75	0.86	0.34	0.44	0.54	0.65
		PI	2.94	2.94	2.94	2.94	2.92	2.92	2.92	2.92	2.92	2.92	2.92	2.92	2.90	2.90	2.90	2.90
	25	TC	10.46	10.58	10.69	10.81	11.10	11.10	11.10	11.21	11.44	11.44	11.44	11.44	12.30	12.30	12.30	12.30
		S/T	0.81	0.93	1.00	1.00	0.63	0.74	0.86	0.98	0.54	0.65	0.77	0.88	0.34	0.44	0.55	0.66
		PI	3.23	3.23	3.23	3.23	3.23	3.23	3.23	3.23	3.23	3.23	3.23	3.23	3.23	3.23	3.23	3.23
	30	TC	9.98	10.06	10.18	10.29	10.61	10.61	10.61	10.72	10.92	10.92	10.92	11.04	11.76	11.76	11.76	11.76
		S/T	0.83	0.96	1.00	1.00	0.63	0.76	0.88	1.00	0.54	0.66	0.78	0.90	0.33	0.45	0.56	0.67
		PI	3.54	3.54	3.54	3.54	3.55	3.55	3.55	3.55	3.56	3.56	3.56	3.56	3.57	3.57	3.57	3.57
	35	TC	9.46	9.54	9.63	9.72	10.06	10.06	10.18	10.29	10.38	10.38	**10.55**	10.67	11.21	11.21	11.21	11.21
		S/T	0.85	0.98	1.00	1.00	0.64	0.77	0.90	1.00	0.55	0.67	**0.80**	0.91	0.33	0.45	0.57	0.68
		PI	3.87	3.87	3.87	3.87	3.89	3.89	3.89	3.89	3.89	3.89	**3.90**	3.89	3.92	3.92	3.92	3.92
	40	TC	8.91	9.00	9.08	9.17	9.49	9.49	9.59	9.69	9.79	9.79	9.89	9.99	10.60	10.60	10.60	10.60
		S/T	0.89	1.00	1.00	1.00	0.66	0.81	0.94	1.00	0.56	0.70	0.84	0.97	0.33	0.45	0.58	0.90
		PI	4.27	4.27	4.27	4.27	4.29	4.29	4.29	4.29	4.30	4.30	4.30	4.30	4.33	4.33	4.33	4.33
	46	TC	8.25	8.34	8.43	8.51	8.80	8.80	8.89	8.97	9.09	9.09	9.09	9.17	9.86	9.86	9.86	9.86
		S/T	0.90	1.00	1.00	1.00	0.67	0.82	0.97	1.00	0.57	0.71	0.85	0.99	0.32	0.46	0.59	0.92
		PI	4.75	4.75	4.75	4.75	4.77	4.77	4.77	4.77	4.79	4.79	4.79	4.79	4.83	4.83	4.83	4.83
	50	TC	7.74	7.82	7.91	7.99	8.28	8.28	8.37	8.45	8.57	8.57	8.57	8.66	9.29	9.29	9.29	9.29
		S/T	0.93	1.00	1.00	1.00	0.69	0.85	1.00	1.00	0.57	0.73	0.88	1.00	0.32	0.46	0.60	0.97
		PI	5.14	5.14	5.14	5.14	5.17	5.17	5.17	5.17	5.18	5.18	5.18	5.18	5.22	5.22	5.22	5.22

TC:Total Cooling Capacity (kW)

S/T:Sensible Cooling Capacity Ratio

PI:Power Input(kW)

Note: The table shows the case where the operation frequency of a compressor is fixed.

36k+MOD30U-36HFN8-RRD0W(GA)																		
INDOOR AIRFLOW (CMH)	OUTDOOR DB(℃)	ID WB (℃)	16.0				18.0				19.0				22.0			
		ID DB (℃)	23.0	25.0	27.0	29.0	23.0	25.0	27.0	29.0	23.0	25.0	27.0	29.0	23.0	25.0	27.0	29.0
1504	-15	TC	11.05	11.06	11.18	11.30	11.63	11.87	11.87	11.99	11.90	11.90	11.90	11.90	12.65	12.65	12.65	12.65
		S/T	0.71	0.81	0.90	0.97	0.57	0.66	0.74	0.83	0.50	0.59	0.67	0.75	0.35	0.42	0.50	0.58
		PI	2.66	2.66	2.66	2.66	2.66	2.66	2.66	2.66	2.65	2.65	2.65	2.65	2.65	2.65	2.65	2.65
	-10	TC	10.99	11.00	11.11	11.23	11.56	11.80	11.80	11.92	11.84	11.84	11.84	11.84	12.60	12.60	12.60	12.60
		S/T	0.72	0.82	0.90	0.97	0.57	0.66	0.75	0.83	0.50	0.59	0.67	0.76	0.35	0.43	0.50	0.58
		PI	2.65	2.65	2.65	2.65	2.65	2.65	2.65	2.65	2.65	2.65	2.65	2.65	2.65	2.65	2.65	2.65
	-5	TC	10.92	10.93	11.05	11.17	11.52	11.76	11.76	11.88	11.80	11.80	11.80	11.80	12.57	12.57	12.57	12.57
		S/T	0.72	0.82	0.91	0.98	0.58	0.66	0.75	0.84	0.51	0.59	0.67	0.76	0.35	0.43	0.51	0.59
		PI	2.65	2.65	2.65	2.65	2.65	2.65	2.65	2.65	2.65	2.65	2.65	2.65	2.66	2.66	2.66	2.66
	0	TC	10.87	10.87	10.99	11.11	11.47	11.71	11.71	11.83	11.77	11.77	11.77	11.77	12.56	12.56	12.56	12.56
		S/T	0.73	0.82	0.91	0.98	0.58	0.67	0.75	0.84	0.51	0.60	0.68	0.76	0.35	0.43	0.51	0.59
		PI	2.66	2.66	2.66	2.66	2.66	2.66	2.66	2.66	2.66	2.66	2.66	2.66	2.67	2.67	2.67	2.67
	5	TC	10.81	10.82	10.94	11.06	11.43	11.67	11.67	11.79	11.73	11.73	11.73	11.73	12.55	12.55	12.55	12.55
		S/T	0.73	0.83	0.92	0.99	0.58	0.67	0.76	0.85	0.51	0.60	0.68	0.77	0.35	0.43	0.51	0.59
		PI	2.68	2.68	2.68	2.68	2.68	2.68	2.68	2.68	2.68	2.68	2.68	2.68	2.69	2.69	2.69	2.69
	10	TC	10.75	10.75	10.87	10.99	11.38	11.61	11.61	11.73	11.68	11.68	11.68	11.68	12.52	12.52	12.52	12.52
		S/T	0.73	0.83	0.92	0.99	0.58	0.67	0.76	0.85	0.51	0.60	0.68	0.77	0.36	0.44	0.51	0.59
		PI	2.73	2.73	2.73	2.73	2.72	2.72	2.72	2.72	2.72	2.72	2.72	2.72	2.72	2.72	2.72	2.72
	15	TC	10.66	10.67	10.78	10.90	11.30	11.54	11.54	11.65	11.61	11.61	11.61	11.61	12.46	12.46	12.46	12.46
		S/T	0.74	0.84	0.93	1.00	0.59	0.68	0.77	0.86	0.52	0.61	0.69	0.78	0.36	0.44	0.52	0.60
		PI	2.79	2.79	2.79	2.79	2.79	2.79	2.79	2.79	2.78	2.78	2.78	2.78	2.78	2.78	2.78	2.78
	20	TC	10.54	10.55	10.66	10.78	11.18	11.18	11.18	11.18	11.50	11.50	11.50	11.50	12.36	12.36	12.36	12.36
		S/T	0.74	0.84	0.93	1.00	0.59	0.68	0.77	0.86	0.52	0.61	0.69	0.78	0.36	0.44	0.52	0.60
		PI	2.89	2.89	2.89	2.89	2.88	2.88	2.88	2.88	2.87	2.87	2.87	2.87	2.86	2.86	2.86	2.86
	25	TC	10.06	10.06	10.17	10.29	10.69	10.69	10.69	10.69	11.01	11.01	11.01	11.01	11.84	11.84	11.84	11.84
		S/T	0.75	0.85	0.95	1.00	0.59	0.69	0.78	0.88	0.52	0.61	0.70	0.80	0.35	0.44	0.52	0.61
		PI	3.19	3.19	3.19	3.19	3.19	3.19	3.19	3.19	3.19	3.19	3.19	3.19	3.19	3.19	3.19	3.19
	30	TC	9.57	9.57	9.66	9.74	10.20	10.20	10.20	10.32	10.49	10.49	10.49	10.49	11.32	11.32	11.32	11.32
		S/T	0.76	0.87	0.97	1.00	0.60	0.70	0.80	0.89	0.52	0.62	0.72	0.81	0.35	0.44	0.53	0.62
		PI	3.49	3.49	3.49	3.49	3.50	3.50	3.50	3.50	3.50	3.50	3.50	3.50	3.52	3.52	3.52	3.52
	35	TC	9.11	9.20	9.28	9.37	9.68	9.68	9.68	9.77	10.00	10.00	10.14	10.00	10.78	10.78	10.78	10.78
		S/T	0.78	0.88	0.99	1.00	0.61	0.71	0.81	0.91	0.53	0.63	0.72	0.83	0.35	0.44	0.53	0.63
		PI	3.81	3.81	3.81	3.81	3.83	3.83	3.83	3.83	3.83	3.83	3.84	3.83	3.86	3.86	3.86	3.86
	40	TC	8.58	8.66	8.75	8.84	9.14	9.14	9.14	9.23	9.43	9.43	9.51	9.47	10.18	10.18	10.18	10.18
		S/T	0.80	0.92	1.00	1.00	0.62	0.73	0.85	0.96	0.53	0.65	0.76	0.87	0.34	0.44	0.54	0.65
		PI	4.21	4.21	4.21	4.21	4.23	4.23	4.23	4.23	4.23	4.23	4.24	4.23	4.26	4.26	4.26	4.26
	46	TC	7.93	8.02	8.11	8.19	8.48	8.48	8.48	8.57	8.74	8.74	8.74	8.83	9.46	9.46	9.46	9.46
		S/T	0.82	0.94	1.00	1.00	0.63	0.75	0.86	0.98	0.54	0.65	0.77	0.88	0.34	0.44	0.55	0.66
		PI	4.68	4.68	4.68	4.68	4.70	4.70	4.70	4.70	4.71	4.71	4.71	4.71	4.75	4.75	4.75	4.75
	50	TC	7.45	7.53	7.62	7.70	7.96	7.96	8.05	8.14	8.22	8.22	8.22	8.31	8.91	8.91	8.91	8.91
		S/T	0.84	0.97	1.00	1.00	0.64	0.76	0.89	1.00	0.55	0.67	0.79	0.91	0.33	0.45	0.56	0.67
		PI	5.06	5.06	5.06	5.06	5.09	5.09	5.09	5.09	5.10	5.10	5.10	5.10	5.14	5.14	5.14	5.14
1728	-15	TC	11.28	11.28	11.40	11.52	11.87	11.87	11.87	11.99	12.15	12.15	12.15	12.15	12.92	12.92	12.92	12.92
		S/T	0.74	0.85	0.98	1.00	0.58	0.68	0.78	0.87	0.51	0.60	0.70	0.79	0.34	0.42	0.51	0.60
		PI	2.72	2.72	2.72	2.72	2.71	2.71	2.71	2.71	2.71	2.71	2.71	2.71	2.71	2.71	2.71	2.71
	-10	TC	11.21	11.21	11.33	11.45	11.80	11.80	11.80	11.92	12.08	12.08	12.08	12.08	12.87	12.87	12.87	12.87
		S/T	0.75	0.85	0.99	1.00	0.58	0.68	0.79	0.87	0.51	0.60	0.70	0.80	0.34	0.43	0.51	0.60
		PI	2.71	2.71	2.71	2.71	2.71	2.71	2.71	2.71	2.70	2.70	2.70	2.70	2.71	2.71	2.71	2.71
	-5	TC	11.14	11.14	11.26	11.38	11.76	11.76	11.76	11.88	12.04	12.04	12.04	12.04	12.84	12.84	12.84	12.84
		S/T	0.75	0.86	0.99	1.00	0.59	0.68	0.79	0.88	0.52	0.60	0.70	0.80	0.34	0.43	0.52	0.60
		PI	2.70	2.70	2.70	2.70	2.70	2.70	2.70	2.70	2.70	2.70	2.70	2.70	2.71	2.71	2.71	2.71
	0	TC	11.09	11.09	11.21	11.32	11.71	11.71	11.71	11.83	12.01	12.01	12.01	12.01	12.83	12.83	12.83	12.83
		S/T	0.75	0.86	1.00	1.00	0.59	0.69	0.79	0.88	0.52	0.61	0.71	0.80	0.34	0.43	0.52	0.61
		PI	2.71	2.71	2.71	2.71	2.71	2.71	2.71	2.71	2.71	2.71	2.71	2.71	2.72	2.72	2.72	2.72
	5	TC	11.03	11.03	11.15	11.27	11.67	11.67	11.67	11.79	11.97	11.97	11.97	11.97	12.82	12.82	12.82	12.82
		S/T	0.76	0.87	1.00	1.00	0.59	0.69	0.80	0.89	0.52	0.61	0.71	0.81	0.34	0.43	0.52	0.61
		PI	2.74	2.74	2.74	2.74	2.74	2.74	2.74	2.74	2.73	2.73	2.73	2.73	2.74	2.74	2.74	2.74
	10	TC	10.96	10.96	11.08	11.20	11.61	11.61	11.61	11.73	11.92	11.92	11.92	11.92	12.78	12.78	12.78	12.78
		S/T	0.76	0.87	1.00	1.00	0.59	0.69	0.80	0.89	0.52	0.61	0.71	0.81	0.35	0.44	0.52	0.61
		PI	2.78	2.78	2.78	2.78	2.78	2.78	2.78	2.78	2.77	2.77	2.77	2.77	2.78	2.78	2.78	2.78
	15	TC	10.87	10.87	10.99	11.11	11.54	11.54	11.54	11.65	11.85	11.85	11.85	11.85	12.73	12.73	12.73	12.73
		S/T	0.77	0.88	0.98	1.00	0.60	0.70	0.81	0.90	0.53	0.62	0.72	0.82	0.35	0.44	0.53	0.62
		PI	2.85	2.85	2.85	2.85	2.84	2.84	2.84	2.84	2.84	2.84	2.84	2.84	2.84	2.84	2.84	2.84
	20	TC	10.75	10.75	10.87	10.98	11.41	11.41	11.41	11.53	11.73	11.73	11.73	11.73	12.62	12.62	12.62	12.62
		S/T	0.77	0.88	0.98	1.00	0.60	0.70	0.81	0.90	0.53	0.62	0.72	0.82	0.35	0.44	0.53	0.62
		PI	2.95	2.95	2.95	2.95	2.94	2.94	2.94	2.94	2.93	2.93	2.93	2.93	2.92	2.92	2.92	2.92
	25	TC	10.26	10.38	10.49	10.61	10.90	10.90	10.90	11.01	11.21	11.21	11.21	11.21	12.07	12.07	12.07	12.07
		S/T	0.78	0.89	1.00	1.00	0.61	0.72	0.82	0.92	0.53	0.63	0.74	0.84	0.34	0.44	0.54	0.63
		PI	3.25	3.25	3.25	3.25	3.25	3.25	3.25	3.25	3.25	3.25	3.25	3.25	3.25	3.25	3.25	3.25
	30	TC	9.77	9.86	9.95	10.03	10.41	10.41	10.41	10.52	10.72	10.72	10.72	10.72	11.53	11.53	11.53	11.53
		S/T	0.80	0.91	1.00	1.00	0.62	0.73	0.84	0.95	0.53	0.64	0.75	0.86	0.34	0.44	0.54	0.64
		PI	3.56	3.56	3.56	3.56	3.57	3.57	3.57	3.57	3.57	3.57	3.57	3.57	3.59	3.59	3.59	3.59
	35	TC	9.29	9.37	9.46	9.54	9.89	9.89	9.89	9.98	10.18	10.18	10.35	10.18	10.98	10.98	10.98	10.98
		S/T	0.81	0.93	1.00	1.00	0.62	0.74	0.86	0.97	0.54	0.65	0.76	0.88	0.34	0.44	0.55	0.65
		PI	3.89	3.89	3.89	3.89	3.91	3.91	3.91	3.91	3.91	3.91	3.92	3.91	3.91	3.91	3.91	3.91
	40	TC	8.75	8.84	8.93	9.01	9.33	9.33	9.37	9.46	9.60	9.60	9.70	9.64	10.38	10.38	10.38	10.38
		S/T	0.84	0.98	1.00	1.00	0.64	0.77	0.89	1.00	0.55	0.67	0.80	0.92	0.33	0.45	0.56	0.68
		PI	4.29	4.29	4.29	4.29	4.32	4.32	4.32	4.32	4.32	4.32	4.33	4.32	4.34	4.34	4.34	4.34
	46	TC	8.11	8.20	8.28	8.37	8.66	8.66	8.74	8.83	8.91	8.91	8.91	9.00	9.66	9.66	9.66	9.66
		S/T	0.86	1.00	1.00	1.00	0.65	0.78	0.91	1.00	0.55	0.68	0.81	0.94	0.33	0.45	0.57	0.69
		PI	4.77	4.77	4.77	4.77	4.80	4.80	4.80	4.80	4.81	4.81	4.81	4.81	4.85	4.85	4.85	4.85
	50	TC	7.59	7.68	7.76	7.85	8.14	8.14	8.22	8.31	8.40	8.40	8.40	8.48	9.12	9.12	9.12	9.12
		S/T	0.89	1.00	1.00	1.00	0.66	0.80	0.94	1.00	0.56	0.70	0.84	0.97	0.33	0.45	0.58	0.91
		PI	5.17	5.17	5.17	5.17	5.19	5.19	5.19	5.19	5.21	5.21	5.21	5.21	5.25	5.25	5.25	5.25

1955	-15	TC	11.49	11.61	11.73	11.85	12.08	12.08	12.08	12.20	12.38	12.38	12.38	12.38	13.15	13.15	13.15	13.15
		S/T	0.77	0.88	1.00	1.00	0.60	0.70	0.81	0.98	0.51	0.62	0.72	0.83	0.33	0.42	0.52	0.63
		PI	2.77	2.77	2.77	2.77	2.77	2.77	2.77	2.77	2.76	2.76	2.76	2.76	2.76	2.76	2.76	2.76
	-10	TC	11.42	11.54	11.66	11.78	12.01	12.01	12.01	12.13	12.32	12.32	12.32	12.32	13.11	13.11	13.11	13.11
		S/T	0.78	0.88	1.00	1.00	0.60	0.71	0.82	0.98	0.51	0.62	0.73	0.83	0.33	0.43	0.52	0.63
		PI	2.76	2.76	2.76	2.76	2.76	2.76	2.76	2.76	2.76	2.76	2.76	2.76	2.76	2.76	2.76	2.76
	-5	TC	11.35	11.47	11.59	11.71	11.97	11.97	11.97	12.08	12.28	12.28	12.28	12.28	13.07	13.07	13.07	13.07
		S/T	0.78	0.89	1.00	1.00	0.60	0.71	0.82	0.99	0.52	0.62	0.73	0.84	0.33	0.43	0.53	0.63
		PI	2.76	2.76	2.76	2.76	2.76	2.76	2.76	2.76	2.76	2.76	2.76	2.76	2.77	2.77	2.77	2.77
	0	TC	11.29	11.41	11.53	11.65	11.92	11.92	11.92	12.04	12.24	12.24	12.24	12.24	13.06	13.06	13.06	13.06
		S/T	0.78	0.89	1.00	1.00	0.61	0.72	0.82	0.99	0.52	0.63	0.74	0.84	0.33	0.43	0.53	0.64
		PI	2.77	2.77	2.77	2.77	2.77	2.77	2.77	2.77	2.77	2.77	2.77	2.77	2.78	2.78	2.78	2.78
	5	TC	11.24	11.36	11.47	11.59	11.87	11.87	11.87	11.99	12.20	12.20	12.20	12.20	13.05	13.05	13.05	13.05
		S/T	0.79	0.90	1.00	1.00	0.61	0.72	0.83	1.00	0.52	0.63	0.74	0.85	0.33	0.43	0.53	0.64
		PI	2.79	2.79	2.79	2.79	2.79	2.79	2.79	2.79	2.79	2.79	2.79	2.79	2.80	2.80	2.80	2.80
	10	TC	11.17	11.29	11.40	11.52	11.82	11.82	11.82	11.94	12.15	12.15	12.15	12.15	13.02	13.02	13.02	13.02
		S/T	0.79	0.90	1.00	1.00	0.61	0.72	0.83	1.00	0.52	0.63	0.74	0.85	0.34	0.44	0.53	0.64
		PI	2.84	2.84	2.84	2.84	2.83	2.83	2.83	2.83	2.83	2.83	2.83	2.83	2.83	2.83	2.83	2.83
	15	TC	11.08	11.19	11.31	11.43	11.74	11.74	11.74	11.86	12.08	12.08	12.08	12.08	12.96	12.96	12.96	12.96
		S/T	0.80	0.91	1.00	1.00	0.62	0.73	0.84	0.95	0.53	0.64	0.75	0.86	0.34	0.44	0.54	0.65
		PI	2.91	2.91	2.91	2.91	2.90	2.90	2.90	2.90	2.89	2.89	2.89	2.89	2.89	2.89	2.89	2.89
	20	TC	10.95	11.07	11.18	11.30	11.61	11.61	11.61	11.73	11.96	11.96	11.96	11.96	12.85	12.85	12.85	12.85
		S/T	0.80	0.91	1.00	1.00	0.62	0.73	0.84	0.95	0.53	0.64	0.75	0.86	0.34	0.44	0.54	0.65
		PI	3.01	3.01	3.01	3.01	3.00	3.00	3.00	3.00	2.99	2.99	2.99	2.99	2.98	2.98	2.98	2.98
	25	TC	10.46	10.58	10.69	10.81	11.10	11.10	11.10	11.21	11.44	11.44	11.44	11.44	12.30	12.30	12.30	12.30
		S/T	0.81	0.93	1.00	1.00	0.63	0.74	0.86	0.98	0.54	0.65	0.77	0.88	0.34	0.44	0.55	0.66
		PI	3.31	3.31	3.31	3.31	3.31	3.31	3.31	3.31	3.31	3.31	3.31	3.31	3.31	3.31	3.31	3.31
	30	TC	9.98	10.06	10.18	10.29	10.61	10.61	10.61	10.72	10.92	10.92	10.92	11.04	11.76	11.76	11.76	11.76
		S/T	0.83	0.96	1.00	1.00	0.63	0.76	0.88	1.00	0.54	0.66	0.78	0.90	0.33	0.45	0.56	0.67
		PI	3.63	3.63	3.63	3.63	3.64	3.64	3.64	3.64	3.65	3.65	3.65	3.65	3.66	3.66	3.66	3.66
	35	TC	9.46	9.54	9.63	9.72	10.06	10.06	10.18	10.29	10.38	10.38	**10.55**	10.67	11.21	11.21	11.21	11.21
		S/T	0.85	0.98	1.00	1.00	0.64	0.77	0.90	1.00	0.55	0.67	**0.80**	0.91	0.33	0.45	0.57	0.68
		PI	3.97	3.97	3.97	3.97	3.99	3.99	3.99	3.99	3.99	3.99	**4.00**	3.99	4.02	4.02	4.02	4.02
	40	TC	8.91	9.00	9.08	9.17	9.49	9.49	9.59	9.69	9.79	9.79	9.89	9.99	10.60	10.60	10.60	10.60
		S/T	0.89	1.00	1.00	1.00	0.66	0.81	0.94	1.00	0.56	0.70	0.84	0.97	0.33	0.45	0.58	0.90
		PI	4.38	4.38	4.38	4.38	4.40	4.40	4.40	4.40	4.41	4.41	4.41	4.41	4.44	4.44	4.44	4.44
	46	TC	8.25	8.34	8.43	8.51	8.80	8.80	8.89	8.97	9.09	9.09	9.09	9.17	9.86	9.86	9.86	9.86
		S/T	0.90	1.00	1.00	1.00	0.67	0.82	0.97	1.00	0.57	0.71	0.85	0.99	0.32	0.46	0.59	0.92
		PI	4.87	4.87	4.87	4.87	4.89	4.89	4.89	4.89	4.91	4.91	4.91	4.91	4.95	4.95	4.95	4.95
	50	TC	7.74	7.82	7.91	7.99	8.28	8.28	8.37	8.45	8.57	8.57	8.57	8.66	9.29	9.29	9.29	9.29
		S/T	0.93	1.00	1.00	1.00	0.69	0.85	1.00	1.00	0.57	0.73	0.88	1.00	0.32	0.46	0.60	0.97
		PI	5.27	5.27	5.27	5.27	5.30	5.30	5.30	5.30	5.31	5.31	5.31	5.31	5.35	5.35	5.35	5.35

TC:Total Cooling Capacity (kW)

S/T:Sensible Cooling Capacity Ratio

PI:Power Input(kW)

Note: The table shows the case where the operation frequency of a compressor is fixed.

48k																		
INDOOR AIRFLOW (CMH)	OUTDOOR DB(℃)	ID WB (℃)	16.0				18.0				19.0				22.0			
		ID DB (℃)	23.0	25.0	27.0	29.0	23.0	25.0	27.0	29.0	23.0	25.0	27.0	29.0	23.0	25.0	27.0	29.0
1600	-15	TC	14.70	14.69	14.69	14.84	15.46	15.79	15.79	15.79	15.84	15.84	15.84	15.84	16.83	16.83	16.83	16.83
		S/T	0.68	0.75	0.82	0.90	0.55	0.62	0.70	0.76	0.49	0.56	0.63	0.70	0.36	0.42	0.48	0.55
		PI	3.33	3.33	3.33	3.33	3.32	3.32	3.32	3.32	3.32	3.32	3.32	3.32	3.31	3.31	3.31	3.31
	-10	TC	14.61	14.60	14.60	14.75	15.37	15.71	15.71	15.71	15.76	15.76	15.76	15.76	16.77	16.77	16.77	16.77
		S/T	0.68	0.76	0.82	0.90	0.55	0.62	0.70	0.77	0.49	0.56	0.63	0.70	0.36	0.43	0.49	0.55
		PI	3.31	3.32	3.32	3.31	3.31	3.31	3.31	3.31	3.31	3.31	3.31	3.31	3.32	3.32	3.32	3.32
	-5	TC	14.52	14.51	14.51	14.66	15.31	15.65	15.65	15.65	15.70	15.70	15.70	15.70	16.73	16.73	16.73	16.73
		S/T	0.68	0.76	0.83	0.91	0.56	0.63	0.70	0.77	0.50	0.57	0.63	0.70	0.36	0.43	0.49	0.56
		PI	3.31	3.31	3.31	3.31	3.31	3.31	3.31	3.31	3.31	3.31	3.31	3.31	3.32	3.32	3.32	3.32
	0	TC	14.45	14.44	14.44	14.59	15.26	15.59	15.59	15.59	15.66	15.66	15.66	15.66	16.71	16.71	16.71	16.71
		S/T	0.69	0.76	0.83	0.91	0.56	0.63	0.71	0.77	0.50	0.57	0.64	0.71	0.36	0.43	0.49	0.56
		PI	3.32	3.32	3.32	3.32	3.32	3.32	3.32	3.32	3.33	3.33	3.33	3.33	3.33	3.33	3.33	3.33
	5	TC	14.38	14.37	14.37	14.51	15.20	15.53	15.53	15.53	15.61	15.61	15.61	15.61	16.70	16.70	16.70	16.70
		S/T	0.69	0.77	0.84	0.92	0.56	0.63	0.71	0.78	0.50	0.57	0.64	0.71	0.36	0.43	0.49	0.56
		PI	3.35	3.35	3.35	3.35	3.35	3.35	3.35	3.35	3.35	3.35	3.35	3.35	3.36	3.36	3.36	3.36
	10	TC	14.29	14.28	14.28	14.43	15.13	15.45	15.45	15.45	15.54	15.54	15.54	15.54	16.66	16.66	16.66	16.66
		S/T	0.69	0.77	0.84	0.92	0.56	0.64	0.71	0.78	0.50	0.57	0.64	0.71	0.37	0.44	0.50	0.56
		PI	3.41	3.41	3.41	3.41	3.40	3.40	3.40	3.40	3.40	3.40	3.40	3.40	3.40	3.40	3.40	3.40
	15	TC	14.18	14.16	14.16	14.31	15.02	15.35	15.35	15.35	15.45	15.45	15.45	15.45	16.59	16.59	16.59	16.59
		S/T	0.70	0.78	0.85	0.93	0.57	0.64	0.72	0.79	0.51	0.58	0.65	0.72	0.37	0.44	0.50	0.57
		PI	3.49	3.49	3.49	3.49	3.48	3.48	3.48	3.48	3.48	3.48	3.48	3.48	3.47	3.47	3.47	3.47
	20	TC	14.02	14.00	14.00	14.15	14.87	14.87	14.87	14.87	15.30	15.30	15.30	15.30	16.44	16.44	16.44	16.44
		S/T	0.70	0.78	0.85	0.93	0.57	0.64	0.72	0.79	0.51	0.58	0.65	0.72	0.37	0.44	0.50	0.57
		PI	3.61	3.62	3.62	3.61	3.60	3.60	3.60	3.60	3.60	3.60	3.60	3.60	3.58	3.58	3.58	3.58
	25	TC	13.37	13.37	13.37	13.52	14.21	14.21	14.21	14.21	14.64	14.64	14.64	14.64	15.73	15.73	15.73	15.73
		S/T	0.71	0.79	0.87	0.94	0.57	0.65	0.73	0.80	0.51	0.59	0.66	0.73	0.37	0.44	0.51	0.57
		PI	3.98	3.98	3.98	3.98	3.98	3.98	3.98	3.98	3.98	3.98	3.98	3.98	3.98	3.98	3.98	3.98
	30	TC	12.74	12.74	12.74	12.86	13.55	13.55	13.55	13.55	13.95	13.95	13.95	13.95	15.04	15.04	15.04	15.04
		S/T	0.72	0.80	0.88	0.96	0.58	0.66	0.74	0.81	0.51	0.59	0.67	0.74	0.37	0.44	0.51	0.58
		PI	4.36	4.36	4.36	4.36	4.37	4.37	4.37	4.37	4.37	4.37	4.37	4.37	4.39	4.39	4.39	4.39
	35	TC	12.11	12.11	12.23	12.34	12.89	12.89	12.89	12.89	13.29	13.29	13.49	13.29	14.32	14.32	14.32	14.32
		S/T	0.72	0.81	0.90	0.98	0.58	0.66	0.75	0.83	0.51	0.60	0.67	0.76	0.36	0.44	0.51	0.59
		PI	4.77	4.77	4.77	4.77	4.78	4.78	4.78	4.78	4.79	4.79	4.80	4.79	4.82	4.82	4.82	4.82
	40	TC	11.40	11.40	11.51	11.62	12.13	12.13	12.13	12.13	12.52	12.52	12.63	12.52	13.52	13.52	13.52	13.52
		S/T	0.74	0.84	0.94	1.00	0.59	0.68	0.77	0.86	0.52	0.61	0.70	0.78	0.35	0.44	0.52	0.60
		PI	5.26	5.26	5.26	5.26	5.27	5.27	5.27	5.27	5.28	5.28	5.29	5.28	5.32	5.32	5.32	5.32
	46	TC	10.55	10.55	10.67	10.78	11.24	11.24	11.24	11.24	11.61	11.61	11.61	11.61	12.59	12.59	12.59	12.59
		S/T	0.75	0.86	0.95	1.00	0.59	0.69	0.79	0.88	0.52	0.61	0.71	0.80	0.35	0.44	0.52	0.61
		PI	5.84	5.84	5.84	5.84	5.87	5.87	5.87	5.87	5.88	5.88	5.88	5.88	5.93	5.93	5.93	5.93
	50	TC	9.89	9.89	9.98	10.06	10.58	10.58	10.58	10.69	10.92	10.92	10.92	10.92	11.84	11.84	11.84	11.84
		S/T	0.77	0.88	0.98	1.00	0.60	0.70	0.80	0.90	0.52	0.62	0.72	0.82	0.35	0.44	0.53	0.62
		PI	6.33	6.33	6.33	6.33	6.35	6.35	6.35	6.35	6.37	6.37	6.37	6.37	6.42	6.42	6.42	6.42
1850	-15	TC	15.02	15.02	15.17	15.33	15.79	15.79	15.79	15.79	16.17	16.17	16.17	16.17	17.19	17.19	17.19	17.19
		S/T	0.70	0.78	0.98	1.00	0.56	0.64	0.71	0.79	0.49	0.57	0.65	0.72	0.35	0.42	0.49	0.56
		PI	3.40	3.40	3.40	3.40	3.39	3.39	3.39	3.39	3.39	3.39	3.39	3.39	3.38	3.38	3.38	3.38
	-10	TC	14.94	14.94	15.08	15.23	15.71	15.71	15.71	15.71	16.09	16.09	16.09	16.09	17.13	17.13	17.13	17.13
		S/T	0.70	0.79	0.99	1.00	0.56	0.64	0.72	0.80	0.49	0.57	0.65	0.73	0.35	0.43	0.49	0.56
		PI	3.38	3.38	3.38	3.38	3.38	3.38	3.38	3.38	3.38	3.38	3.38	3.38	3.38	3.38	3.38	3.38
	-5	TC	14.85	14.85	14.99	15.14	15.65	15.65	15.65	15.65	16.03	16.03	16.03	16.03	17.09	17.09	17.09	17.09
		S/T	0.70	0.79	0.99	1.00	0.57	0.64	0.72	0.80	0.50	0.58	0.65	0.73	0.35	0.43	0.50	0.57
		PI	3.38	3.38	3.38	3.38	3.38	3.38	3.38	3.38	3.38	3.38	3.38	3.38	3.39	3.39	3.39	3.39
	0	TC	14.77	14.77	14.92	15.07	15.59	15.59	15.59	15.59	15.99	15.99	15.99	15.99	17.07	17.07	17.07	17.07
		S/T	0.71	0.79	1.00	1.00	0.57	0.65	0.73	0.80	0.50	0.58	0.66	0.74	0.35	0.43	0.50	0.57
		PI	3.39	3.39	3.39	3.39	3.39	3.39	3.39	3.39	3.39	3.39	3.39	3.39	3.40	3.40	3.40	3.40
	5	TC	14.70	14.70	14.84	14.99	15.53	15.53	15.53	15.53	15.94	15.94	15.94	15.94	17.06	17.06	17.06	17.06
		S/T	0.71	0.80	1.00	1.00	0.57	0.65	0.73	0.81	0.50	0.58	0.66	0.74	0.35	0.43	0.50	0.57
		PI	3.42	3.42	3.42	3.42	3.42	3.42	3.42	3.42	3.42	3.42	3.42	3.42	3.42	3.42	3.42	3.42
	10	TC	14.61	14.61	14.75	14.90	15.45	15.45	15.45	15.45	15.87	15.87	15.87	15.87	17.01	17.01	17.01	17.01
		S/T	0.71	0.80	1.00	1.00	0.57	0.65	0.73	0.81	0.50	0.58	0.66	0.74	0.36	0.44	0.50	0.57
		PI	3.48	3.48	3.48	3.48	3.47	3.47	3.47	3.47	3.47	3.47	3.47	3.47	3.47	3.47	3.47	3.47
	15	TC	14.49	14.49	14.63	14.78	15.35	15.35	15.35	15.35	15.77	15.77	15.77	15.77	16.94	16.94	16.94	16.94
		S/T	0.72	0.81	0.89	0.97	0.58	0.66	0.74	0.82	0.51	0.59	0.67	0.75	0.36	0.44	0.51	0.58
		PI	3.56	3.56	3.56	3.56	3.56	3.56	3.56	3.56	3.55	3.55	3.55	3.55	3.54	3.54	3.54	3.54
	20	TC	14.33	14.33	14.47	14.61	15.19	15.19	15.19	15.19	15.62	15.62	15.62	15.62	16.80	16.80	16.80	16.80
		S/T	0.72	0.81	0.89	0.97	0.58	0.66	0.74	0.82	0.51	0.59	0.67	0.75	0.36	0.44	0.51	0.58
		PI	3.69	3.69	3.69	3.69	3.68	3.68	3.68	3.68	3.67	3.67	3.67	3.67	3.65	3.65	3.65	3.65
	25	TC	13.67	13.67	13.81	13.95	14.50	14.50	14.50	14.50	14.93	14.93	14.93	14.93	16.08	16.08	16.08	16.08
		S/T	0.73	0.82	0.91	0.99	0.58	0.67	0.75	0.84	0.52	0.60	0.68	0.76	0.36	0.44	0.51	0.59
		PI	4.07	4.07	4.07	4.07	4.06	4.06	4.06	4.06	4.06	4.06	4.06	4.06	4.07	4.07	4.07	4.07
	30	TC	13.01	13.01	13.15	13.29	13.84	13.84	13.84	13.84	14.27	14.27	14.27	14.27	15.36	15.36	15.36	15.36
		S/T	0.74	0.83	0.93	1.00	0.59	0.68	0.77	0.86	0.52	0.60	0.69	0.78	0.36	0.44	0.52	0.60
		PI	4.45	4.45	4.45	4.45	4.46	4.46	4.46	4.46	4.47	4.47	4.47	4.47	4.48	4.48	4.48	4.48
	35	TC	12.37	12.37	12.49	12.60	13.15	13.15	13.15	13.15	13.58	13.58	13.78	13.58	14.64	14.64	14.64	14.64
		S/T	0.75	0.85	0.95	1.00	0.59	0.69	0.78	0.88	0.52	0.61	0.70	0.79	0.35	0.44	0.52	0.61
		PI	4.86	4.86	4.86	4.86	4.88	4.88	4.88	4.88	4.89	4.89	4.90	4.89	4.89	4.89	4.89	4.89
	40	TC	11.55	11.60	11.72	11.83	12.31	12.31	12.31	12.36	12.71	12.71	12.82	12.71	13.72	13.72	13.72	13.72
		S/T	0.77	0.88	0.99	1.00	0.60	0.71	0.81	0.91	0.53	0.63	0.73	0.83	0.35	0.44	0.53	0.62
		PI	5.37	5.37	5.37	5.37	5.39	5.39	5.39	5.39	5.41	5.41	5.41	5.41	5.43	5.43	5.43	5.43
	46	TC	10.68	10.79	10.91	11.02	11.42	11.42	11.42	11.54	11.79	11.79	11.79	11.79	12.76	12.76	12.76	12.76
		S/T	0.79	0.90	1.00	1.00	0.61	0.72	0.83	0.93	0.53	0.63	0.74	0.84	0.34	0.44	0.54	0.63
		PI	5.97	5.97	5.97	5.97	6.00	6.00	6.00	6.00	6.02	6.02	6.02	6.02	6.07	6.07	6.07	6.07
	50	TC	10.03	10.14	10.25	10.37	10.74	10.74	10.74	10.85	11.08	11.08	11.08	11.08	12.02	12.02	12.02	12.02
		S/T	0.81	0.92	1.00	1.00	0.62	0.73	0.85	0.96	0.53	0.65	0.76	0.87	0.34	0.44	0.54	0.91
		PI	6.47	6.47	6.47	6.47	6.50	6.50	6.50	6.50	6.51	6.51	6.51	6.51	6.57	6.57	6.57	6.57

2100	-15	TC	15.33	15.33	15.48	15.63	16.12	16.12	16.12	16.12	16.53	16.53	16.53	16.53	17.54	17.54	17.54	17.54
		S/T	0.71	0.81	1.00	1.00	0.57	0.66	0.74	0.98	0.50	0.59	0.67	0.75	0.34	0.42	0.50	0.58
		PI	3.47	3.47	3.47	3.47	3.45	3.45	3.45	3.45	3.45	3.45	3.45	3.45	3.45	3.45	3.45	3.45
	-10	TC	15.23	15.23	15.38	15.53	16.03	16.03	16.03	16.03	16.45	16.45	16.45	16.45	17.48	17.48	17.48	17.48
		S/T	0.72	0.82	1.00	1.00	0.57	0.66	0.75	0.98	0.50	0.59	0.67	0.76	0.34	0.43	0.50	0.58
		PI	3.45	3.45	3.45	3.45	3.45	3.45	3.45	3.45	3.44	3.44	3.44	3.44	3.45	3.45	3.45	3.45
	-5	TC	15.14	15.14	15.29	15.44	15.97	15.97	15.97	15.97	16.38	16.38	16.38	16.38	17.44	17.44	17.44	17.44
		S/T	0.72	0.82	1.00	1.00	0.58	0.66	0.75	0.99	0.51	0.59	0.67	0.76	0.34	0.43	0.51	0.59
		PI	3.45	3.45	3.45	3.45	3.44	3.44	3.44	3.44	3.44	3.44	3.44	3.44	3.46	3.46	3.46	3.46
	0	TC	15.07	15.07	15.22	15.36	15.91	15.91	15.91	15.91	16.34	16.34	16.34	16.34	17.42	17.42	17.42	17.42
		S/T	0.73	0.82	1.00	1.00	0.58	0.67	0.75	0.99	0.51	0.60	0.68	0.76	0.34	0.43	0.51	0.59
		PI	3.46	3.46	3.46	3.46	3.45	3.45	3.45	3.45	3.46	3.46	3.46	3.46	3.47	3.47	3.47	3.47
	5	TC	14.99	14.99	15.14	15.29	15.85	15.85	15.85	15.85	16.29	16.29	16.29	16.29	17.41	17.41	17.41	17.41
		S/T	0.73	0.83	1.00	1.00	0.58	0.67	0.76	1.00	0.51	0.60	0.68	0.77	0.34	0.43	0.51	0.59
		PI	3.49	3.49	3.49	3.49	3.49	3.49	3.49	3.49	3.48	3.48	3.48	3.48	3.50	3.50	3.50	3.50
	10	TC	14.90	14.90	15.05	15.19	15.78	15.78	15.78	15.78	16.22	16.22	16.22	16.22	17.36	17.36	17.36	17.36
		S/T	0.73	0.83	1.00	1.00	0.58	0.67	0.76	1.00	0.51	0.60	0.68	0.77	0.35	0.44	0.51	0.59
		PI	3.55	3.55	3.55	3.55	3.54	3.54	3.54	3.54	3.54	3.54	3.54	3.54	3.54	3.54	3.54	3.54
	15	TC	14.78	14.78	14.93	15.07	15.67	15.67	15.67	15.67	16.12	16.12	16.12	16.12	17.29	17.29	17.29	17.29
		S/T	0.74	0.84	0.93	1.00	0.59	0.68	0.77	0.86	0.52	0.61	0.69	0.78	0.35	0.44	0.52	0.60
		PI	3.64	3.64	3.64	3.64	3.62	3.62	3.62	3.62	3.62	3.62	3.62	3.62	3.62	3.62	3.62	3.62
	20	TC	14.61	14.61	14.76	14.90	15.50	15.50	15.50	15.50	15.96	15.96	15.96	15.96	17.14	17.14	17.14	17.14
		S/T	0.74	0.84	0.93	1.00	0.59	0.68	0.77	0.86	0.52	0.61	0.69	0.78	0.35	0.44	0.52	0.60
		PI	3.76	3.76	3.76	3.76	3.75	3.75	3.75	3.75	3.74	3.74	3.74	3.74	3.73	3.73	3.73	3.73
	25	TC	13.95	13.95	14.10	14.24	14.81	14.81	14.81	14.81	15.25	15.25	15.25	15.25	16.42	16.42	16.42	16.42
		S/T	0.75	0.85	0.95	1.00	0.59	0.69	0.78	0.88	0.52	0.61	0.71	0.80	0.35	0.44	0.52	0.61
		PI	4.15	4.15	4.15	4.15	4.15	4.15	4.15	4.15	4.15	4.15	4.15	4.15	4.15	4.15	4.15	4.15
	30	TC	13.29	13.29	13.44	13.58	14.13	14.13	14.13	14.27	14.56	14.56	14.56	14.56	15.68	15.68	15.68	15.68
		S/T	0.76	0.87	0.97	1.00	0.60	0.70	0.80	0.89	0.52	0.62	0.72	0.81	0.35	0.44	0.53	0.62
		PI	4.54	4.54	4.54	4.54	4.55	4.55	4.55	4.55	4.56	4.56	4.56	4.56	4.58	4.58	4.58	4.58
	35	TC	12.63	12.75	12.86	12.98	13.44	13.44	13.44	13.58	13.87	13.87	**14.07**	13.87	14.96	14.96	14.96	14.96
		S/T	0.78	0.89	0.99	1.00	0.61	0.71	0.82	0.92	0.53	0.63	**0.73**	0.83	0.35	0.44	0.53	0.63
		PI	4.96	4.96	4.96	4.96	4.98	4.98	4.98	4.98	4.99	4.99	**5.00**	4.99	5.03	5.03	5.03	5.03
	40	TC	11.79	11.91	12.02	12.14	12.57	12.57	12.57	12.70	12.97	12.97	13.08	13.02	14.01	14.01	14.01	14.01
		S/T	0.81	0.92	1.00	1.00	0.62	0.74	0.85	0.96	0.53	0.65	0.76	0.87	0.34	0.44	0.55	0.90
		PI	5.48	5.48	5.48	5.48	5.50	5.50	5.50	5.50	5.51	5.51	5.52	5.51	5.56	5.56	5.56	5.56
	46	TC	10.91	11.02	11.14	11.25	11.65	11.65	11.65	11.76	12.02	12.02	12.02	12.13	13.02	13.02	13.02	13.02
		S/T	0.82	0.94	1.00	1.00	0.63	0.75	0.87	0.98	0.54	0.66	0.77	0.88	0.34	0.44	0.55	0.92
		PI	6.10	6.10	6.10	6.10	6.12	6.12	6.12	6.12	6.14	6.14	6.14	6.14	6.19	6.19	6.19	6.19
	50	TC	10.25	10.37	10.48	10.60	10.97	10.97	11.08	11.19	11.31	11.31	11.31	11.42	12.28	12.28	12.28	12.28
		S/T	0.84	0.97	1.00	1.00	0.64	0.77	0.89	1.00	0.55	0.67	0.79	0.91	0.33	0.45	0.56	0.97
		PI	6.60	6.60	6.60	6.60	6.63	6.63	6.63	6.63	6.65	6.65	6.65	6.65	6.70	6.70	6.70	6.70

TC:Total Cooling Capacity (kW)

S/T:Sensible Cooling Capacity Ratio

PI:Power Input(kW)

Note: The table shows the case where the operation frequency of a compressor is fixed.

55k																		
INDOOR AIRFLOW (CMH)	OUTDOOR DB(℃)	ID WB (℃)	16.0				18.0				19.0				22.0			
		ID DB (℃)	23.0	25.0	27.0	29.0	23.0	25.0	27.0	29.0	23.0	25.0	27.0	29.0	23.0	25.0	27.0	29.0
1650	-15	TC	16.55	16.56	16.56	16.74	17.41	17.77	17.77	17.77	17.84	17.84	17.84	17.84	18.95	18.95	18.95	18.95
		S/T	0.67	0.73	0.80	0.87	0.55	0.61	0.68	0.74	0.49	0.56	0.62	0.68	0.37	0.42	0.48	0.54
		PI	3.77	3.77	3.77	3.77	3.75	3.75	3.75	3.75	3.75	3.75	3.75	3.75	3.75	3.75	3.75	3.75
	-10	TC	16.45	16.46	16.46	16.64	17.31	17.67	17.67	17.67	17.75	17.75	17.75	17.75	18.89	18.89	18.89	18.89
		S/T	0.67	0.74	0.81	0.87	0.55	0.62	0.68	0.75	0.49	0.56	0.62	0.68	0.37	0.43	0.49	0.54
		PI	3.75	3.75	3.75	3.75	3.74	3.74	3.74	3.74	3.74	3.74	3.74	3.74	3.75	3.75	3.75	3.75
	-5	TC	16.36	16.36	16.36	16.54	17.24	17.61	17.61	17.61	17.68	17.68	17.68	17.68	18.84	18.84	18.84	18.84
		S/T	0.67	0.74	0.81	0.88	0.56	0.62	0.68	0.75	0.50	0.57	0.62	0.68	0.37	0.43	0.49	0.55
		PI	3.74	3.74	3.74	3.74	3.74	3.74	3.74	3.74	3.74	3.74	3.74	3.74	3.76	3.76	3.76	3.76
	0	TC	16.27	16.28	16.28	16.46	17.18	17.54	17.54	17.54	17.63	17.63	17.63	17.63	18.82	18.82	18.82	18.82
		S/T	0.68	0.74	0.81	0.88	0.56	0.62	0.69	0.75	0.50	0.57	0.63	0.69	0.37	0.43	0.49	0.55
		PI	3.76	3.76	3.76	3.76	3.75	3.75	3.75	3.75	3.76	3.76	3.76	3.76	3.77	3.77	3.77	3.77
	5	TC	16.19	16.20	16.20	16.38	17.11	17.47	17.47	17.47	17.58	17.58	17.58	17.58	18.81	18.81	18.81	18.81
		S/T	0.68	0.75	0.82	0.89	0.56	0.63	0.69	0.76	0.50	0.57	0.63	0.69	0.37	0.43	0.49	0.55
		PI	3.79	3.79	3.79	3.79	3.79	3.79	3.79	3.79	3.79	3.79	3.79	3.79	3.80	3.80	3.80	3.80
	10	TC	16.09	16.10	16.10	16.28	17.03	17.39	17.39	17.39	17.50	17.50	17.50	17.50	18.76	18.76	18.76	18.76
		S/T	0.68	0.75	0.82	0.89	0.56	0.63	0.69	0.76	0.50	0.57	0.63	0.69	0.38	0.44	0.50	0.55
		PI	3.86	3.86	3.86	3.86	3.84	3.84	3.84	3.84	3.84	3.84	3.84	3.84	3.85	3.85	3.85	3.85
	15	TC	15.96	15.97	15.97	16.15	16.92	17.27	17.27	17.27	17.40	17.40	17.40	17.40	18.68	18.68	18.68	18.68
		S/T	0.69	0.76	0.83	0.90	0.57	0.63	0.70	0.77	0.51	0.58	0.64	0.70	0.38	0.44	0.50	0.56
		PI	3.95	3.95	3.95	3.95	3.94	3.94	3.94	3.94	3.93	3.93	3.93	3.93	3.93	3.93	3.93	3.93
	20	TC	15.78	15.79	15.79	15.96	16.74	16.74	16.74	16.74	17.23	17.23	17.23	17.23	18.52	18.52	18.52	18.52
		S/T	0.69	0.76	0.83	0.90	0.57	0.64	0.70	0.77	0.51	0.58	0.64	0.70	0.38	0.44	0.50	0.56
		PI	4.09	4.09	4.09	4.09	4.07	4.07	4.07	4.07	4.06	4.06	4.06	4.06	4.05	4.05	4.05	4.05
	25	TC	15.04	15.04	15.04	15.19	15.99	15.99	15.99	15.99	16.48	16.48	16.48	16.48	17.71	17.71	17.71	17.71
		S/T	0.70	0.77	0.84	0.91	0.57	0.64	0.71	0.78	0.51	0.58	0.65	0.71	0.38	0.44	0.50	0.56
		PI	4.50	4.50	4.50	4.50	4.50	4.50	4.50	4.50	4.50	4.50	4.50	4.50	4.50	4.50	4.50	4.50
	30	TC	14.36	14.36	14.36	14.50	15.25	15.25	15.25	15.25	15.71	15.71	15.71	15.71	16.94	16.94	16.94	16.94
		S/T	0.70	0.78	0.86	0.93	0.57	0.64	0.72	0.79	0.51	0.58	0.65	0.72	0.37	0.44	0.50	0.57
		PI	4.93	4.93	4.93	4.93	4.94	4.94	4.94	4.94	4.95	4.95	4.95	4.95	4.97	4.97	4.97	4.97
	35	TC	13.64	13.64	13.64	13.78	14.50	14.50	14.50	14.50	14.96	14.96	15.19	14.96	16.14	16.14	16.14	16.14
		S/T	0.71	0.79	0.87	0.95	0.58	0.65	0.73	0.80	0.51	0.59	0.66	0.73	0.37	0.44	0.51	0.57
		PI	5.39	5.39	5.39	5.39	5.41	5.41	5.41	5.41	5.42	5.42	5.43	5.42	5.46	5.46	5.46	5.46
	40	TC	12.83	12.83	12.88	13.01	13.66	13.66	13.66	13.66	14.09	14.09	14.22	14.09	15.23	15.23	15.23	15.23
		S/T	0.73	0.81	0.90	0.99	0.58	0.67	0.75	0.83	0.51	0.60	0.68	0.76	0.36	0.44	0.51	0.59
		PI	5.95	5.95	5.95	5.95	5.97	5.97	5.97	5.97	5.98	5.98	5.99	5.98	6.03	6.03	6.03	6.03
	46	TC	11.87	11.87	11.99	12.10	12.68	12.68	12.68	12.68	13.08	13.08	13.08	13.08	14.17	14.17	14.17	14.17
		S/T	0.73	0.83	0.92	1.00	0.59	0.67	0.76	0.85	0.52	0.60	0.69	0.77	0.36	0.44	0.51	0.59
		PI	6.61	6.61	6.61	6.61	6.64	6.64	6.64	6.64	6.66	6.66	6.66	6.66	6.72	6.72	6.72	6.72
	50	TC	11.13	11.13	11.24	11.36	11.90	11.90	11.90	11.90	12.30	12.30	12.30	12.30	13.34	13.34	13.34	13.34
		S/T	0.75	0.85	0.94	1.00	0.59	0.68	0.78	0.87	0.52	0.61	0.70	0.79	0.35	0.44	0.52	0.60
		PI	7.16	7.16	7.16	7.16	7.19	7.19	7.19	7.19	7.21	7.21	7.21	7.21	7.27	7.27	7.27	7.27
1950	-15	TC	16.90	16.90	16.90	17.08	17.77	17.77	17.77	17.77	18.23	18.23	18.23	18.23	19.34	19.34	19.34	19.34
		S/T	0.69	0.76	0.98	1.00	0.56	0.63	0.70	0.77	0.49	0.57	0.64	0.71	0.36	0.42	0.49	0.55
		PI	3.84	3.84	3.84	3.84	3.83	3.83	3.83	3.83	3.83	3.83	3.83	3.83	3.82	3.82	3.82	3.82
	-10	TC	16.80	16.80	16.80	16.98	17.67	17.67	17.67	17.67	18.14	18.14	18.14	18.14	19.28	19.28	19.28	19.28
		S/T	0.69	0.77	0.99	1.00	0.56	0.63	0.71	0.78	0.49	0.57	0.64	0.72	0.36	0.43	0.49	0.55
		PI	3.82	3.82	3.82	3.82	3.82	3.82	3.82	3.82	3.82	3.82	3.82	3.82	3.83	3.83	3.83	3.83
	-5	TC	16.70	16.70	16.70	16.88	17.61	17.61	17.61	17.61	18.07	18.07	18.07	18.07	19.23	19.23	19.23	19.23
		S/T	0.69	0.77	0.99	1.00	0.57	0.63	0.71	0.78	0.50	0.58	0.64	0.72	0.36	0.43	0.50	0.56
		PI	3.82	3.82	3.82	3.82	3.81	3.81	3.81	3.81	3.82	3.82	3.82	3.82	3.83	3.83	3.83	3.83
	0	TC	16.61	16.61	16.61	16.79	17.54	17.54	17.54	17.54	18.02	18.02	18.02	18.02	19.21	19.21	19.21	19.21
		S/T	0.70	0.77	1.00	1.00	0.57	0.64	0.72	0.78	0.50	0.58	0.65	0.73	0.36	0.43	0.50	0.56
		PI	3.83	3.83	3.83	3.83	3.83	3.83	3.83	3.83	3.84	3.84	3.84	3.84	3.85	3.85	3.85	3.85
	5	TC	16.53	16.53	16.53	16.71	17.47	17.47	17.47	17.47	17.96	17.96	17.96	17.96	19.19	19.19	19.19	19.19
		S/T	0.70	0.78	1.00	1.00	0.57	0.64	0.72	0.79	0.50	0.58	0.65	0.73	0.36	0.43	0.50	0.56
		PI	3.87	3.87	3.87	3.87	3.86	3.86	3.86	3.86	3.87	3.87	3.87	3.87	3.87	3.87	3.87	3.87
	10	TC	16.43	16.43	16.43	16.61	17.39	17.39	17.39	17.39	17.89	17.89	17.89	17.89	19.15	19.15	19.15	19.15
		S/T	0.70	0.78	1.00	1.00	0.57	0.64	0.72	0.79	0.50	0.58	0.65	0.73	0.37	0.44	0.50	0.56
		PI	3.93	3.93	3.93	3.93	3.92	3.92	3.92	3.92	3.93	3.93	3.93	3.93	3.93	3.93	3.93	3.93
	15	TC	16.30	16.30	16.30	16.47	17.27	17.27	17.27	17.27	17.78	17.78	17.78	17.78	19.06	19.06	19.06	19.06
		S/T	0.71	0.79	0.87	0.95	0.58	0.65	0.73	0.80	0.51	0.59	0.66	0.74	0.37	0.44	0.51	0.57
		PI	4.03	4.03	4.03	4.03	4.01	4.01	4.01	4.01	4.02	4.02	4.02	4.02	4.01	4.01	4.01	4.01
	20	TC	16.11	16.11	16.11	16.29	17.09	17.09	17.09	17.09	17.61	17.61	17.61	17.61	18.90	18.90	18.90	18.90
		S/T	0.71	0.79	0.87	0.95	0.58	0.65	0.73	0.80	0.51	0.59	0.66	0.74	0.37	0.44	0.51	0.57
		PI	4.17	4.17	4.17	4.17	4.15	4.15	4.15	4.15	4.15	4.15	4.15	4.15	4.13	4.13	4.13	4.13
	25	TC	15.37	15.37	15.51	15.65	16.31	16.31	16.31	16.31	16.80	16.80	16.80	16.80	18.10	18.10	18.10	18.10
		S/T	0.72	0.80	0.88	0.96	0.58	0.66	0.74	0.82	0.51	0.59	0.67	0.75	0.36	0.44	0.51	0.58
		PI	4.59	4.59	4.59	4.59	4.59	4.59	4.59	4.59	4.59	4.59	4.59	4.59	4.60	4.60	4.60	4.60
	30	TC	14.65	14.65	14.79	14.94	15.57	15.57	15.57	15.57	16.06	16.06	16.06	16.06	17.29	17.29	17.29	17.29
		S/T	0.73	0.82	0.90	0.99	0.58	0.67	0.75	0.83	0.52	0.60	0.68	0.76	0.36	0.44	0.51	0.59
		PI	5.03	5.03	5.03	5.03	5.04	5.04	5.04	5.04	5.05	5.05	5.05	5.05	5.07	5.07	5.07	5.07
	35	TC	13.90	13.90	14.05	14.19	14.82	14.82	14.82	14.82	15.28	15.28	15.51	15.28	16.49	16.49	16.49	16.49
		S/T	0.74	0.83	0.92	1.00	0.59	0.67	0.76	0.85	0.52	0.60	0.68	0.77	0.36	0.44	0.52	0.59
		PI	5.50	5.50	5.50	5.50	5.52	5.52	5.52	5.52	5.53	5.53	5.54	5.53	5.53	5.53	5.53	5.53
	40	TC	13.11	13.11	13.24	13.37	13.99	13.99	13.99	14.05	14.43	14.43	14.56	14.43	15.59	15.59	15.59	15.59
		S/T	0.76	0.86	0.96	1.00	0.60	0.69	0.79	0.88	0.52	0.62	0.71	0.80	0.35	0.44	0.52	0.61
		PI	6.08	6.08	6.08	6.08	6.10	6.10	6.10	6.10	6.12	6.12	6.12	6.12	6.14	6.14	6.14	6.14
	46	TC	12.13	12.13	12.25	12.36	12.97	12.97	12.97	13.11	13.40	13.40	13.40	13.40	14.49	14.49	14.49	14.49
		S/T	0.77	0.88	0.98	1.00	0.60	0.70	0.80	0.90	0.52	0.62	0.72	0.82	0.35	0.44	0.53	0.62
		PI	6.76	6.76	6.76	6.76	6.79	6.79	6.79	6.79	6.81	6.81	6.81	6.81	6.86	6.86	6.86	6.86
	50	TC	11.39	11.50	11.62	11.73	12.19	12.19	12.19	12.31	12.59	12.59	12.59	12.59	13.66	13.66	13.66	13.66
		S/T	0.79	0.90	1.00	1.00	0.61	0.72	0.82	0.93	0.53	0.63	0.74	0.84	0.34	0.44	0.54	0.91
		PI	7.32	7.32	7.32	7.32	7.35	7.35	7.35	7.35	7.37	7.37	7.37	7.37	7.43	7.43	7.43	7.43

2200	-15	TC	17.26	17.26	17.44	17.62	18.13	18.13	18.13	18.13	18.59	18.59	18.59	18.59	19.72	19.72	19.72	19.72
		S/T	0.70	0.79	1.00	1.00	0.56	0.65	0.72	0.98	0.50	0.58	0.66	0.73	0.35	0.42	0.49	0.57
		PI	3.92	3.92	3.92	3.92	3.91	3.91	3.91	3.91	3.90	3.90	3.90	3.90	3.90	3.90	3.90	3.90
	-10	TC	17.16	17.16	17.34	17.52	18.03	18.03	18.03	18.03	18.49	18.49	18.49	18.49	19.66	19.66	19.66	19.66
		S/T	0.71	0.80	1.00	1.00	0.56	0.65	0.73	0.98	0.50	0.58	0.66	0.74	0.35	0.43	0.49	0.57
		PI	3.90	3.90	3.90	3.90	3.90	3.90	3.90	3.90	3.90	3.90	3.90	3.90	3.90	3.90	3.90	3.90
	-5	TC	17.06	17.06	17.23	17.41	17.96	17.96	17.96	17.96	18.43	18.43	18.43	18.43	19.61	19.61	19.61	19.61
		S/T	0.71	0.80	1.00	1.00	0.57	0.65	0.73	0.99	0.51	0.59	0.66	0.74	0.35	0.43	0.50	0.58
		PI	3.90	3.90	3.90	3.90	3.89	3.89	3.89	3.89	3.90	3.90	3.90	3.90	3.91	3.91	3.91	3.91
	0	TC	16.97	16.97	17.15	17.33	17.89	17.89	17.89	17.89	18.38	18.38	18.38	18.38	19.59	19.59	19.59	19.59
		S/T	0.72	0.80	1.00	1.00	0.57	0.66	0.74	0.99	0.51	0.59	0.67	0.74	0.35	0.43	0.50	0.58
		PI	3.91	3.91	3.91	3.91	3.91	3.91	3.91	3.91	3.91	3.91	3.91	3.91	3.92	3.92	3.92	3.92
	5	TC	16.88	16.88	17.06	17.24	17.83	17.83	17.83	17.83	18.32	18.32	18.32	18.32	19.57	19.57	19.57	19.57
		S/T	0.72	0.81	1.00	1.00	0.57	0.66	0.74	1.00	0.51	0.59	0.67	0.75	0.35	0.43	0.50	0.58
		PI	3.95	3.95	3.95	3.95	3.94	3.94	3.94	3.94	3.94	3.94	3.94	3.94	3.95	3.95	3.95	3.95
	10	TC	16.78	16.78	16.96	17.13	17.74	17.74	17.74	17.74	18.24	18.24	18.24	18.24	19.52	19.52	19.52	19.52
		S/T	0.72	0.81	1.00	1.00	0.57	0.66	0.74	1.00	0.51	0.59	0.67	0.75	0.36	0.44	0.50	0.58
		PI	4.02	4.02	4.02	4.02	4.00	4.00	4.00	4.00	4.00	4.00	4.00	4.00	4.00	4.00	4.00	4.00
	15	TC	16.65	16.65	16.82	16.99	17.62	17.62	17.62	17.62	18.13	18.13	18.13	18.13	19.44	19.44	19.44	19.44
		S/T	0.73	0.82	0.90	0.99	0.58	0.67	0.75	0.84	0.52	0.60	0.68	0.76	0.36	0.44	0.51	0.59
		PI	4.11	4.11	4.11	4.11	4.10	4.10	4.10	4.10	4.09	4.09	4.09	4.09	4.09	4.09	4.09	4.09
	20	TC	16.46	16.46	16.63	16.80	17.43	17.43	17.43	17.43	17.95	17.95	17.95	17.95	19.27	19.27	19.27	19.27
		S/T	0.73	0.82	0.90	0.99	0.58	0.67	0.75	0.84	0.52	0.60	0.68	0.76	0.36	0.44	0.51	0.59
		PI	4.26	4.26	4.26	4.26	4.24	4.24	4.24	4.24	4.23	4.23	4.23	4.23	4.21	4.21	4.21	4.21
	25	TC	15.68	15.68	15.83	16.00	16.66	16.66	16.66	16.66	17.15	17.15	17.15	17.15	18.47	18.47	18.47	18.47
		S/T	0.74	0.83	0.92	1.00	0.59	0.68	0.76	0.85	0.52	0.60	0.69	0.78	0.36	0.44	0.52	0.60
		PI	4.69	4.69	4.69	4.69	4.68	4.68	4.68	4.68	4.68	4.68	4.68	4.68	4.69	4.69	4.69	4.69
	30	TC	14.94	14.94	15.08	15.22	15.88	15.88	15.88	15.88	16.37	16.37	16.37	16.37	17.64	17.64	17.64	17.64
		S/T	0.75	0.85	0.94	1.00	0.59	0.68	0.78	0.87	0.52	0.61	0.70	0.79	0.35	0.44	0.52	0.60
		PI	5.13	5.13	5.13	5.13	5.14	5.14	5.14	5.14	5.15	5.15	5.15	5.15	5.17	5.17	5.17	5.17
	35	TC	14.19	14.19	14.33	14.48	15.11	15.11	15.11	15.25	15.60	15.60	**15.83**	15.60	16.80	16.80	16.80	16.80
		S/T	0.76	0.86	0.96	1.00	0.60	0.70	0.79	0.89	0.52	0.62	**0.71**	0.81	0.35	0.44	0.53	0.61
		PI	5.61	5.61	5.61	5.61	5.63	5.63	5.63	5.63	5.64	5.64	**5.65**	5.64	5.68	5.68	5.68	5.68
	40	TC	13.38	13.43	13.56	13.69	14.26	14.26	14.26	14.41	14.72	14.72	14.85	14.72	15.89	15.89	15.89	15.89
		S/T	0.79	0.90	1.00	1.00	0.61	0.72	0.82	0.93	0.53	0.63	0.74	0.84	0.34	0.44	0.54	0.90
		PI	6.19	6.19	6.19	6.19	6.22	6.22	6.22	6.22	6.23	6.23	6.24	6.23	6.28	6.28	6.28	6.28
	46	TC	12.39	12.51	12.62	12.74	13.23	13.23	13.23	13.37	13.66	13.66	13.66	13.66	14.78	14.78	14.78	14.78
		S/T	0.80	0.91	1.00	1.00	0.62	0.73	0.84	0.95	0.53	0.64	0.75	0.86	0.34	0.44	0.54	0.92
		PI	6.89	6.89	6.89	6.89	6.92	6.92	6.92	6.92	6.94	6.94	6.94	6.94	7.00	7.00	7.00	7.00
	50	TC	11.62	11.73	11.85	11.96	12.42	12.42	12.42	12.54	12.85	12.85	12.85	12.85	13.92	13.92	13.92	13.92
		S/T	0.82	0.94	1.00	1.00	0.63	0.75	0.86	0.98	0.54	0.65	0.77	0.88	0.34	0.44	0.55	0.97
		PI	7.46	7.46	7.46	7.46	7.49	7.49	7.49	7.49	7.51	7.51	7.51	7.51	7.57	7.57	7.57	7.57

TC:Total Cooling Capacity (kW)

S/T:Sensible Cooling Capacity Ratio

PI:Power Input(kW)

Note: The table shows the case where the operation frequency of a compressor is fixed.

7.2 Heating

18k								[SI_Unit]
INDOOR AIRFLOW (CMH)	HEATING PERFORMANCE AT INDOOR DRY BULB TEMPERATURE							
	OUTDOOR DB(°C)	TC:TOTAL CAPACITY IN KILOWATTS (KW)				PI:TOTAL POWER IN KILOWATTS (KW)			
		Indoor Conditions (DB °C)				Indoor Conditions (DB °C)			
		16.0	20.0	22.0	24.0	16.0	20.0	22.0	24.0
723	-15.0	3.77	3.74	3.72	3.69	1.36	1.40	1.40	1.41
	-10.0	4.02	4.00	3.97	3.94	1.45	1.50	1.50	1.51
	-7.0	4.21	4.19	4.16	4.13	1.54	1.59	1.59	1.60
	-5.6	4.33	4.30	4.27	4.24	1.52	1.55	1.57	1.59
	-2.8	4.45	4.39	4.36	4.33	1.50	1.53	1.54	1.56
	0.0	4.48	4.45	4.42	4.39	1.47	1.50	1.51	1.53
	2.8	4.71	4.65	4.62	4.56	1.46	1.49	1.50	1.52
	5.6	5.06	5.00	4.97	4.94	1.45	1.47	1.49	1.50
	7.0	5.46	5.39	5.28	5.25	1.44	1.47	1.49	1.50
	11.1	5.68	5.63	5.57	5.54	1.42	1.44	1.46	1.47
	13.9	5.92	5.83	5.77	5.74	1.40	1.42	1.44	1.45
	16.7	6.12	6.03	5.97	5.95	1.38	1.40	1.42	1.43
	18.0	6.21	6.12	6.09	6.03	1.37	1.39	1.41	1.42
839	-15.0	3.84	3.81	3.79	3.76	1.38	1.42	1.42	1.43
	-10.0	4.10	4.07	4.05	4.02	1.47	1.52	1.52	1.53
	-7.0	4.29	4.27	4.24	4.21	1.56	1.61	1.61	1.62
	-5.6	4.42	4.39	4.36	4.33	1.54	1.57	1.59	1.60
	-2.8	4.53	4.48	4.45	4.42	1.51	1.54	1.56	1.57
	0.0	4.59	4.53	4.51	4.48	1.49	1.51	1.53	1.54
	2.8	4.80	4.74	4.71	4.68	1.47	1.50	1.52	1.53
	5.6	5.17	5.12	5.09	5.06	1.46	1.49	1.50	1.51
	7.0	5.57	5.51	5.39	5.37	1.46	1.48	1.50	1.51
	11.1	5.83	5.74	5.71	5.66	1.43	1.45	1.46	1.48
	13.9	6.03	5.95	5.92	5.86	1.40	1.43	1.44	1.45
	16.7	6.24	6.15	6.12	6.06	1.38	1.41	1.42	1.43
	18.0	6.35	6.26	6.21	6.18	1.37	1.40	1.41	1.42
958	-15.0	3.90	3.85	3.82	3.80	1.40	1.44	1.44	1.45
	-10.0	4.16	4.11	4.08	4.05	1.49	1.54	1.54	1.54
	-7.0	4.36	4.30	4.27	4.25	1.58	1.63	1.63	1.64
	-5.6	4.48	4.42	4.39	4.36	1.56	1.59	1.61	1.62
	-2.8	4.56	4.51	4.51	4.48	1.53	1.56	1.58	1.59
	0.0	4.62	4.56	4.53	4.51	1.50	1.53	1.55	1.56
	2.8	4.85	4.80	4.74	4.71	1.49	1.52	1.53	1.55
	5.6	5.23	5.17	5.12	5.09	1.48	1.51	1.52	1.53
	7.0	5.63	5.57	5.45	5.42	1.48	1.50	1.52	1.53
	11.1	5.89	5.80	5.77	5.71	1.44	1.47	1.48	1.50
	13.9	6.09	6.00	5.97	5.95	1.42	1.45	1.46	1.47
	16.7	6.32	6.24	6.18	6.15	1.40	1.43	1.44	1.45
	18.0	6.44	6.32	6.29	6.24	1.39	1.42	1.43	1.44

Note: The table shows the case where the operation frequency of a compressor is fixed.

24k									[SI_Unit]
INDOOR AIRFLOW (CMH)	HEATING PERFORMANCE AT INDOOR DRY BULB TEMPERATURE								
	OUTDOOR DB(°C)	TC:TOTAL CAPACITY IN KILOWATTS (KW)				PI:TOTAL POWER IN KILOWATTS (KW)			
		Indoor Conditions (DB °C)				Indoor Conditions (DB °C)			
		16.0	20.0	22.0	24.0	16.0	20.0	22.0	24.0
853	-15.0	5.20	5.15	5.13	5.10	2.27	2.34	2.30	2.32
	-10.0	5.56	5.50	5.48	5.45	2.42	2.50	2.45	2.47
	-7.0	5.82	5.77	5.74	5.71	2.57	2.66	2.61	2.63
	-5.6	5.97	5.91	5.88	5.85	2.51	2.53	2.55	2.56
	-2.8	6.11	6.03	6.00	5.97	2.39	2.42	2.43	2.44
	0.0	6.17	6.08	6.05	6.00	2.28	2.30	2.31	2.32
	2.8	6.43	6.34	6.32	6.26	2.19	2.20	2.21	2.22
	5.6	6.92	6.84	6.81	6.75	2.10	2.11	2.11	2.11
	7.0	7.48	7.39	7.24	7.19	2.05	2.01	2.06	2.07
	11.1	7.79	7.68	7.65	7.59	1.90	1.90	1.90	1.90
	13.9	8.08	7.97	7.91	7.85	1.80	1.80	1.79	1.79
	16.7	8.34	8.23	8.17	8.11	1.70	1.69	1.68	1.68
	18.0	8.49	8.37	8.32	8.23	1.65	1.64	1.63	1.62
1023	-15.0	5.30	5.25	5.20	5.17	2.29	2.37	2.33	2.34
	-10.0	5.66	5.60	5.55	5.52	2.45	2.53	2.48	2.50
	-7.0	5.93	5.87	5.81	5.79	2.60	2.68	2.64	2.66
	-5.6	6.08	6.03	5.97	5.94	2.53	2.56	2.57	2.59
	-2.8	6.23	6.14	6.11	6.08	2.42	2.44	2.45	2.46
	0.0	6.29	6.20	6.17	6.11	2.30	2.32	2.33	2.34
	2.8	6.55	6.49	6.43	6.40	2.21	2.22	2.23	2.24
	5.6	7.07	6.98	6.92	6.90	2.12	2.13	2.13	2.14
	7.0	7.63	7.53	7.39	7.33	2.08	2.03	2.08	2.09
	11.1	7.94	7.85	7.79	7.74	1.92	1.92	1.92	1.92
	13.9	8.23	8.11	8.05	8.00	1.82	1.81	1.81	1.81
	16.7	8.52	8.40	8.34	8.29	1.72	1.70	1.70	1.69
	18.0	8.66	8.52	8.46	8.40	1.67	1.65	1.65	1.64
1192	-15.0	5.36	5.31	5.28	5.26	2.31	2.39	2.34	2.36
	-10.0	5.72	5.67	5.64	5.62	2.46	2.55	2.50	2.52
	-7.0	6.00	5.94	5.91	5.88	2.62	2.71	2.66	2.68
	-5.6	6.14	6.08	6.05	6.03	2.55	2.58	2.60	2.61
	-2.8	6.29	6.23	6.17	6.14	2.44	2.46	2.47	2.49
	0.0	6.34	6.26	6.23	6.20	2.33	2.34	2.35	2.36
	2.8	6.63	6.55	6.52	6.46	2.23	2.25	2.25	2.26
	5.6	7.16	7.07	7.01	6.95	2.14	2.15	2.15	2.16
	7.0	7.71	7.62	7.48	7.42	2.10	2.05	2.10	2.11
	11.1	8.03	7.94	7.88	7.82	1.94	1.94	1.94	1.94
	13.9	8.32	8.20	8.14	8.08	1.84	1.83	1.83	1.83
	16.7	8.61	8.49	8.43	8.37	1.73	1.72	1.72	1.71
	18.0	8.75	8.63	8.58	8.52	1.68	1.67	1.66	1.66

Note: The table shows the case where the operation frequency of a compressor is fixed.

36k+MOD30U-36HFN8-QRD0W(GA)									[SI_Unit]
INDOOR AIRFLOW (CMH)	HEATING PERFORMANCE AT INDOOR DRY BULB TEMPERATURE								
	OUTDOOR DB(°C)	TC:TOTAL CAPACITY IN KILOWATTS (KW)				PI:TOTAL POWER IN KILOWATTS (KW)			
		Indoor Conditions (DB °C)				Indoor Conditions (DB °C)			
		16.0	20.0	22.0	24.0	16.0	20.0	22.0	24.0
1504	-15.0	8.07	8.00	7.95	7.92	3.40	3.52	3.48	3.51
	-10.0	8.62	8.54	8.49	8.46	3.63	3.75	3.71	3.74
	-7.0	9.03	8.95	8.89	8.86	3.85	3.98	3.94	3.97
	-5.6	9.24	9.15	9.09	9.06	3.78	3.84	3.86	3.89
	-2.8	9.44	9.32	9.27	9.24	3.66	3.71	3.73	3.76
	0.0	9.53	9.41	9.35	9.30	3.53	3.58	3.60	3.62
	2.8	9.93	9.82	9.76	9.67	3.44	3.48	3.50	3.52
	5.6	10.69	10.57	10.49	10.43	3.34	3.38	3.40	3.42
	7.0	11.50	11.38	11.14	11.08	3.30	3.29	3.35	3.37
	11.1	11.98	11.84	11.75	11.67	3.14	3.17	3.18	3.19
	13.9	12.42	12.25	12.16	12.07	3.03	3.05	3.06	3.07
	16.7	12.83	12.65	12.56	12.45	2.92	2.94	2.94	2.95
	18.0	13.03	12.86	12.74	12.65	2.87	2.88	2.89	2.89
1728	-15.0	8.26	8.16	8.13	8.08	3.44	3.55	3.52	3.54
	-10.0	8.82	8.71	8.68	8.63	3.67	3.79	3.75	3.78
	-7.0	9.24	9.13	9.10	9.04	3.89	4.03	3.98	4.01
	-5.6	9.44	9.32	9.30	9.24	3.83	3.87	3.90	3.93
	-2.8	9.64	9.53	9.47	9.41	3.70	3.75	3.77	3.80
	0.0	9.70	9.59	9.53	9.47	3.57	3.61	3.64	3.66
	2.8	10.14	10.02	9.93	9.88	3.47	3.51	3.53	3.55
	5.6	10.92	10.78	10.72	10.63	3.38	3.41	3.43	3.45
	7.0	11.76	11.61	11.38	11.29	3.33	3.32	3.38	3.40
	11.1	12.25	12.07	11.98	11.90	3.17	3.19	3.21	3.22
	13.9	12.65	12.48	12.39	12.30	3.06	3.08	3.09	3.10
	16.7	13.09	12.91	12.80	12.71	2.94	2.96	2.97	2.97
	18.0	13.29	13.12	13.00	12.91	2.89	2.90	2.91	2.92
1955	-15.0	8.33	8.23	8.21	8.16	3.47	3.59	3.55	3.58
	-10.0	8.90	8.79	8.76	8.71	3.70	3.82	3.79	3.81
	-7.0	9.32	9.21	9.18	9.12	3.93	4.06	4.02	4.05
	-5.6	9.53	9.41	9.38	9.32	3.85	3.91	3.94	3.96
	-2.8	9.73	9.61	9.56	9.50	3.73	3.78	3.81	3.83
	0.0	9.82	9.67	9.61	9.56	3.60	3.65	3.67	3.69
	2.8	10.25	10.11	10.05	9.96	3.50	3.54	3.57	3.59
	5.6	11.04	10.89	10.81	10.75	3.41	3.44	3.46	3.48
	7.0	11.88	11.72	11.49	11.40	3.37	3.35	3.41	3.43
	11.1	12.36	12.19	12.10	12.01	3.20	3.22	3.24	3.25
	13.9	12.80	12.62	12.54	12.45	3.08	3.10	3.11	3.12
	16.7	13.23	13.03	12.94	12.86	2.97	2.99	2.99	3.00
	18.0	13.44	13.23	13.15	13.06	2.92	2.93	2.94	2.94

Note: The table shows the case where the operation frequency of a compressor is fixed.

36k+MOD30U-36HFN8-RRD0W(GA)									[SI_Unit]
INDOOR AIRFLOW (CMH)	HEATING PERFORMANCE AT INDOOR DRY BULB TEMPERATURE								
	OUTDOOR DB(°C)	TC:TOTAL CAPACITY IN KILOWATTS (KW)				PI:TOTAL POWER IN KILOWATTS (KW)			
		Indoor Conditions (DB °C)				Indoor Conditions (DB °C)			
		16.0	20.0	22.0	24.0	16.0	20.0	22.0	24.0
1504	-15.0	7.96	7.89	7.83	7.78	3.34	3.46	3.42	3.45
	-10.0	8.50	8.42	8.37	8.31	3.57	3.69	3.65	3.68
	-7.0	8.91	8.82	8.76	8.71	3.79	3.92	3.88	3.91
	-5.6	9.14	9.05	8.99	8.94	3.72	3.78	3.81	3.84
	-2.8	9.34	9.26	9.20	9.14	3.60	3.66	3.69	3.71
	0.0	9.46	9.34	9.29	9.23	3.49	3.54	3.56	3.59
	2.8	9.89	9.75	9.69	9.63	3.40	3.45	3.47	3.49
	5.6	10.68	10.53	10.47	10.39	3.33	3.36	3.38	3.40
	7.0	11.53	11.38	11.14	11.06	3.29	3.29	3.35	3.37
	11.1	12.01	11.84	11.75	11.69	3.14	3.17	3.19	3.21
	13.9	12.45	12.27	12.19	12.10	3.04	3.07	3.08	3.10
	16.7	12.88	12.71	12.62	12.51	2.94	2.96	2.97	2.99
	18.0	13.09	12.91	12.83	12.71	2.90	2.91	2.92	2.93
1728	-15.0	8.11	8.04	7.99	7.94	3.38	3.49	3.46	3.48
	-10.0	8.66	8.58	8.53	8.47	3.60	3.72	3.69	3.72
	-7.0	9.08	8.99	8.93	8.88	3.83	3.96	3.92	3.95
	-5.6	9.31	9.23	9.17	9.11	3.76	3.82	3.85	3.88
	-2.8	9.55	9.43	9.37	9.31	3.64	3.69	3.72	3.75
	0.0	9.63	9.52	9.46	9.40	3.52	3.57	3.59	3.62
	2.8	10.10	9.95	9.89	9.84	3.44	3.48	3.50	3.52
	5.6	10.88	10.74	10.68	10.59	3.35	3.39	3.41	3.43
	7.0	11.76	11.61	11.38	11.29	3.32	3.32	3.38	3.40
	11.1	12.25	12.10	12.01	11.93	3.17	3.20	3.22	3.23
	13.9	12.71	12.54	12.45	12.36	3.07	3.10	3.11	3.12
	16.7	13.15	12.97	12.88	12.77	2.97	2.99	3.00	3.01
	18.0	13.38	13.17	13.09	13.00	2.92	2.94	2.95	2.96
1955	-15.0	8.22	8.12	8.07	8.04	3.41	3.53	3.49	3.52
	-10.0	8.78	8.67	8.62	8.59	3.64	3.76	3.73	3.75
	-7.0	9.20	9.08	9.03	9.00	3.87	4.00	3.96	3.99
	-5.6	9.43	9.31	9.26	9.23	3.80	3.86	3.89	3.92
	-2.8	9.63	9.52	9.46	9.40	3.68	3.73	3.76	3.79
	0.0	9.75	9.60	9.55	9.49	3.56	3.61	3.63	3.65
	2.8	10.18	10.07	9.98	9.92	3.47	3.51	3.54	3.56
	5.6	11.00	10.85	10.79	10.71	3.38	3.42	3.44	3.46
	7.0	11.88	11.72	11.49	11.40	3.36	3.35	3.41	3.43
	11.1	12.36	12.22	12.13	12.04	3.20	3.23	3.25	3.26
	13.9	12.83	12.65	12.56	12.48	3.10	3.12	3.14	3.15
	16.7	13.29	13.09	13.00	12.91	2.99	3.01	3.02	3.03
	18.0	13.49	13.32	13.20	13.12	2.94	2.96	2.97	2.98

Note: The table shows the case where the operation frequency of a compressor is fixed.

48k									[SI_Unit]
INDOOR AIRFLOW (CMH)	HEATING PERFORMANCE AT INDOOR DRY BULB TEMPERATURE								
	OUTDOOR DB(°C)	TC:TOTAL CAPACITY IN KILOWATTS (KW)				PI:TOTAL POWER IN KILOWATTS (KW)			
		Indoor Conditions (DB °C)				Indoor Conditions (DB °C)			
		16.0	20.0	22.0	24.0	16.0	20.0	22.0	24.0
1600	-15.0	10.33	10.20	10.15	10.08	4.64	4.79	4.78	4.82
	-10.0	11.03	10.89	10.84	10.76	4.95	5.11	5.10	5.14
	-7.0	11.55	11.41	11.36	11.27	5.26	5.42	5.41	5.46
	-5.6	11.99	11.85	11.79	11.70	5.20	5.30	5.35	5.40
	-2.8	12.40	12.25	12.17	12.08	5.10	5.21	5.26	5.31
	0.0	12.63	12.49	12.40	12.31	5.01	5.11	5.16	5.21
	2.8	13.36	13.18	13.10	13.01	4.97	5.07	5.11	5.16
	5.6	14.58	14.37	14.29	14.17	4.93	5.02	5.07	5.11
	7.0	15.85	15.63	15.25	15.13	4.92	5.00	5.05	5.10
	11.1	16.61	16.38	16.29	16.18	4.82	4.90	4.95	4.99
	13.9	17.34	17.11	16.99	16.87	4.75	4.83	4.88	4.92
	16.7	18.06	17.80	17.69	17.57	4.68	4.76	4.80	4.84
	18.0	18.41	18.15	18.03	17.89	4.65	4.73	4.77	4.81
1850	-15.0	10.54	10.42	10.37	10.32	4.68	4.83	4.82	4.87
	-10.0	11.26	11.12	11.07	11.02	4.99	5.15	5.14	5.20
	-7.0	11.79	11.65	11.60	11.54	5.31	5.48	5.46	5.52
	-5.6	12.23	12.08	12.02	11.96	5.25	5.35	5.40	5.45
	-2.8	12.66	12.49	12.43	12.34	5.15	5.26	5.31	5.35
	0.0	12.92	12.75	12.66	12.57	5.06	5.16	5.21	5.26
	2.8	13.65	13.47	13.39	13.27	5.02	5.12	5.17	5.21
	5.6	14.87	14.66	14.58	14.46	4.98	5.07	5.12	5.16
	7.0	16.17	15.95	15.57	15.45	4.97	5.05	5.11	5.15
	11.1	16.96	16.73	16.61	16.50	4.87	4.95	5.00	5.04
	13.9	17.69	17.45	17.34	17.22	4.80	4.88	4.92	4.97
	16.7	18.44	18.18	18.03	17.92	4.73	4.81	4.85	4.89
	18.0	18.79	18.53	18.38	18.26	4.70	4.78	4.82	4.86
2100	-15.0	10.64	10.51	10.46	10.41	4.72	4.88	4.87	4.92
	-10.0	11.36	11.23	11.17	11.12	5.04	5.21	5.20	5.24
	-7.0	11.90	11.76	11.70	11.65	5.35	5.53	5.52	5.57
	-5.6	12.34	12.20	12.14	12.08	5.30	5.40	5.45	5.51
	-2.8	12.78	12.63	12.55	12.46	5.21	5.31	5.36	5.41
	0.0	13.04	12.86	12.78	12.69	5.11	5.21	5.27	5.32
	2.8	13.79	13.62	13.50	13.42	5.07	5.17	5.22	5.27
	5.6	15.01	14.81	14.72	14.64	5.03	5.12	5.17	5.22
	7.0	16.34	16.12	15.71	15.63	5.02	5.10	5.16	5.20
	11.1	17.13	16.90	16.79	16.67	4.91	5.00	5.05	5.09
	13.9	17.89	17.66	17.51	17.40	4.84	4.93	4.97	5.02
	16.7	18.64	18.38	18.26	18.12	4.77	4.86	4.90	4.94
	18.0	18.99	18.73	18.61	18.47	4.74	4.82	4.86	4.90

Note: The table shows the case where the operation frequency of a compressor is fixed.

55k								[SI_Unit]
INDOOR AIRFLOW (CMH)	HEATING PERFORMANCE AT INDOOR DRY BULB TEMPERATURE							
	OUTDOOR DB(°C)	TC:TOTAL CAPACITY IN KILOWATTS (KW)				PI:TOTAL POWER IN KILOWATTS (KW)			
		Indoor Conditions (DB °C)				Indoor Conditions (DB °C)			
		16.0	20.0	22.0	24.0	16.0	20.0	22.0	24.0
1650	-15.0	11.22	11.07	11.02	10.95	4.88	5.03	5.07	5.14
	-10.0	11.98	11.82	11.77	11.69	5.20	5.36	5.41	5.48
	-7.0	12.55	12.38	12.33	12.24	5.53	5.70	5.75	5.83
	-5.6	13.11	12.93	12.88	12.79	5.52	5.67	5.74	5.82
	-2.8	13.63	13.49	13.40	13.31	5.52	5.67	5.75	5.83
	0.0	14.01	13.83	13.75	13.63	5.53	5.68	5.76	5.84
	2.8	14.91	14.70	14.62	14.50	5.60	5.75	5.83	5.91
	5.6	16.33	16.12	16.01	15.89	5.66	5.82	5.90	5.97
	7.0	17.87	17.65	17.18	17.07	5.71	5.93	5.95	6.03
	11.1	18.84	18.61	18.46	18.35	5.76	5.92	6.00	6.08
	13.9	19.74	19.48	19.33	19.22	5.80	5.96	6.04	6.12
	16.7	20.64	20.35	20.20	20.06	5.84	6.00	6.08	6.16
	18.0	21.07	20.78	20.64	20.49	5.85	6.02	6.10	6.18
1950	-15.0	11.44	11.29	11.24	11.16	4.92	5.08	5.12	5.19
	-10.0	12.21	12.05	12.00	11.92	5.25	5.42	5.47	5.53
	-7.0	12.79	12.63	12.57	12.49	5.58	5.75	5.81	5.88
	-5.6	13.37	13.20	13.14	13.05	5.57	5.72	5.80	5.87
	-2.8	13.92	13.75	13.66	13.57	5.58	5.73	5.81	5.88
	0.0	14.30	14.09	14.01	13.92	5.59	5.74	5.82	5.89
	2.8	15.20	14.99	14.88	14.79	5.65	5.81	5.89	5.96
	5.6	16.65	16.44	16.33	16.21	5.72	5.88	5.96	6.03
	7.0	18.22	18.00	17.50	17.39	5.77	5.99	6.01	6.09
	11.1	19.22	18.95	18.84	18.69	5.82	5.98	6.06	6.15
	13.9	20.12	19.85	19.71	19.59	5.86	6.02	6.10	6.19
	16.7	21.04	20.75	20.61	20.46	5.90	6.06	6.14	6.23
	18.0	21.48	21.19	21.04	20.90	5.91	6.08	6.16	6.24
2200	-15.0	11.53	11.41	11.33	11.28	4.98	5.13	5.18	5.25
	-10.0	12.31	12.18	12.10	12.05	5.31	5.47	5.52	5.60
	-7.0	12.90	12.76	12.68	12.62	5.64	5.82	5.87	5.95
	-5.6	13.49	13.34	13.25	13.20	5.63	5.79	5.86	5.94
	-2.8	14.07	13.89	13.80	13.72	5.64	5.79	5.87	5.95
	0.0	14.44	14.24	14.15	14.04	5.64	5.80	5.88	5.96
	2.8	15.34	15.14	15.05	14.94	5.71	5.87	5.95	6.02
	5.6	16.82	16.59	16.47	16.36	5.78	5.94	6.01	6.09
	7.0	18.43	18.17	17.68	17.56	5.83	6.05	6.07	6.15
	11.1	19.39	19.13	19.01	18.90	5.88	6.04	6.12	6.21
	13.9	20.32	20.06	19.91	19.77	5.92	6.08	6.16	6.25
	16.7	21.25	20.96	20.81	20.67	5.95	6.12	6.20	6.28
	18.0	21.68	21.39	21.25	21.07	5.97	6.14	6.22	6.30

Note: The table shows the case where the operation frequency of a compressor is fixed.

7. Noise Criterion Curves

7.1 Indoor Unit

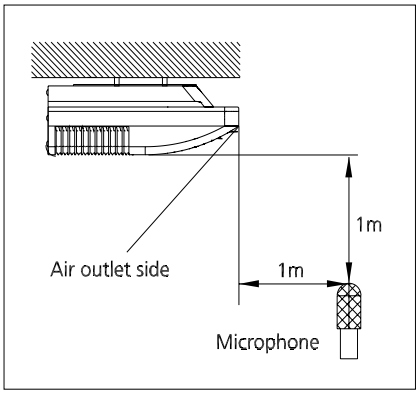

Ceiling

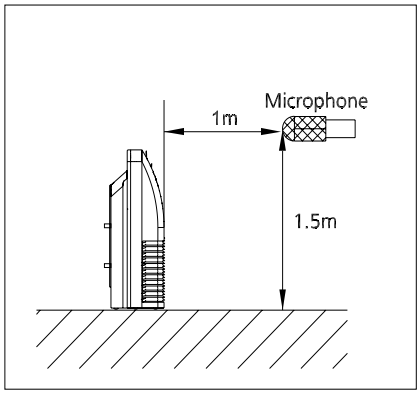

Floor

Notes:

-Sound measured at 1m away from the center of the unit.

-Data is valid at free field condition

-Data is valid at nominal operation condition

-Reference acoustic pressure OdB = 20μPa

-Sound level will vary depending on a range of factors such as the construction -(acoustic absorption coefficient) of particular room in which the equipment is installed.

-The operating conditions are assumed to be standard.

18k

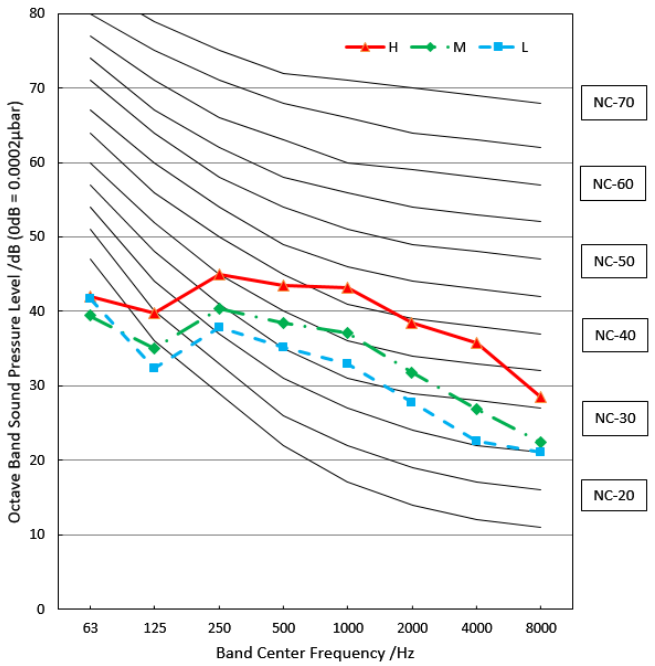

24k

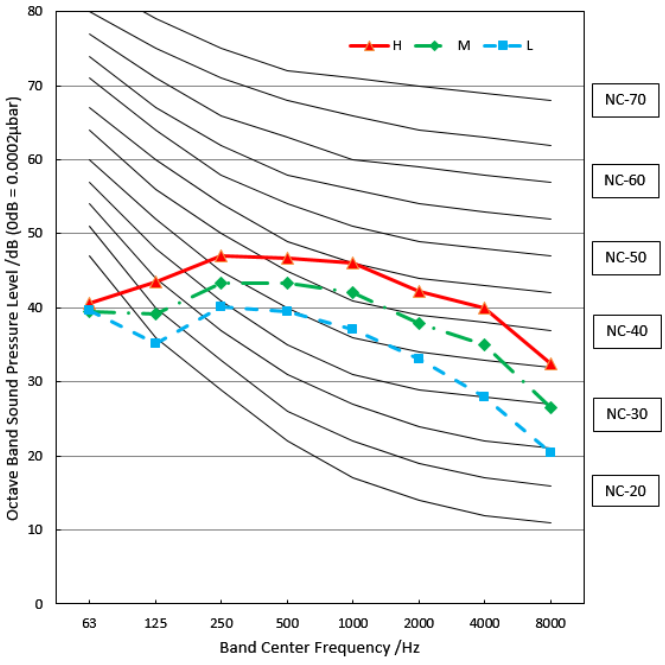

36k

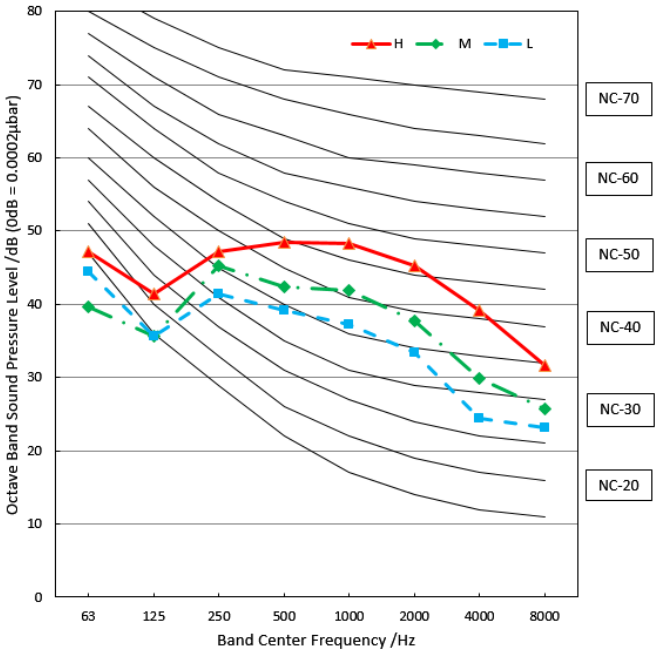
H
M
L
NC-70
NC-60
NC-50
NC-40
NC-30
NC-20
Octave Band Sound Pressure Level /dB (0dB = 0.0002μbar)
Band Center Frequency /Hz
0
10
20
30
40
50
60
70
80
63
125
250
500
1000
2000
4000
8000

48k

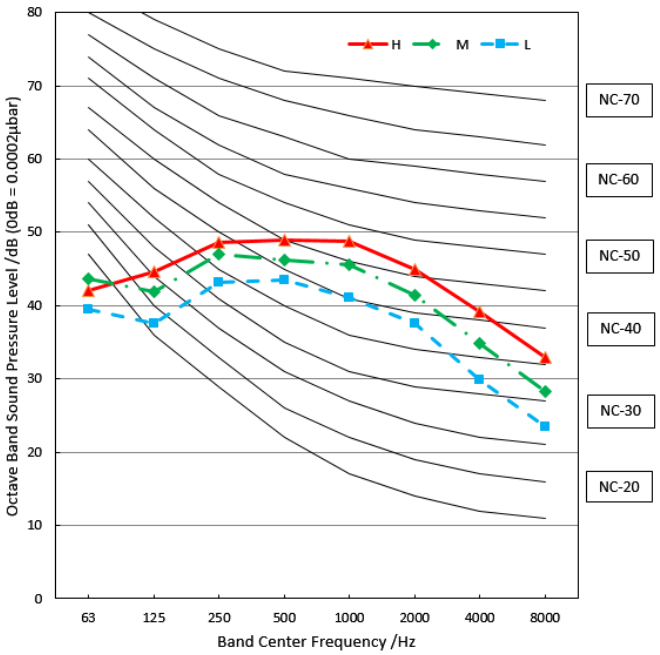
H
M
L
NC-70
NC-60
NC-50
NC-40
NC-30
NC-20
Octave Band Sound Pressure Level /dB (0dB = 0.0002μbar)
Band Center Frequency /Hz
0
10
20
30
40
50
60
70
80
63
125
250
500
1000
2000
4000
8000

55k

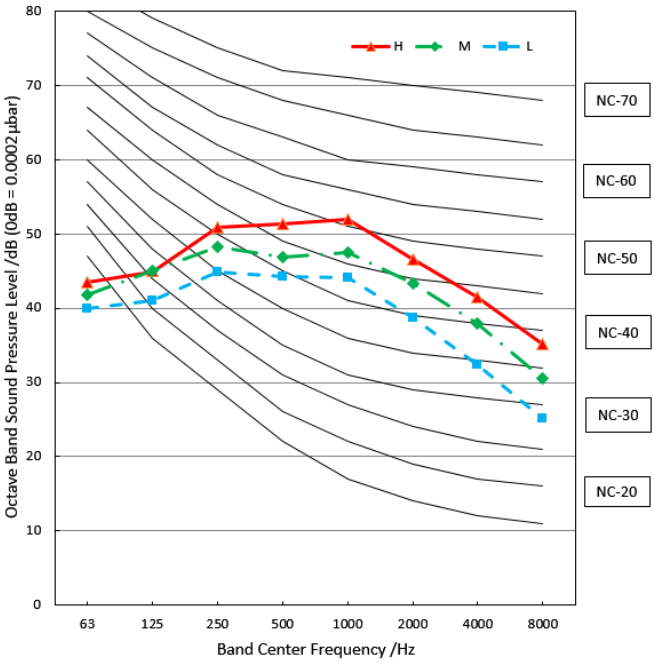
H
M
L
NC-70
NC-60
NC-50
NC-40
NC-30
NC-20
Octave Band Sound Pressure Level /dB (0dB = 0.0002 μbar)
Band Center Frequency /Hz
0
10
20
30
40
50
60
70
80
63
125
250
500
1000
2000
4000
8000

7. Electrical Characteristics

Capacity (Btu/h)		12k~18k	24k	30k	36k
OUDOOR UNIT POWER	Phase	1-phase	1-phase	1-phase	1-phase
	Frequency and Voltage	220-240V, 50Hz	220-240V, 50Hz	220-240V, 50Hz	220-240V, 50Hz
	Power Wiring (mm^2)	3×1.5	3×2.5	3×2.5	3×4.0
	Circuit Breaker/ Fuse (A)	25/20	25/20	50/40	50/40
Indoor/Outdoor Connecting Wiring	Weak Electric Signal)(mm^2)				
	Strong Electric Signal(mm^2)	4×1.0	4×1.0	4×1.0	4×1.0

Capacity (Btu/h)		36k	42k	48~55k
OUDOOR UNIT POWER	Phase	3-phase	1-phase	3-phase
	Frequency and Voltage	380-415V, 50Hz	220-240V, 50Hz	380-415V, 50Hz
	Power Wiring (mm^2)	5×2.5	3×4.0	5×2.5
	Circuit Breaker/ Fuse (A)	25/20	50/40	32/25
Indoor/Outdoor Connecting Wiring	Weak Electric Signal) (mm^2)			
	Strong Electric Signal(mm^2)	4×1.0	4×1.0	4×1.0

7. Electrical Wiring Diagrams

IDU Capacity (Btu/h)	IDU Wiring Diagram
12k~55k	16022700002948

Abbreviation	Paraphrase
Y/G	Yellow-Green Conductor
CAP1	Indoor Fan Capacitor
FAN1	Indoor Fan
PUMP	PUMP
L	LIVE
N	NEUTRAL
TO CCM Comm.Bus	Central Controller
T1	Indoor Room Temperature
T2	Coil Temperature of Indoor Heat Exchanger
P1	Super High Speed
P2	High Speed

Indoor unit wiring diagram: 16022700002948

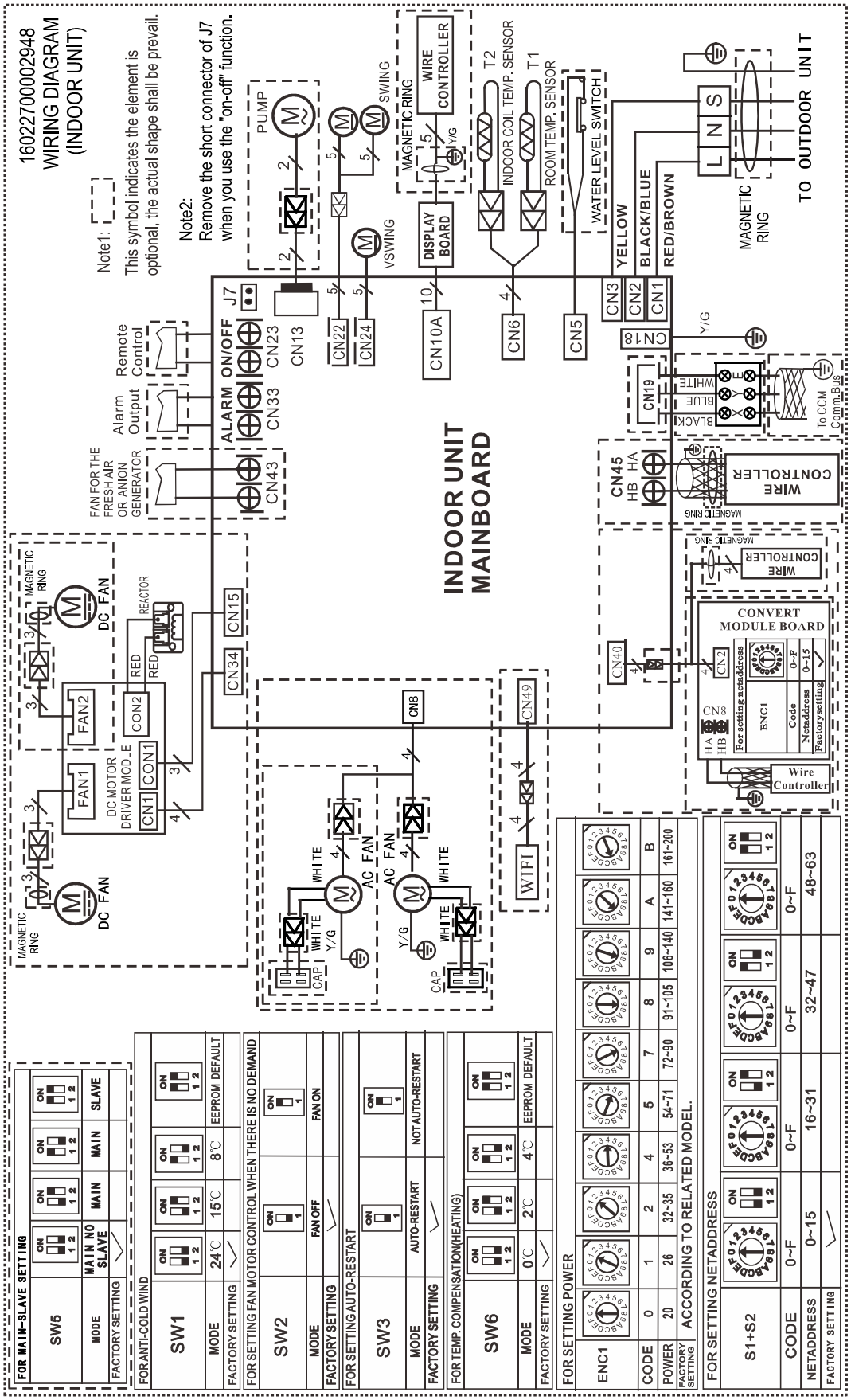

10.1 Some connectors introduce:

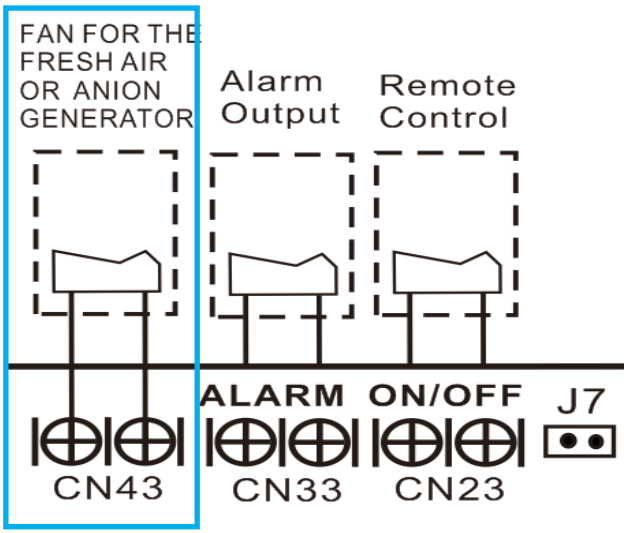

A. For new fresh motor terminal port (also for Anion generator) CN43:
1. Connect the fan motor to the port, no need care L/N of the motor;
2. The output voltage is the power supply;
3. The fresh motor can not excess 200W or 1A, follow the smaller one;
4. The new fresh motor will be worked when the indoor fan motor work ;when the indoor fan motor stops , the new fresh motor would be stopped;
5. When the unit enters force cooling mode or capacity testing mode , the fresh motor isn't work.

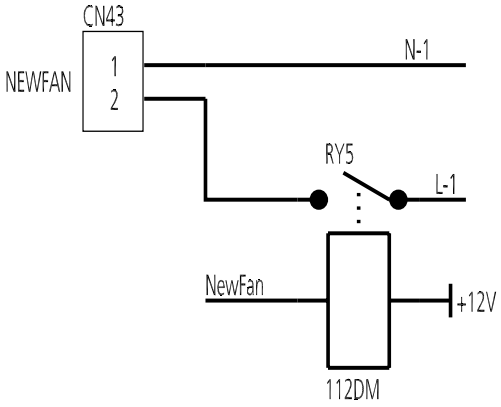

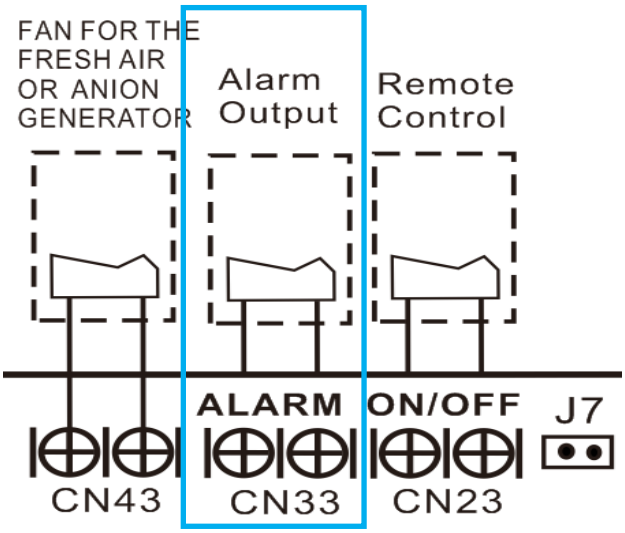

B For ALARM terminal port CN33

1. Provide the terminal port to connect ALARM, but no voltage of the terminal port, the power from the ALARM system (not from the unit);
2. Although design voltage can support higher voltage, but we strongly ask you connect the power less than 24V, current less than 0.5A;
3. When the unit occurs the problem, the relay would be closed, then ALARM works.

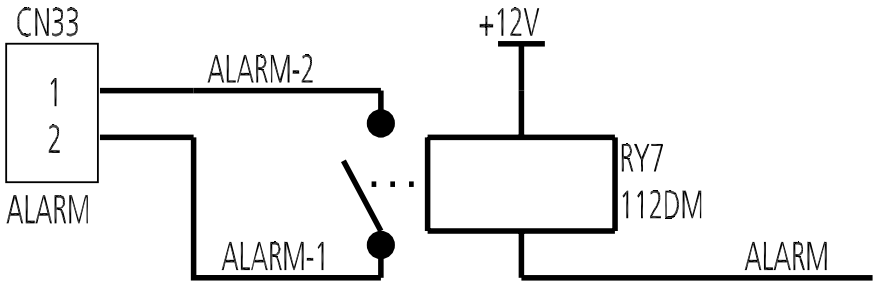

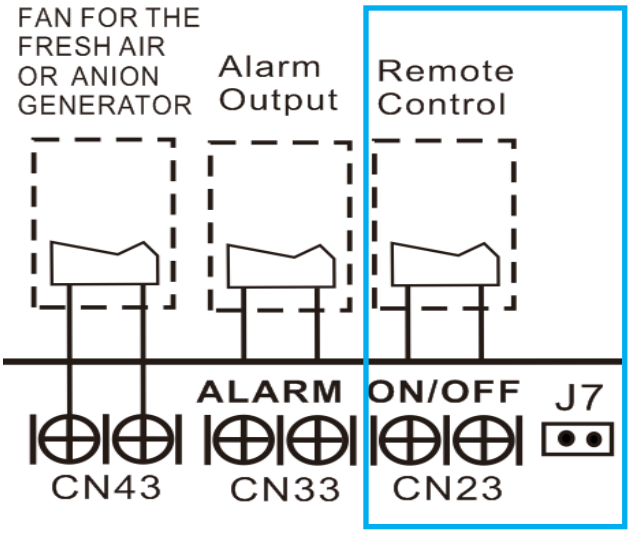

C. For remote control (ON-OFF) terminal port CN23 and short connector of J7

1. Remove the short connector of J7 when you use ON-OFF function;
2. When remote switch off (OPEN); the unit would be off;
3. When remote switch on (CLOSE); the unit would be on;
4. When close/open the remote switch, the unit would be responded the demand within 2 seconds;
5. When the remote switch on, you can use remote controller/ wire controller to select the mode what you want; when the remote switch off, the unit would not respond the demand from remote controller/wire controller.

when the remote switch off, but the remote controller/wire controller are on, CP code would be shown on the display board.

6. The voltage of the port is 12V DC, design Max. current is 5mA.

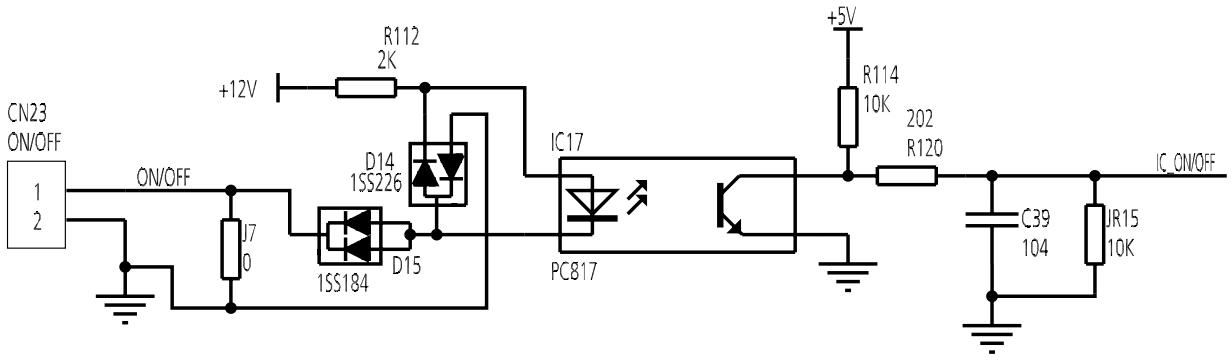

10.2 Micro-Switch Introduce:

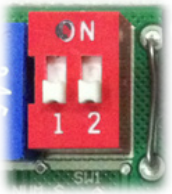

FOR ANTI-COLD WIND				
SW1	ON 1 2	ON 1 2	ON 1 2	ON 1 2
TEL0	24℃	15℃	8℃	EEPROM DEFAULT
FACTORY SETTING	✓			

A. Micro-switch SW1 is for selection of indoor fan stop temperature (TEL0) when it is in anti-cold wind action in heating mode.

Range: 24°C, 15°C, 8°C, according to EEROM setting (reserved for special customizing).

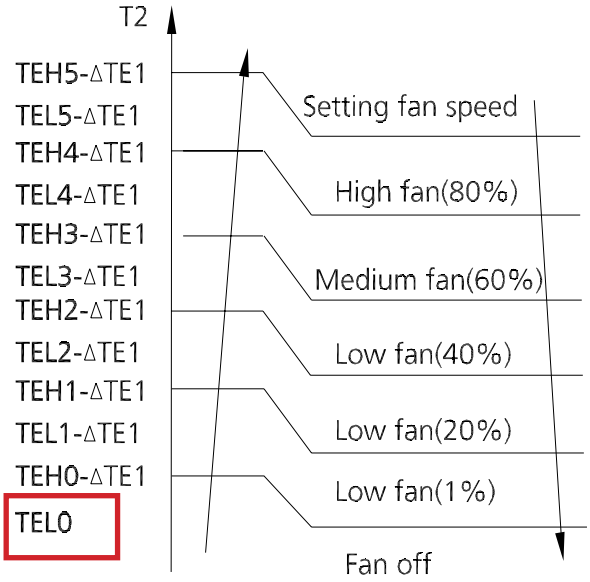



FOR SETTING FAN MOTOR CONTROL WHEN THERE IS NO DEMAND		
SW2	ON 1	ON 1
MODE	FAN OFF	FAN ON
FACTORY SETTING	✓	

B. Micro-switch SW2 is for selection of indoor FAN ACTION if room temperature reaches the set point and the compressor stops.

Range: OFF (in 127s), Keep running.



FOR SETTING AUTO-RESTART		
SW3	ON 1	ON 1
MODE	AUTO-RESTART	NOT AUTO-RESTART
FACTORY SETTING	✓	

C. Micro-switch SW3 is for selection of auto-restart function.

Range: Active, inactive



FOR TEMP. COMPENSATION(HEATING)				
SW6	ON 1 2	ON 1 2	ON 1 2	ON 1 2
CODE	0℃	2℃	4℃	EEPROM default
FACTORY SETTING	✓			

D. Micro-switch SW6 is for selection of temperature compensation in heating mode. This helps to reduce the real temperature difference between ceiling and floor so that the unit could run properly. If the height of installation is lower, smaller value could be chosen.

Range: 6°C, 4°C, 2°C, E function (reserved for special customizing)

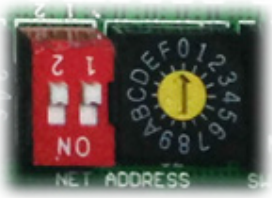

FOR SETTING NETADDRESS				
S1+S2	ON 1 2	ON 1 2	ON 1 2	ON 1 2
CODE	0~F	0~F	0~F	0~F
NETADDRESS	0~15	16~31	32~47	48~63
FACTORY SETTING	✓			

E. Micro-switch S1 and dial-switch S2 are for address setting when you want to control this unit by a central controller.

Range: 00-63



FOR SETTING POWER(DC MOTOR MODEL ONLY)										
ENC1										
CODE	0	1	2	4	5	7	8	9	A	B
POWER	20	26	32~35	36~53	54~71	72~90	91~105	106~140	141~160	161~200
FACTORY SETTING	ACCORDING TO RELATED MODEL.									

F. Dial-switch ENC1: The indoor PCB is universal designed for whole series units from 7K to 68K. This ENC1 setting will tell the main program what size the unit is.

NOTE: Usually there is glue on it because the switch position cannot be changed at random unless you want to use this PCB as a spare part to use in another unit. Then you have to select the right position to match the size of the unit.

“20” means 2kW (7K),“105” means 10.5kW(36K), and so on.

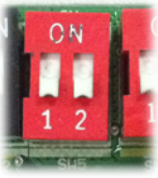

FOR MAIN-SLAVE SETTING				
SW5	ON 1 2	ON 1 2	ON 1 2	ON 1 2
MODE	MAIN NO SLAVE	MAIN	MAIN	SLAVE
FACTORY SETTING	✓			

G. Micro-switch SW5 is for setting the master or slave unit when the unit is in twin connection.

Range: Master no slave (Normal 1 drive 1 connection), Master (2 positions without difference), Slave

Outdoor Unit

Contents

1. Dimensional Drawings 2
2. Service Place 12
3. Capacity Correction Factor for Height Difference 13
4. Noise Criterion Curves 20
5. Refrigerant Cycle Diagrams 23
6. Electrical Wiring Diagrams 26

1. Dimensional Drawings

Please check the corresponding dimensional drawing according to the panel plate.

ODU Model	Panel Plate
MOX230-12HFN8-QRD0W(GA)	X230
MOX330U-18HFN8-QRD0W(GA)	X330
MOX430U-24HFN8-QRD0W(GA)	X430
MOD30U-30HFN8-QRD0W(GA)	D30
MOD30U-36HFN8-QRD0W(GA)	D30
MOD30U-36HFN8-RRD0W(GA)	D30
MOD30U-42HFN8-QRD0W(GA)	D30
MOE30U-48HFN8-RRD0W(GA)	E30
MOE30U-55HFN8-RRD0W(GA)	E30

Panel Plate B30

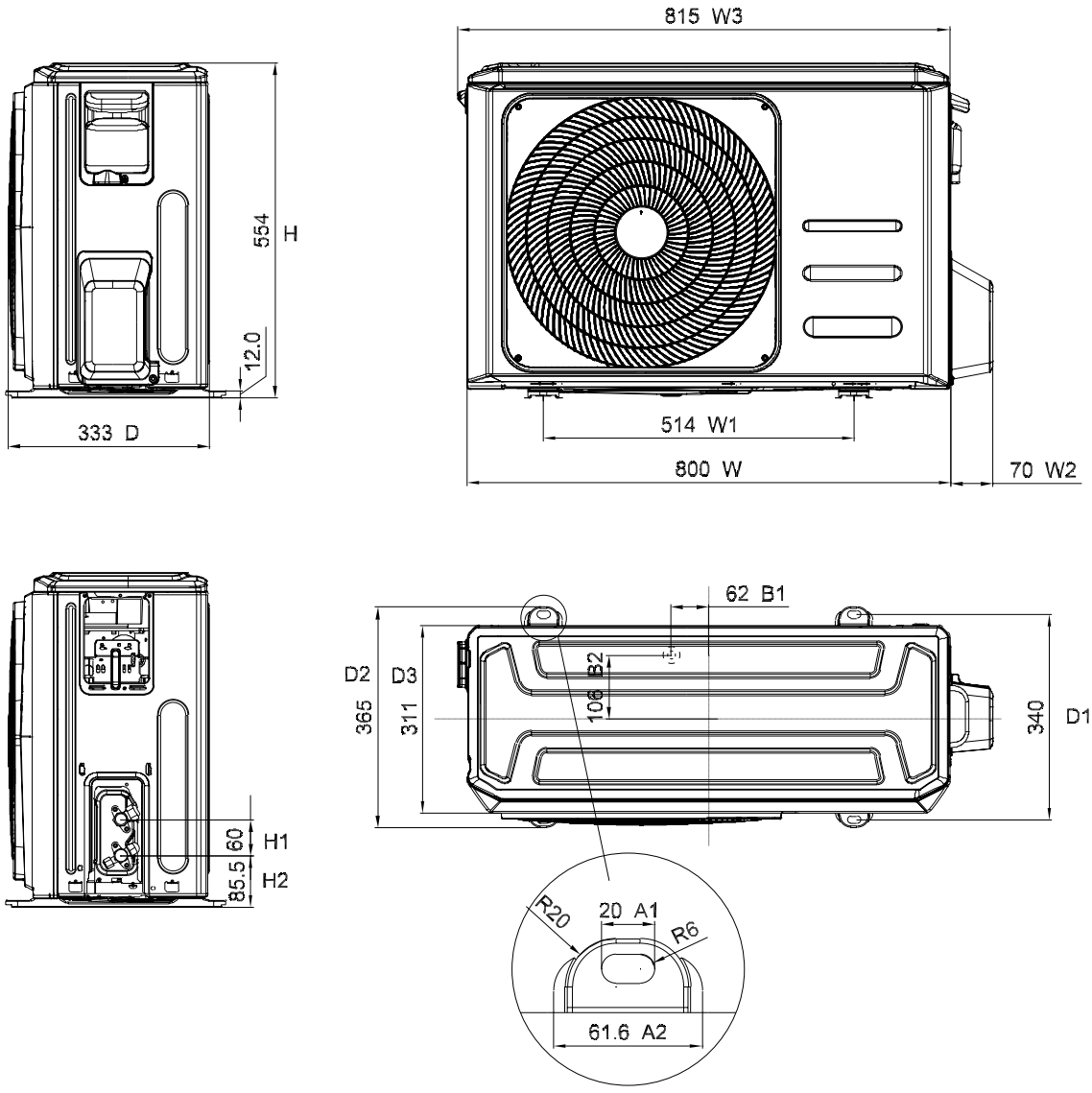

Panel Plate BA30

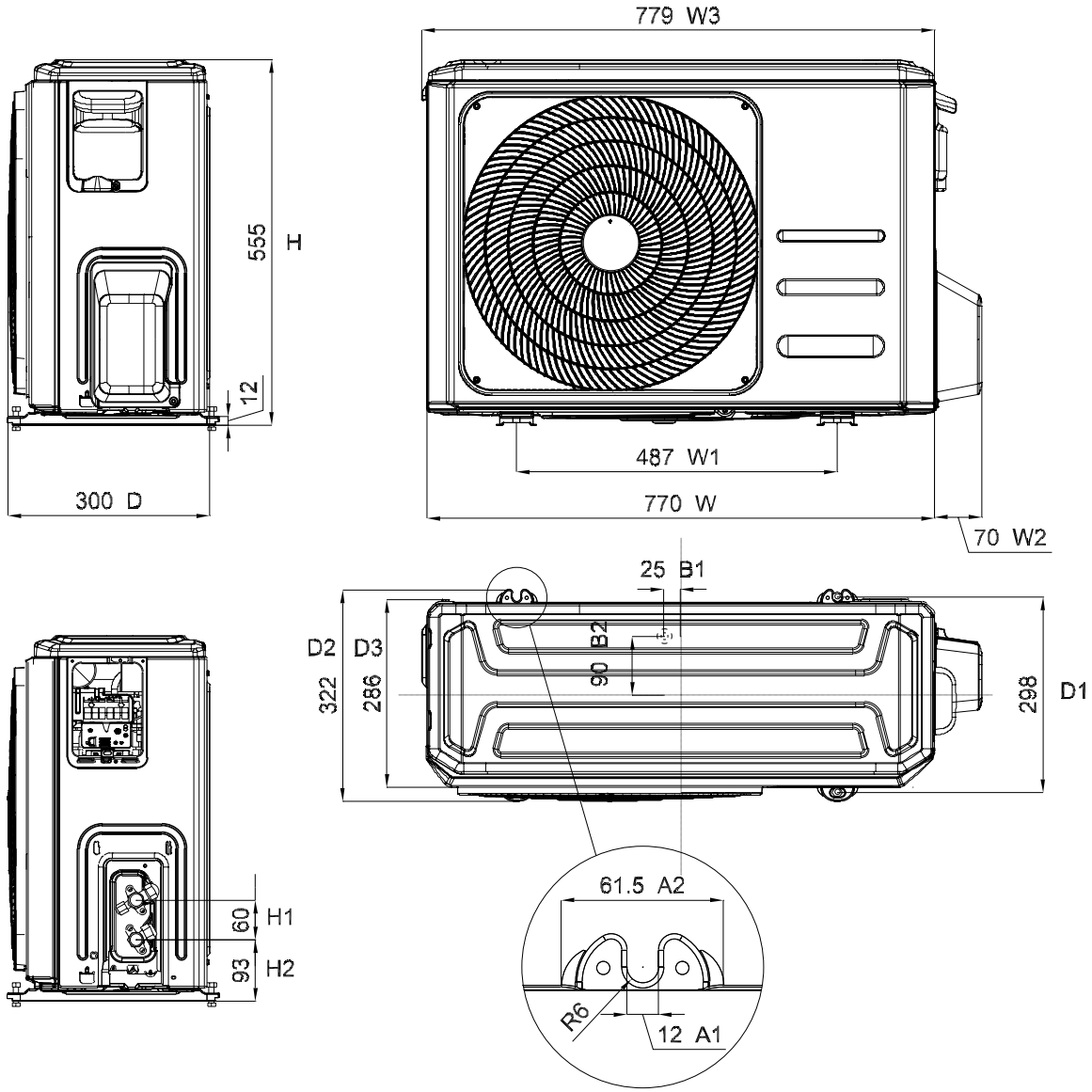

Panel Plate CA30

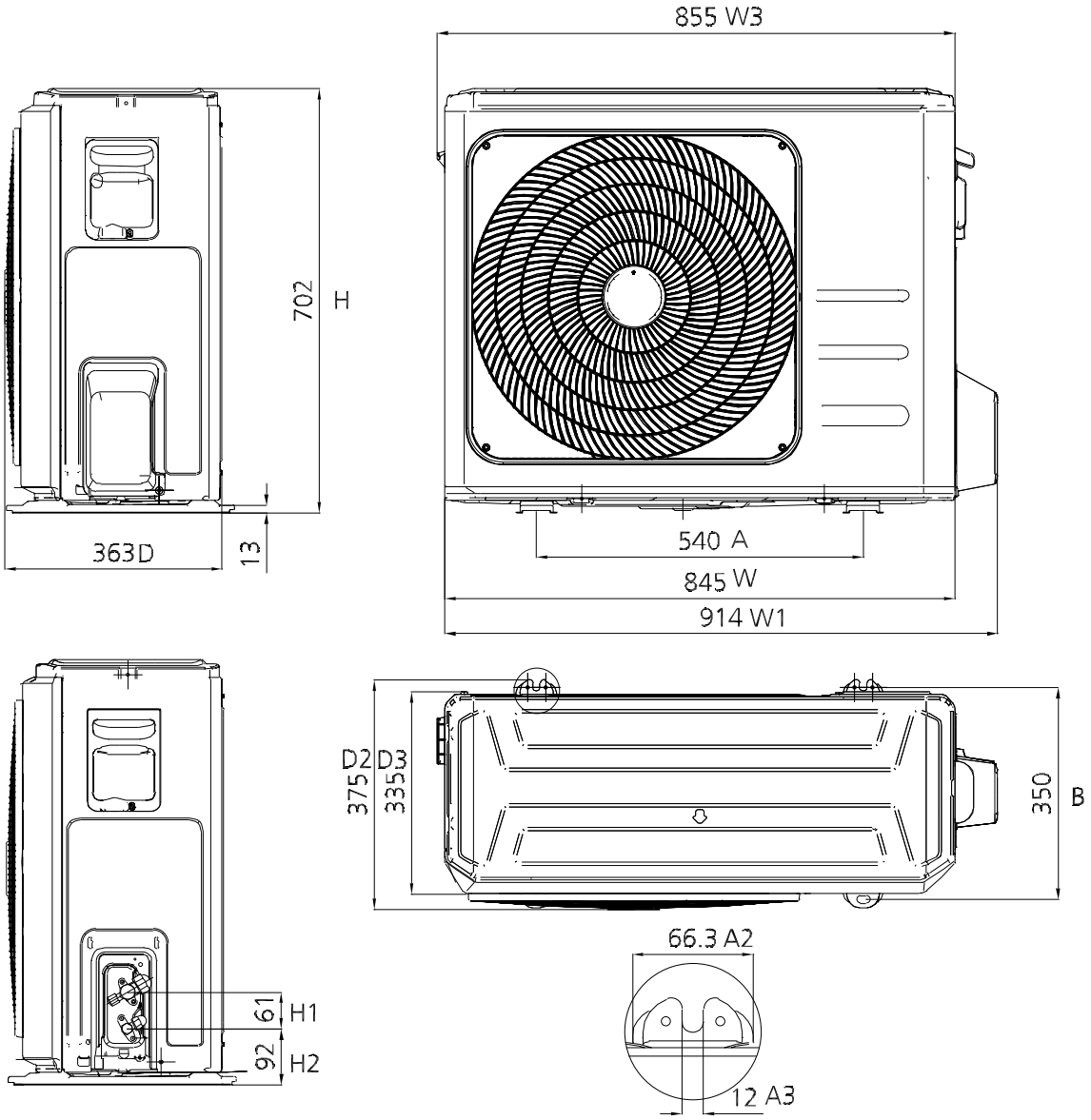

Panel Plate D30

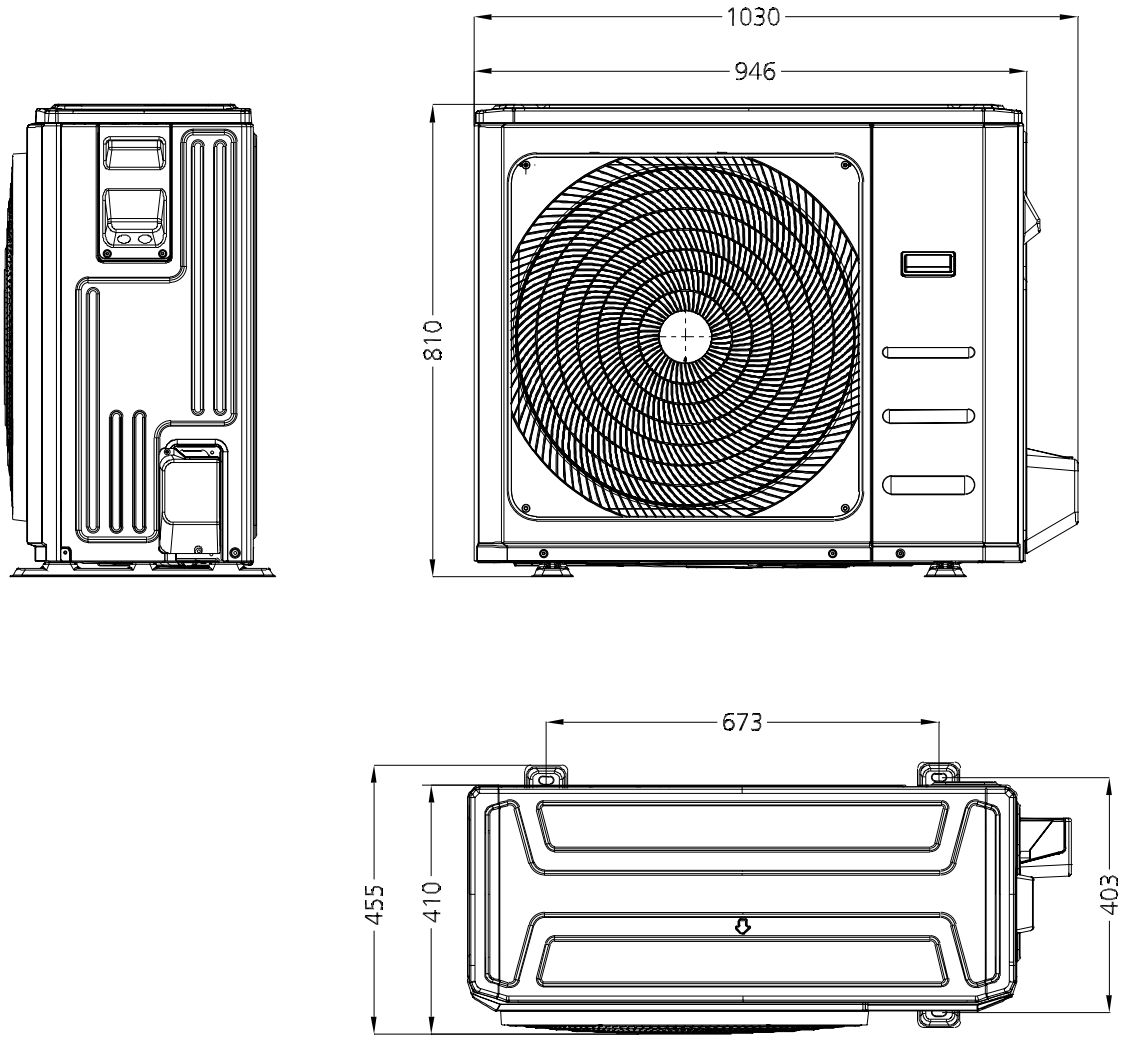

Panel Plate X230

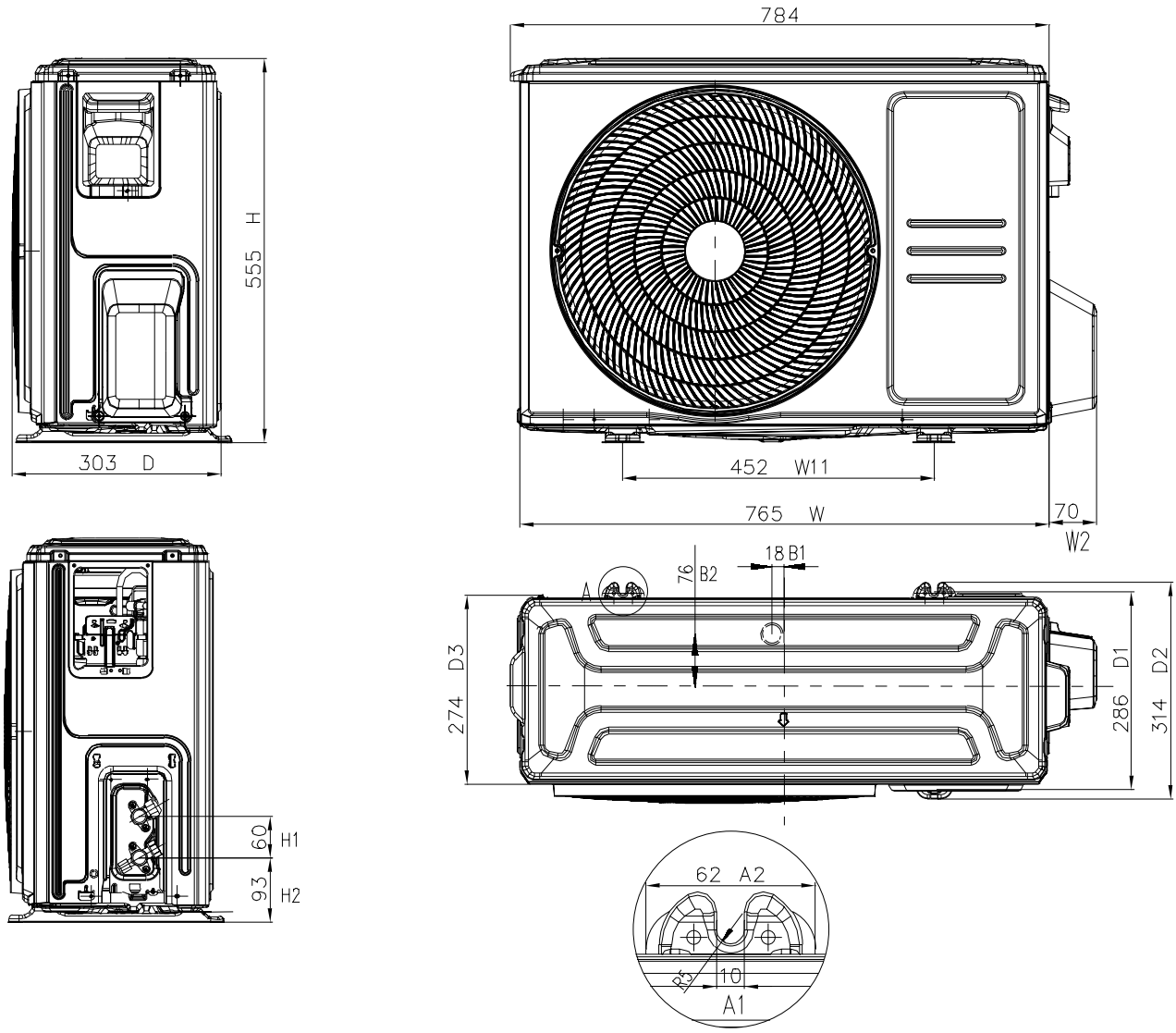

Panel Plate X330

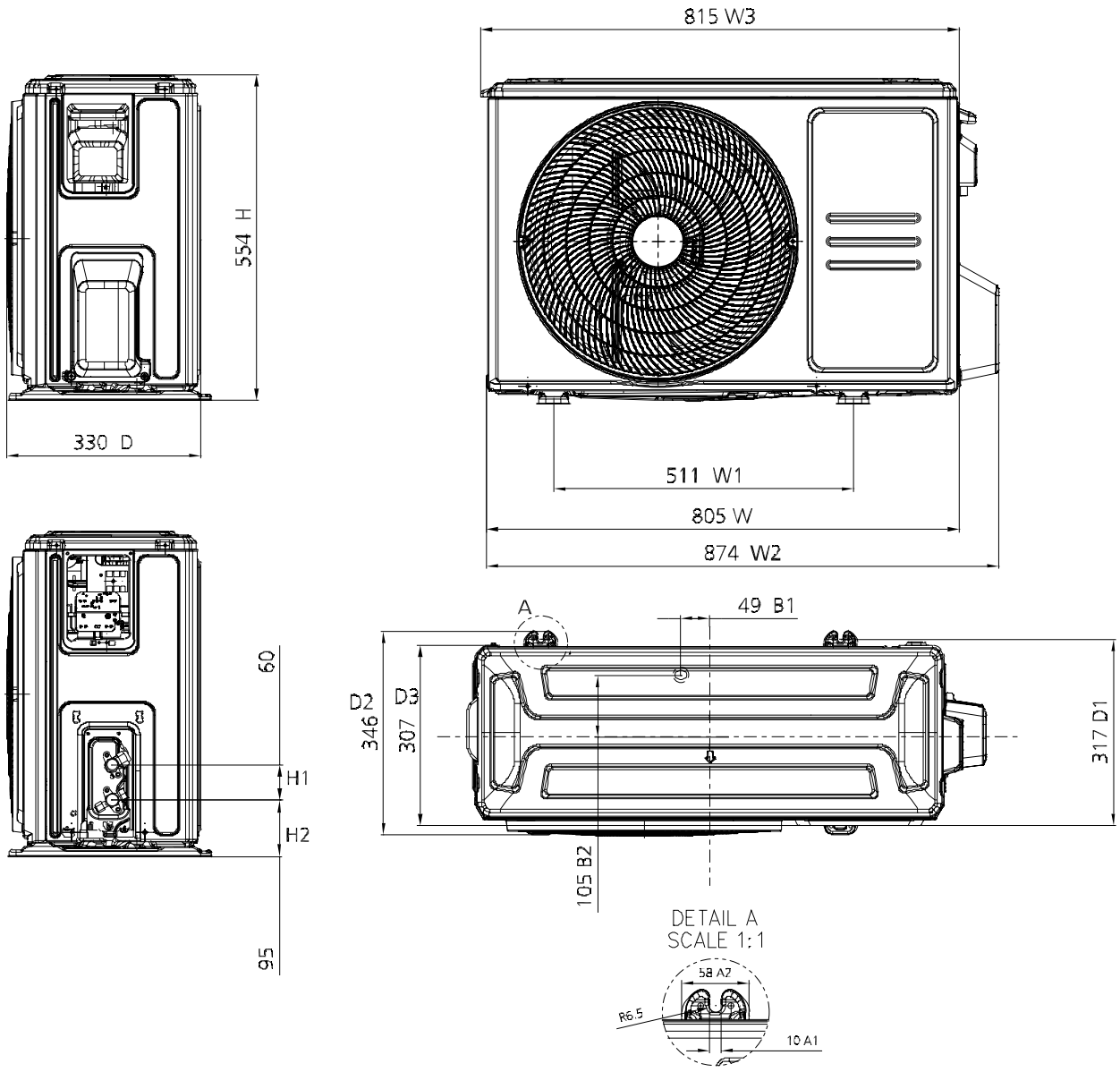

Panel Plate X430

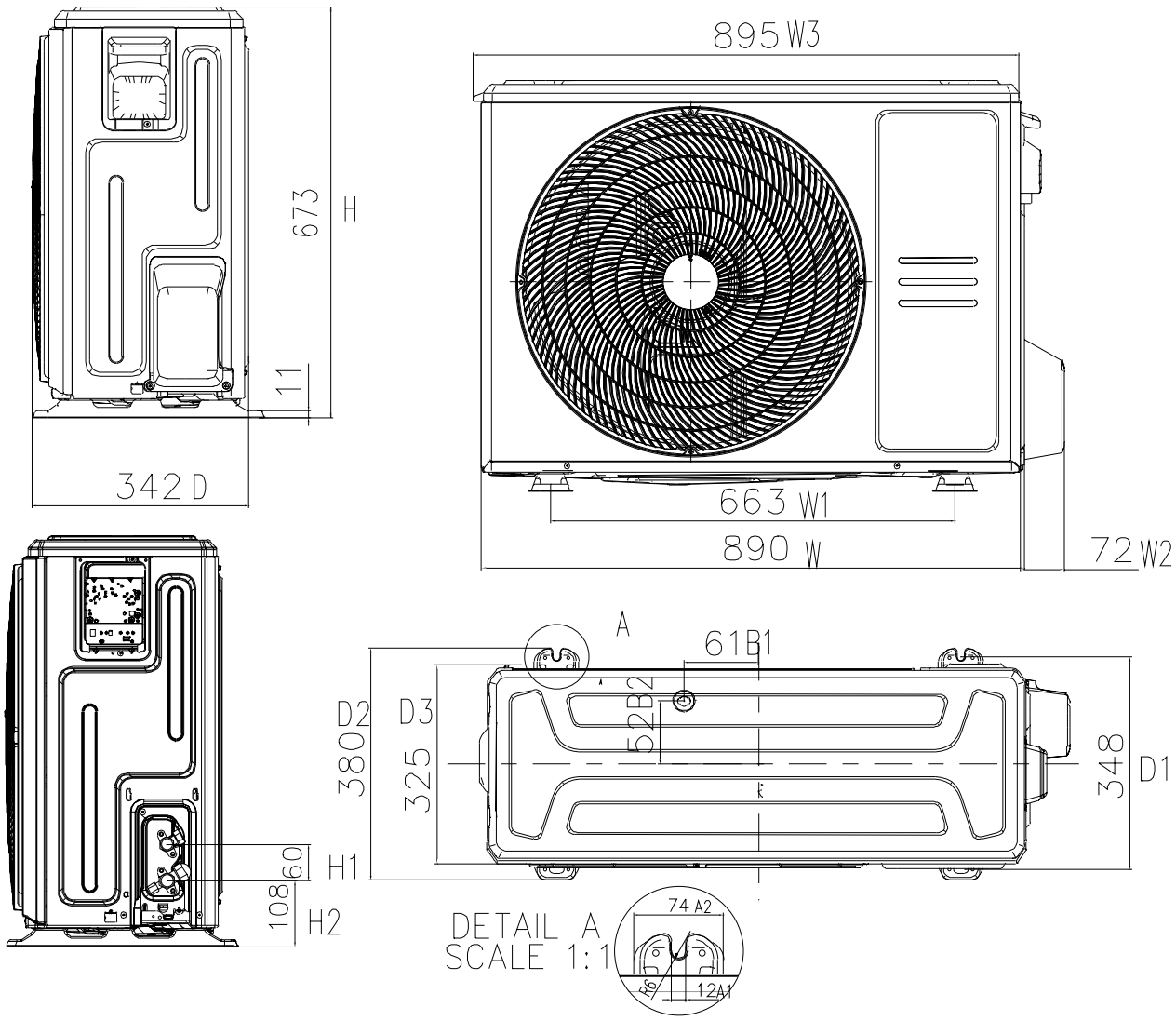

Panel Plate E30

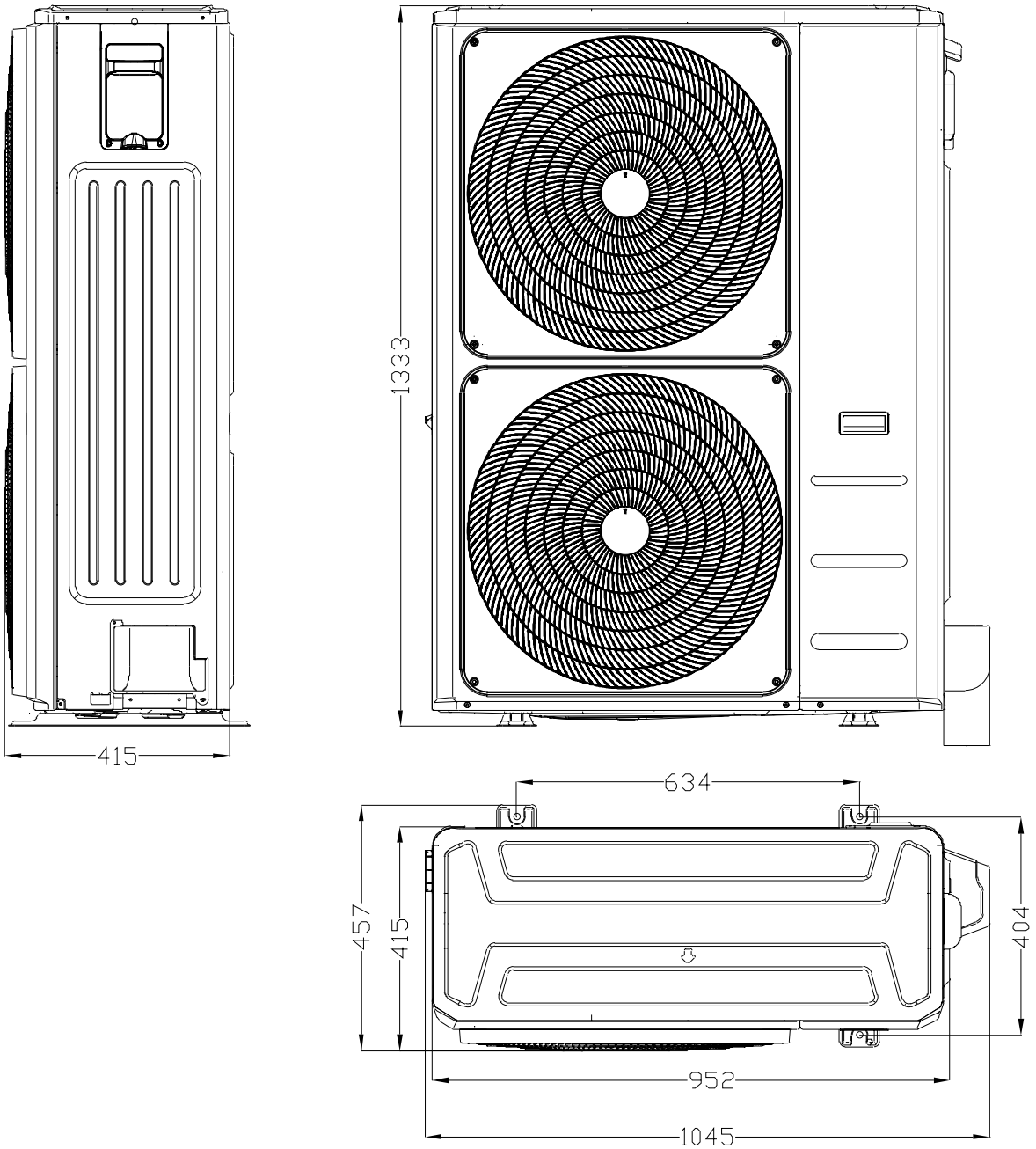

Panel Plate 590

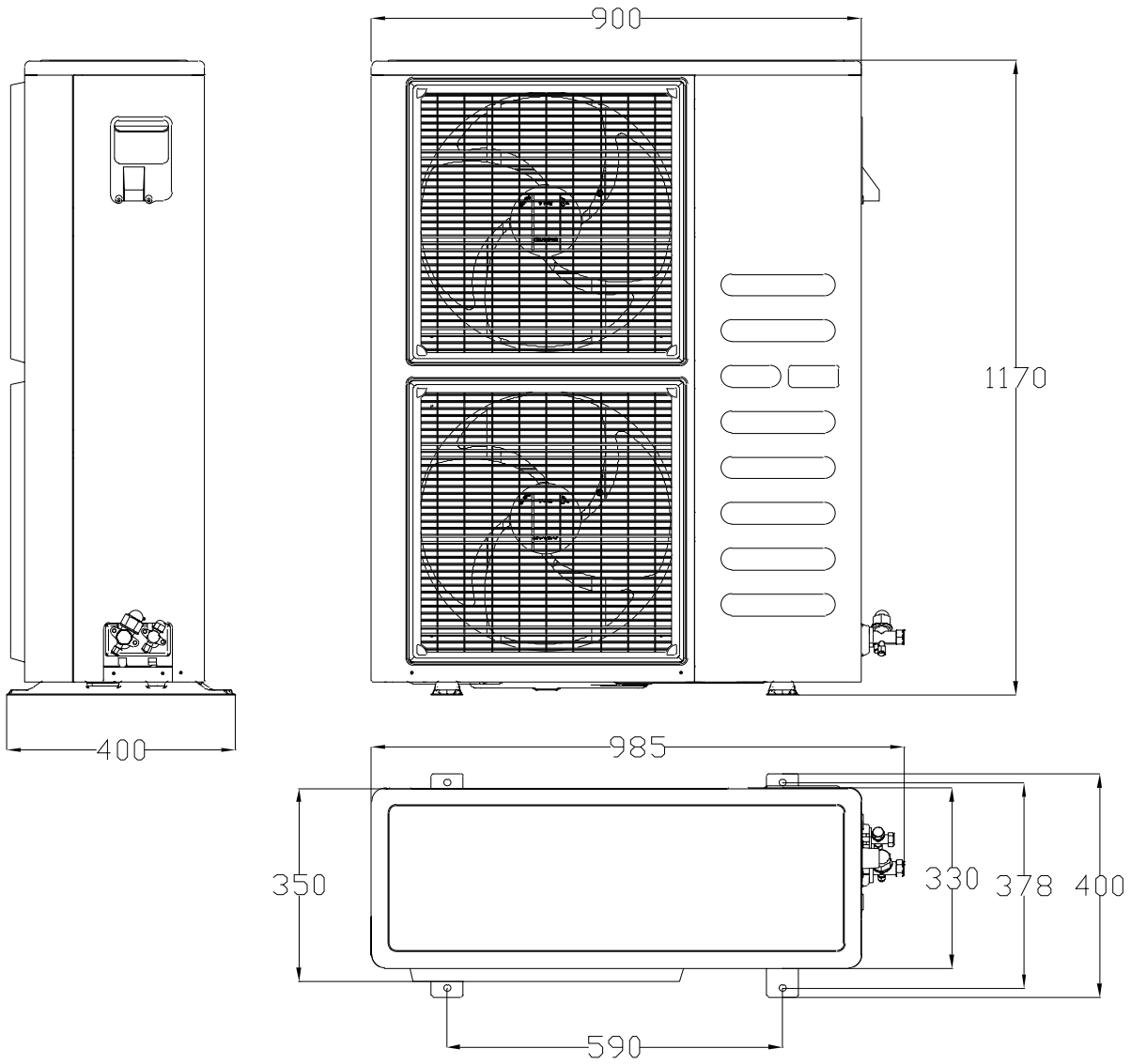

2. Service Place

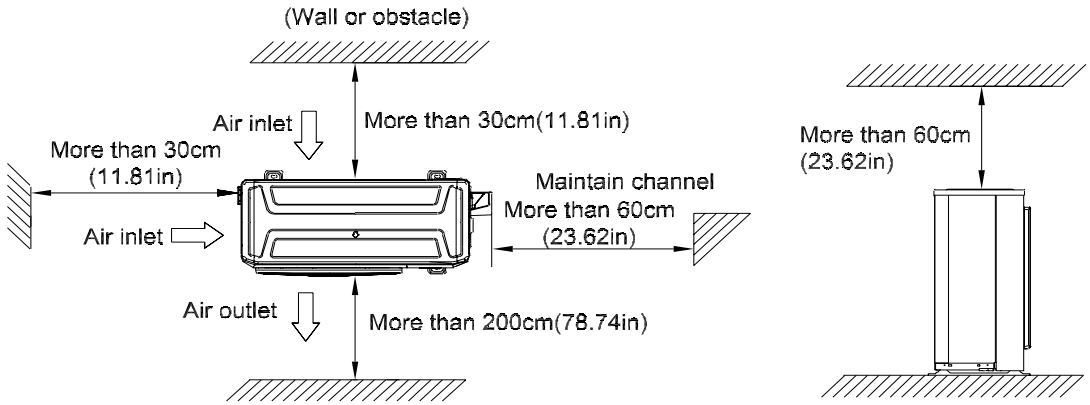

3. Capacity Correction Factor for Height Difference

Capacity(Btu/h)	12k		Pipe Length (m)			
Cooling			5	10	20	25
Height difference H (m)	Indoor Upper than Outdoor	10		0.973	0.948	0.936
		5	0.995	0.983	0.958	0.945
		0	1.000	0.988	0.963	0.950
	Outdoor Upper than Indoor	-5	1.000	0.988	0.963	0.950
		-10		0.988	0.963	0.950
Heating			5	10	15	20
Height difference H (m)	Indoor Upper than Outdoor	10		0.993	0.978	0.970
		5	1.000	0.993	0.978	0.970
		0	1.000	0.993	0.978	0.970
	Outdoor Upper than Indoor	-5	0.992	0.985	0.970	0.962
		-10		0.977	0.962	0.955

Capacity(Btu/h)	18k		Pipe Length (m)			
Cooling			5	10	20	30
Height difference H (m)	Indoor Upper than Outdoor	20			0.928	0.912
		10		0.969	0.937	0.921
		5	0.995	0.979	0.946	0.930
		0	1.000	0.984	0.951	0.935
	Outdoor Upper than Indoor	-5	1.000	0.984	0.951	0.935
		-10		0.984	0.951	0.935
		-20			0.951	0.935
Heating			5	10	20	30
Height difference H (m)	Indoor Upper than Outdoor	20			0.982	0.976
		10		0.994	0.982	0.976
		5	1.000	0.994	0.982	0.976
		0	1.000	0.994	0.982	0.976
	Outdoor Upper than Indoor	-5	0.992	0.986	0.974	0.968
		-10		0.978	0.966	0.960
		-20			0.959	0.953

Capacity (Btu/h)	24k		Pipe Length (m)					
Cooling			5	10	20	30	40	50
Height difference H (m)	Indoor Upper than Outdoor	25				0.914	0.894	0.874
		20			0.944	0.924	0.903	0.883
		10		0.975	0.954	0.933	0.912	0.891
		5	0.995	0.984	0.963	0.942	0.921	0.900
		0	1.000	0.989	0.968	0.947	0.926	0.905
	Outdoor Upper than Indoor	-5	1.000	0.989	0.968	0.947	0.926	0.905
		-10		0.989	0.968	0.947	0.926	0.905
		-20			0.968	0.947	0.926	0.905
		-25				0.947	0.926	0.905
Heating			5	10	20	30	40	50
Height difference H (m)	Indoor Upper than Outdoor	25				0.983	0.977	0.970
		20			0.990	0.983	0.977	0.970
		10		0.997	0.990	0.983	0.977	0.970
		5	1.000	0.997	0.990	0.983	0.977	0.970
		0	1.000	0.997	0.990	0.983	0.977	0.970
	Outdoor Upper than Indoor	-5	0.992	0.989	0.982	0.975	0.969	0.962
		-10		0.981	0.974	0.968	0.961	0.955
		-20			0.966	0.960	0.953	0.947
		-25				0.952	0.946	0.939

Capacity (Btu/h)	30k		Pipe Length (m)					
Cooling			5	10	20	30	40	50
Height difference H (m)	Indoor Upper than Outdoor	25				0.887	0.856	0.824
		20			0.928	0.896	0.864	0.833
		10		0.969	0.937	0.905	0.873	0.841
		5	0.995	0.979	0.947	0.914	0.882	0.850
		0	1.000	0.984	0.951	0.919	0.886	0.854
	Outdoor Upper than Indoor	-5	1.000	0.984	0.951	0.919	0.886	0.854
		-10		0.984	0.951	0.919	0.886	0.854
		-20			0.951	0.919	0.886	0.854
		-25				0.919	0.886	0.854
Heating			5	10	20	30	40	50
Height difference H (m)	Indoor Upper than Outdoor	25				0.958	0.942	0.925
		20			0.975	0.958	0.942	0.925
		10		0.992	0.975	0.958	0.942	0.925
		5	1.000	0.992	0.975	0.958	0.942	0.925
		0	1.000	0.992	0.975	0.958	0.942	0.925
	Outdoor Upper than Indoor	-5	0.992	0.984	0.967	0.951	0.934	0.918
		-10		0.976	0.959	0.943	0.927	0.910
		-20			0.952	0.936	0.919	0.903
		-25				0.928	0.912	0.896

Capacity (Btu/h)	36k		Pipe Length (m)						
Cooling			5	15	25	35	50	65	75
Height difference H (m)	Indoor Upper than Outdoor	30				0.885	0.845	0.805	0.778
		20			0.921	0.894	0.854	0.813	0.786
		10		0.958	0.931	0.903	0.862	0.822	0.794
		5	0.995	0.967	0.940	0.912	0.871	0.830	0.802
		0	1.000	0.972	0.945	0.917	0.876	0.834	0.806
	Outdoor Upper than Indoor	-5	1.000	0.972	0.945	0.917	0.876	0.834	0.806
		-10		0.972	0.945	0.917	0.876	0.834	0.806
		-20			0.945	0.917	0.876	0.834	0.806
		-30				0.917	0.876	0.834	0.806
Heating			5	15	25	35	50	65	75
Height difference H (m)	Indoor Upper than Outdoor	30				0.962	0.943	0.924	0.911
		20			0.975	0.962	0.943	0.924	0.911
		10		0.987	0.975	0.962	0.943	0.924	0.911
		5	1.000	0.987	0.975	0.962	0.943	0.924	0.911
		0	1.000	0.987	0.975	0.962	0.943	0.924	0.911
	Outdoor Upper than Indoor	-5	0.992	0.979	0.967	0.954	0.935	0.917	0.904
		-10		0.972	0.959	0.947	0.928	0.909	0.896
		-20			0.951	0.939	0.921	0.902	0.889
		-30				0.932	0.913	0.895	0.882

Capacity (Btu/h)	42k		Pipe Length (m)						
Cooling			5	15	25	35	50	65	75
Height difference H (m)	Indoor Upper than Outdoor	30				0.881	0.839	0.797	0.769
		20			0.919	0.890	0.848	0.806	0.777
		10		0.956	0.928	0.899	0.857	0.814	0.785
		5	0.995	0.966	0.937	0.908	0.865	0.822	0.793
		0	1.000	0.971	0.942	0.913	0.870	0.826	0.797
	Outdoor Upper than Indoor	-5	1.000	0.971	0.942	0.913	0.870	0.826	0.797
		-10		0.971	0.942	0.913	0.870	0.826	0.797
		-20			0.942	0.913	0.870	0.826	0.797
		-30				0.913	0.870	0.826	0.797
Heating			5	15	25	35	50	65	75
Height difference H (m)	Indoor Upper than Outdoor	30				0.960	0.940	0.920	0.907
		20			0.973	0.960	0.940	0.920	0.907
		10		0.987	0.973	0.960	0.940	0.920	0.907
		5	1.000	0.987	0.973	0.960	0.940	0.920	0.907
		0	1.000	0.987	0.973	0.960	0.940	0.920	0.907
	Outdoor Upper than Indoor	-5	0.992	0.979	0.966	0.952	0.932	0.913	0.900
		-10		0.971	0.958	0.945	0.925	0.905	0.893
		-20			0.950	0.937	0.918	0.898	0.885
		-30				0.930	0.910	0.891	0.878

Capacity (Btu/h)	48k		Pipe Length (m)						
Cooling			5	15	25	35	50	65	75
Height difference H (m)	Indoor Upper than Outdoor	30				0.880	0.838	0.796	0.768
		20			0.918	0.889	0.846	0.804	0.775
		10		0.956	0.927	0.898	0.855	0.812	0.783
		5	0.995	0.966	0.937	0.907	0.864	0.820	0.791
		0	1.000	0.971	0.941	0.912	0.868	0.824	0.795
	Outdoor Upper than Indoor	-5	1.000	0.971	0.941	0.912	0.868	0.824	0.795
		-10		0.971	0.941	0.912	0.868	0.824	0.795
		-20			0.941	0.912	0.868	0.824	0.795
		-30				0.912	0.868	0.824	0.795
Heating			5	15	25	35	50	65	75
Height difference H (m)	Indoor Upper than Outdoor	30				0.956	0.933	0.911	0.896
		20			0.970	0.956	0.933	0.911	0.896
		10		0.985	0.970	0.956	0.933	0.911	0.896
		5	1.000	0.985	0.970	0.956	0.933	0.911	0.896
		0	1.000	0.985	0.970	0.956	0.933	0.911	0.896
	Outdoor Upper than Indoor	-5	0.992	0.977	0.963	0.948	0.926	0.904	0.889
		-10		0.969	0.955	0.940	0.918	0.896	0.882
		-20			0.947	0.933	0.911	0.889	0.875
		-30				0.925	0.904	0.882	0.868

Capacity (Btu/h)	55k		Pipe Length (m)						
Cooling			5	15	25	35	50	65	75
Height difference H (m)	Indoor Upper than Outdoor	30				0.866	0.816	0.767	0.734
		20			0.908	0.875	0.825	0.774	0.741
		10		0.951	0.917	0.884	0.833	0.782	0.749
		5	0.995	0.961	0.927	0.893	0.841	0.790	0.756
		0	1.000	0.966	0.931	0.897	0.846	0.794	0.760
	Outdoor Upper than Indoor	-5	1.000	0.966	0.931	0.897	0.846	0.794	0.760
		-10		0.966	0.931	0.897	0.846	0.794	0.760
		-20			0.931	0.897	0.846	0.794	0.760
		-30				0.897	0.846	0.794	0.760
Heating			5	15	25	35	50	65	75
Height difference H (m)	Indoor Upper than Outdoor	30				0.953	0.929	0.905	0.889
		20			0.968	0.953	0.929	0.905	0.889
		10		0.984	0.968	0.953	0.929	0.905	0.889
		5	1.000	0.984	0.968	0.953	0.929	0.905	0.889
		0	1.000	0.984	0.968	0.953	0.929	0.905	0.889
	Outdoor Upper than Indoor	-5	0.992	0.976	0.961	0.945	0.921	0.898	0.882
		-10		0.968	0.953	0.937	0.914	0.891	0.875
		-20			0.945	0.930	0.907	0.883	0.868
		-30				0.922	0.899	0.876	0.861

4. Noise Criterion Curves

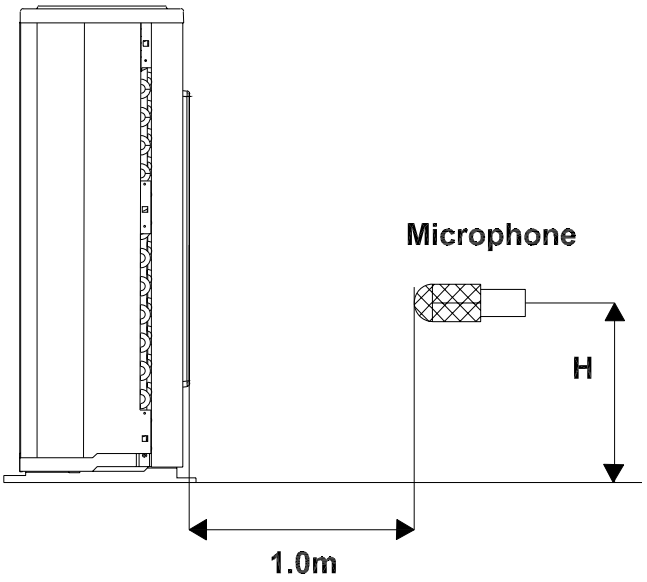

Note: H= 0.5 × height of outdoor unit

Notes:

-Sound measured at 1.0m away from the center of the unit.

-Data is valid at free field condition

-Data is valid at nominal operation condition

-Reference acoustic pressure OdB=20μPa

-Sound level will vary depending on arrange off actors such as the construction (acoustic absorption coefficient) of particular room in which the equipment is installed.

-The operating conditions are assumed to be standard.

MOX230-12HFN8-QRD0W(GA)

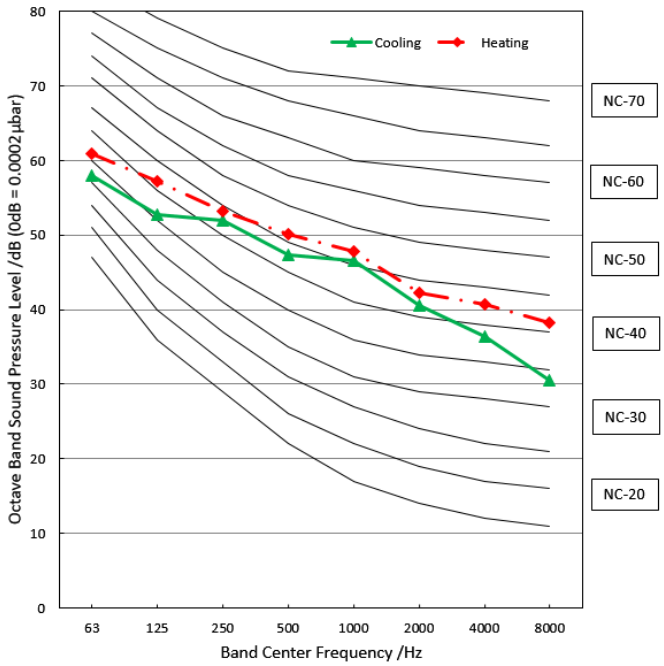

MOX330U-18HFN8-QRD0W(GA)

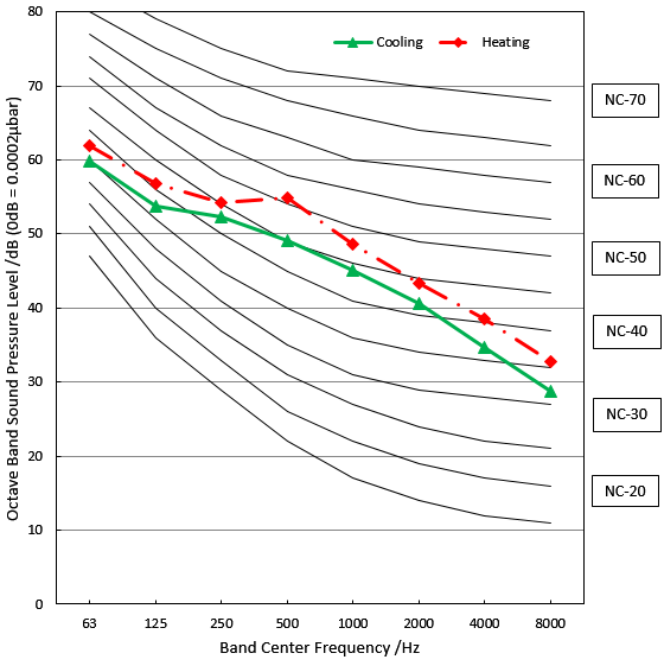

MOX430U-24HFN8-QRD0W(GA)

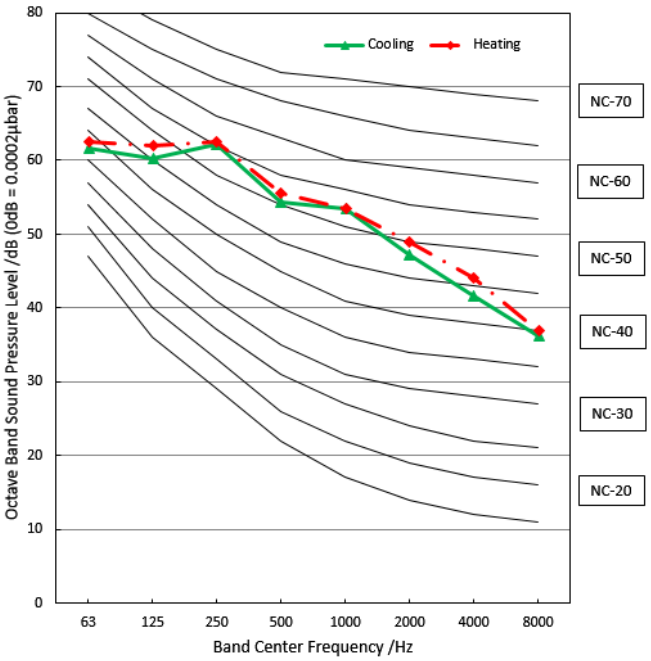

MOD30U-30HFN8-QRD0W(GA)

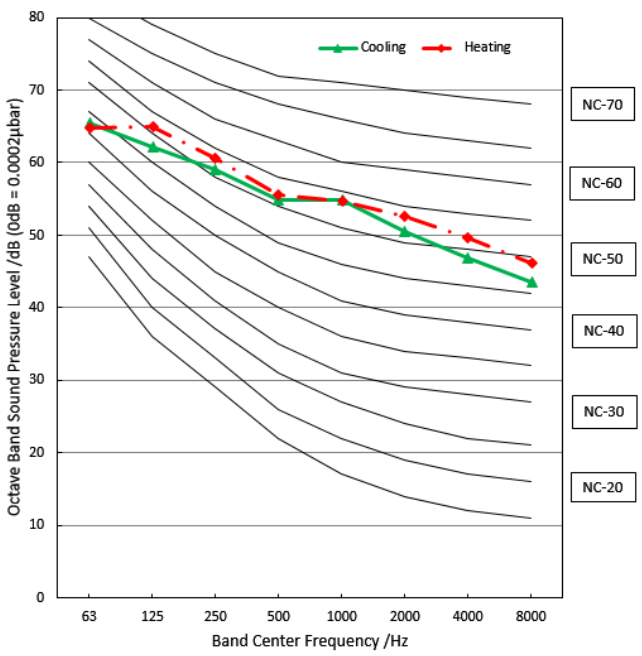

MOD30U-36HFN8-QRD0W(GA)

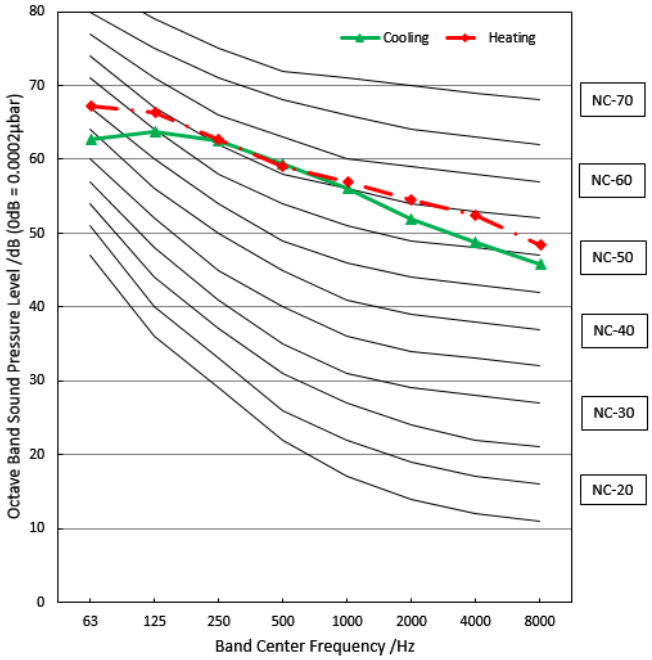

MOD30U-36HFN8-RRD0W(GA)

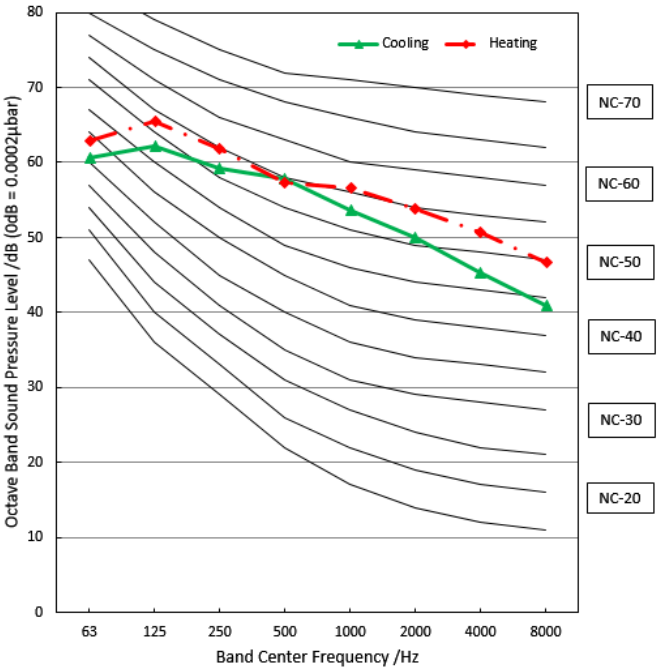

MOD30U-42HFN8-QRD0W(GA)

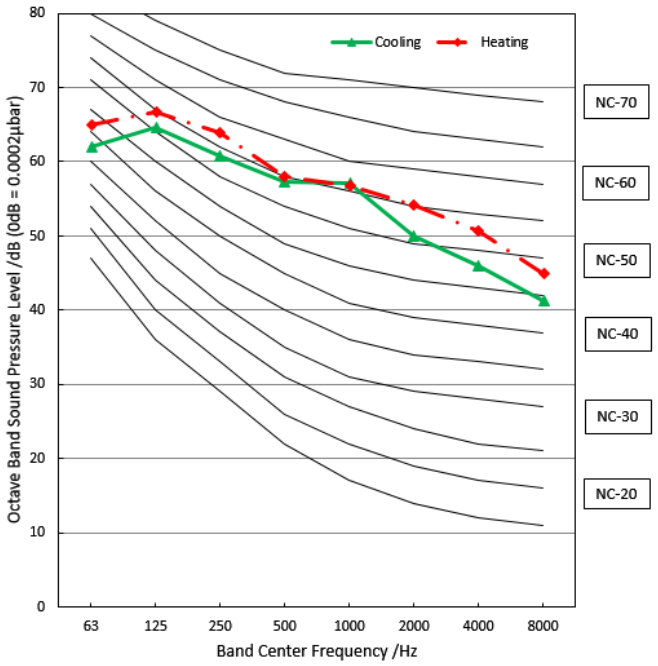

MOE30U-48HFN8-RRD0W(GA)

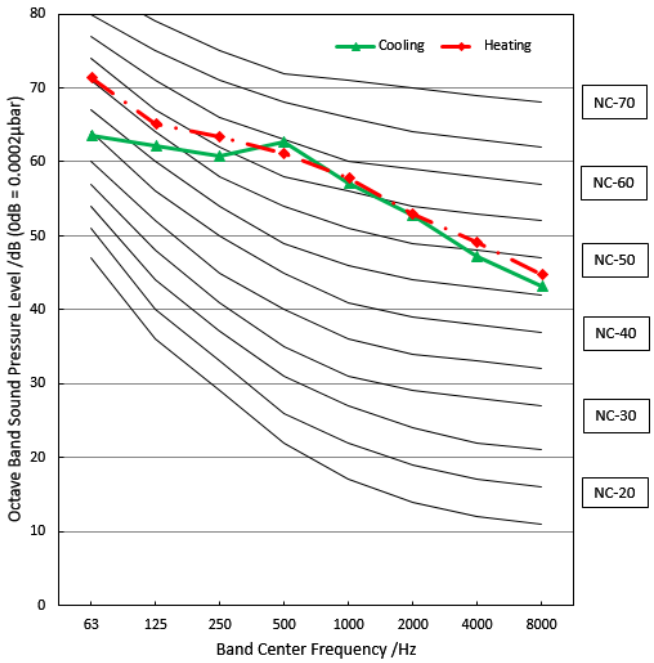

MOE30U-55HFN8-RRD0W(GA)

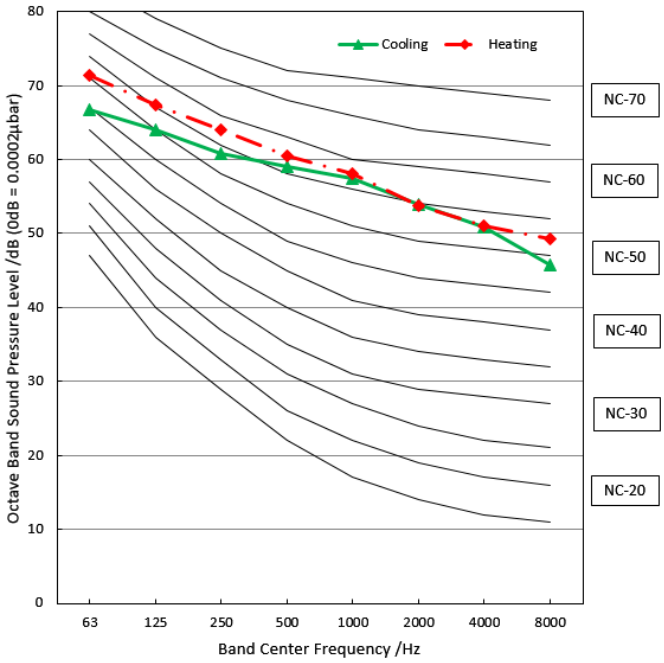

5. Refrigerant Cycle Diagrams

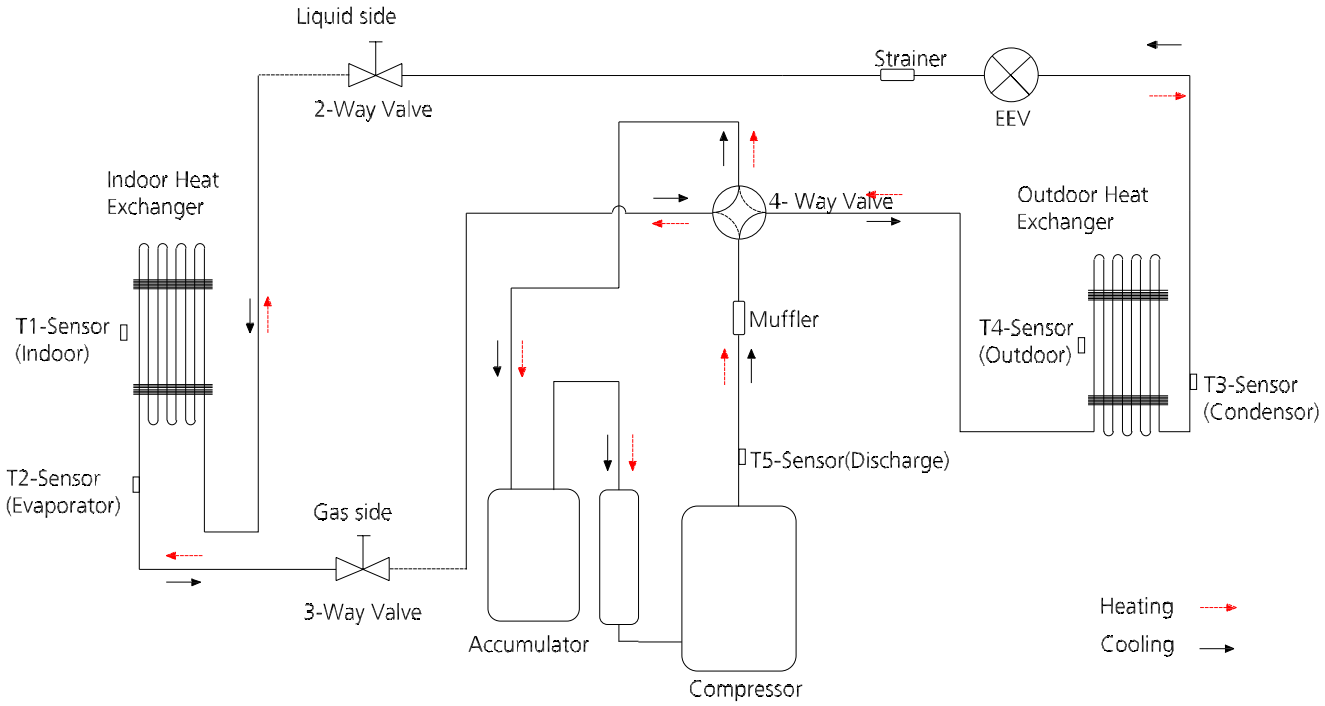

Model	Pipe Size (Diameter:ø) mm(inch)		Piping length (m/ft)		Elevation (m/ft)		Additional Refrigerant
	Gas	Liquid	Rated	Max.	Rated	Max.	
MOX230-12HFN8-QRD0W(GA)	9.52(3/8)	6.35(1/4)	5/16.4	25/82	0	10/32.8	12g/m (0.13oz/ft)
MOX330U-18HFN8-QRD0W(GA)	12.7(1/2)	6.35(1/4)	5/16.4	30/98.4	0	20/65.6	

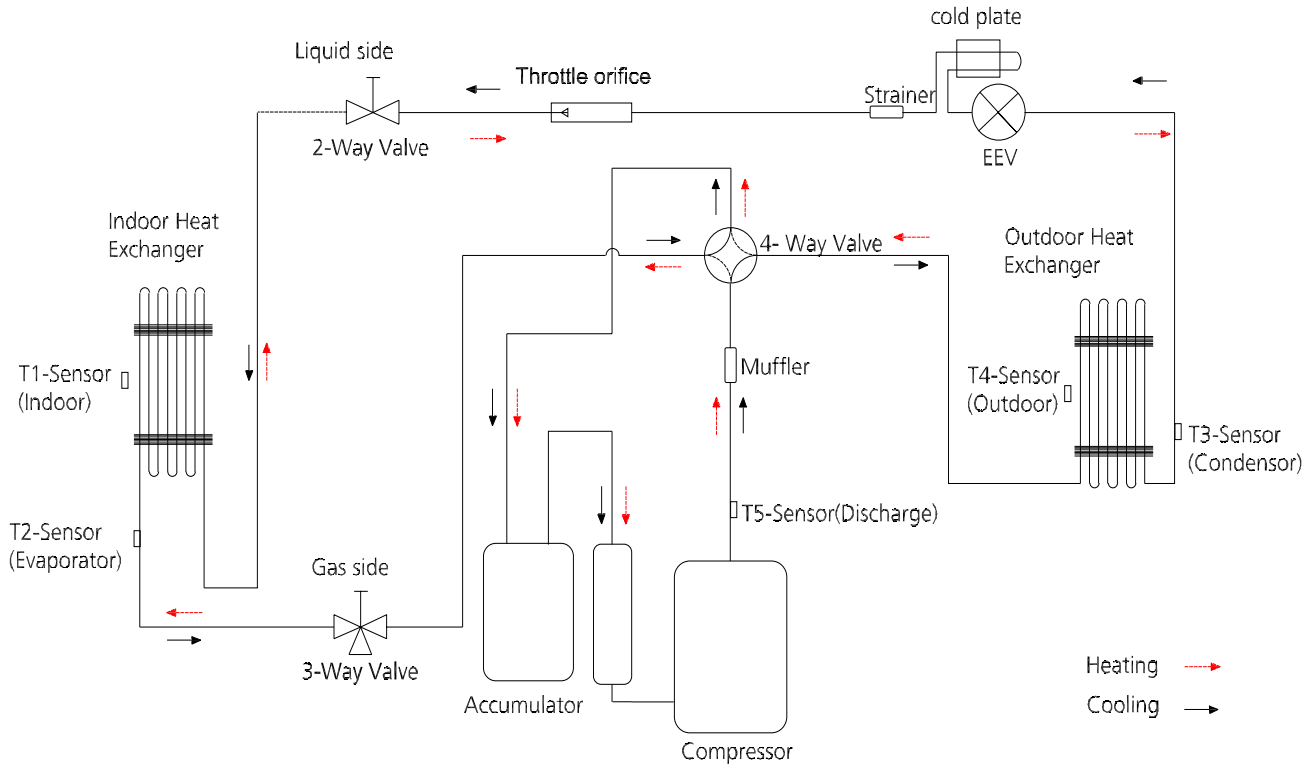

Model	Pipe Size (Diameter:ø) mm(inch)		Piping length (m/ft)		Elevation (m/ft)		Additional Refrigerant
	Gas	Liquid	Rated	Max.	Rated	Max.	
MOX430U-24HFN8-QRD0W(GA)	15.9(5/8)	9.52(3/8)	5/16.4	50/164	0	25/82	24g/m (0.26oz/ft)
MOD30U-30HFN8-QRD0W(GA)	15.9(5/8)	9.52(3/8)	5/16.4	50/164	0	25/82	

There is no accumulator for model MOD30U-30HFN8-QRD0W(GA).

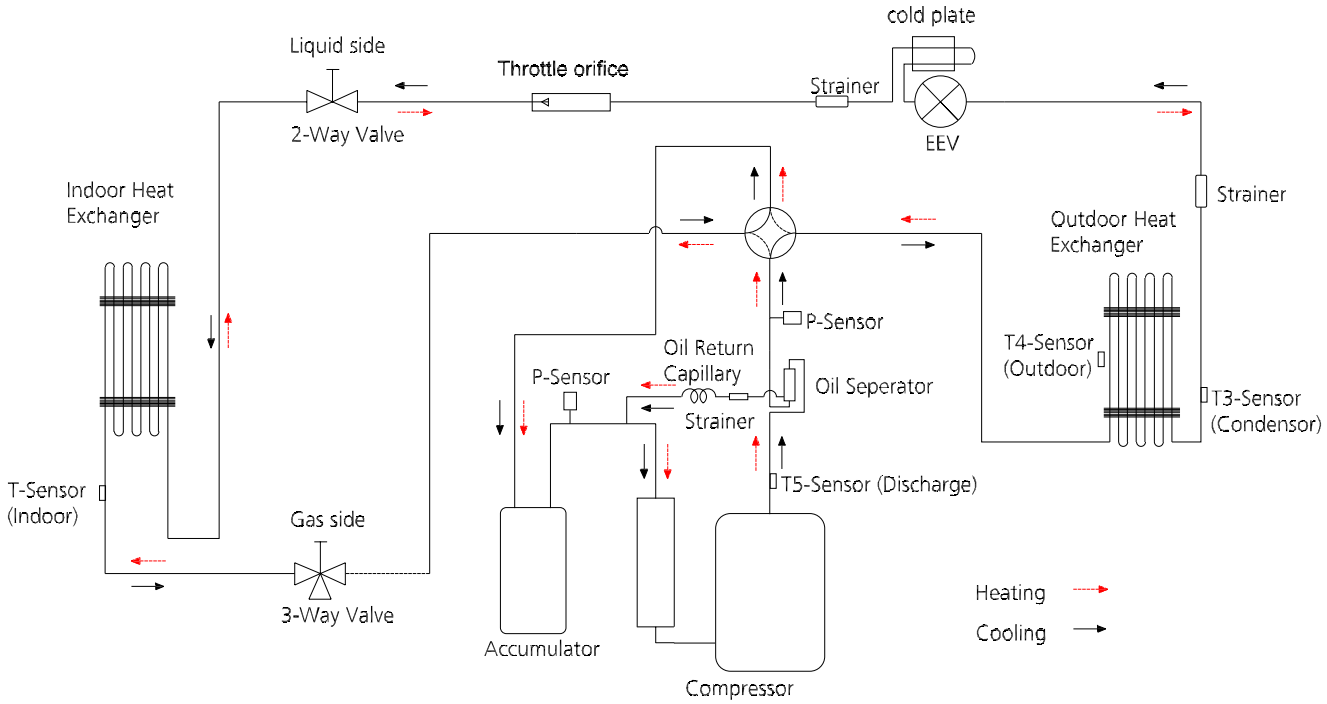

Model	Pipe Size (Diameter:ø) mm(inch)		Piping length (m/ft)		Elevation (m/ft)		Additional Refrigerant
	Gas	Liquid	Rated	Max.	Rated	Max.	
MOD30U-36HFN8-QRD0W(GA)	15.9(5/8)	9.52(3/8)	5/16.4	75/246.1	0	30/98.4	24g/m (0.26oz/ft)
MOD30U-36HFN8-RRD0W(GA)	15.9(5/8)	9.52(3/8)					
MOD30U-42HFN8-QRD0W(GA)	15.9(5/8)	9.52(3/8)					
MOE30U-48HFN8-RRD0W(GA)	15.9(5/8)	9.52(3/8)					
MOE30U-55HFN8-RRD0W(GA)	15.9(5/8)	9.52(3/8)					

6. Electrical Wiring Diagrams

ODU Model	ODU Wiring Diagram	ODU Main Printed Circuit Board	ODU IPM Printed Circuit Board
MOX230-12HFN8-QRD0W(GA)	16022000022493	17122000048121	/
MOX330U-18HFN8-QRD0W(GA)		17122000048121	/
MOX430U-24HFN8-QRD0W(GA)	16022000020613	17122000048064	/
MOD30U-30HFN8-QRD0W(GA)		17122000048064	/
MOD30U-36HFN8-QRD0W(GA)	16022000035289	17122000047742	/
MOD30U-36HFN8-RRD0W(GA)	16022000033470	17122000041841	17122000008625
MOD30U-42HFN8-QRD0W(GA)	16022000035289	17122000047742	/
MOE30U-48HFN8-RRD0W(GA)	16022000033470	17122000041841	17122000021912
MOE30U-55HFN8-RRD0W(GA)		17122000041841	17122000021912

Outdoor unit wiring diagram: 16022000022493

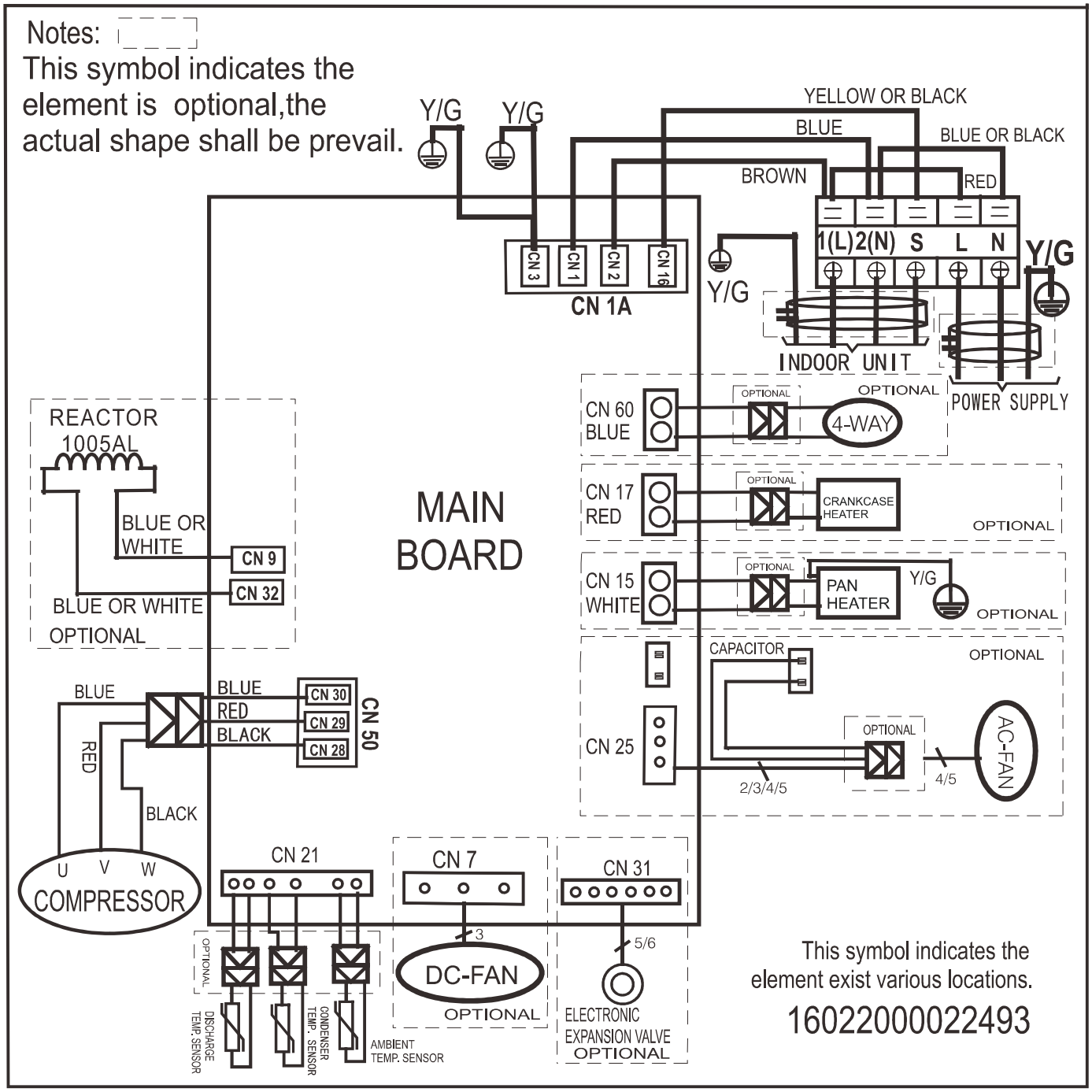

Outdoor unit wiring diagram: 16022000020613

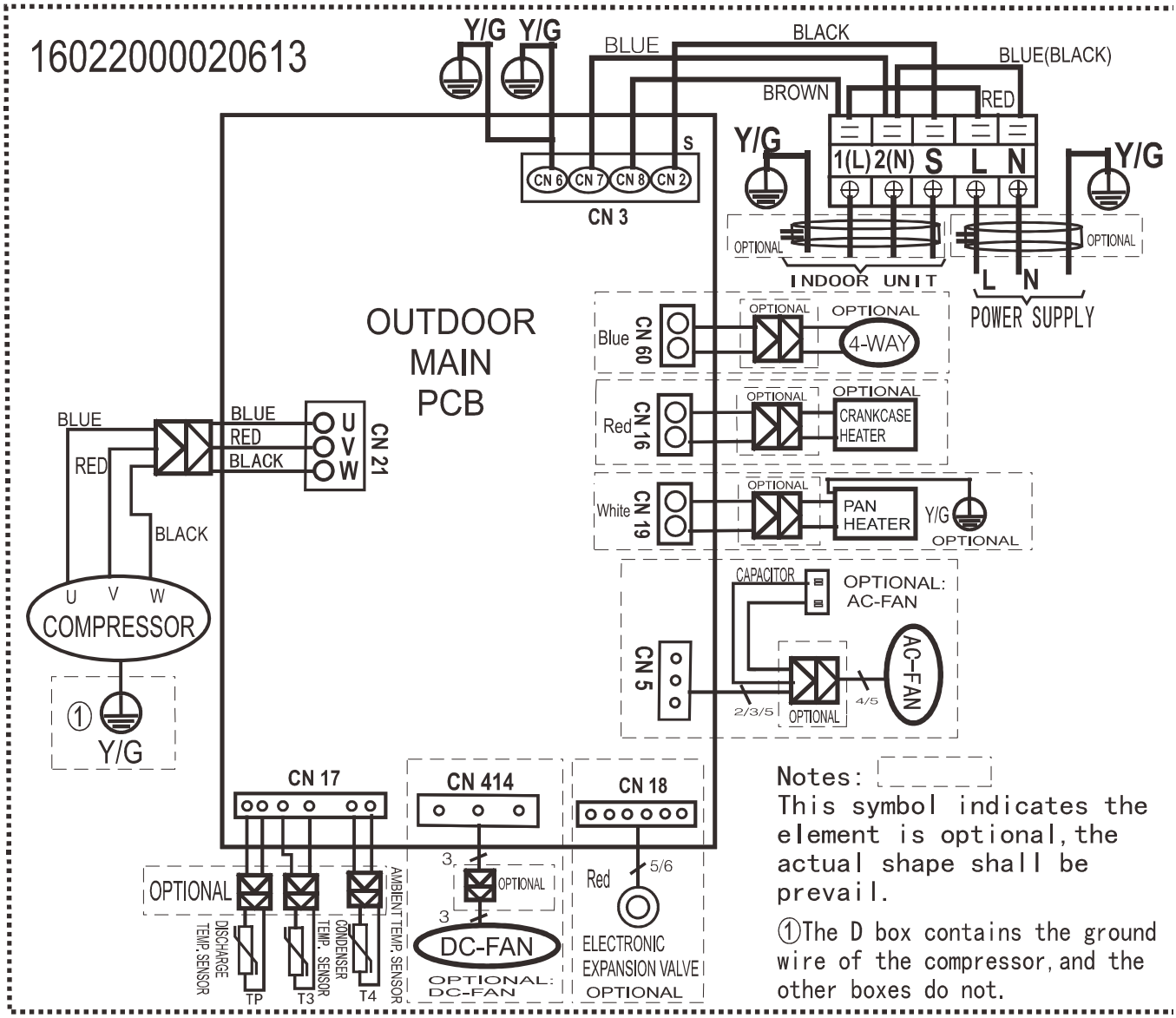

Outdoor unit wiring diagram: 16022000035289

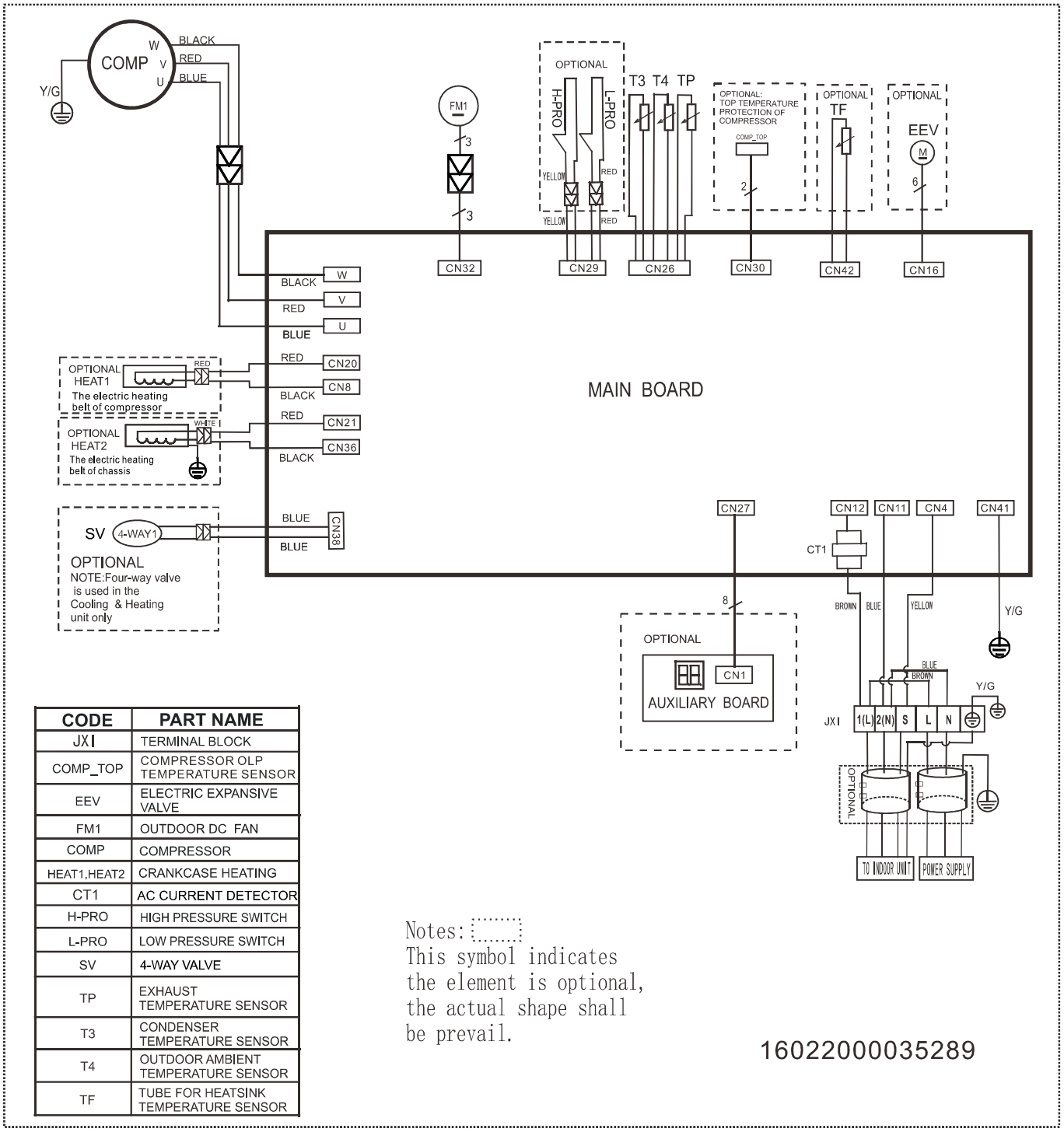

CODE	PART NAME
JXI	TERMINAL BLOCK
COMP_TOP	COMPRESSOR OLP TEMPERATURE SENSOR
EEV	ELECTRIC EXPANSIVE VALVE
FM1	OUTDOOR DC FAN
COMP	COMPRESSOR
HEAT1,HEAT2	CRANKCASE HEATING
CT1	AC CURRENT DETECTOR
H-PRO	HIGH PRESSURE SWITCH
L-PRO	LOW PRESSURE SWITCH
SV	4-WAY VALVE
TP	EXHAUST TEMPERATURE SENSOR
T3	CONDENSER TEMPERATURE SENSOR
T4	OUTDOOR AMBIENT TEMPERATURE SENSOR
TF	TUBE FOR HEATSINK TEMPERATURE SENSOR

Notes:
This symbol indicates the element is optional, the actual shape shall be prevail.

16022000035289

Outdoor unit wiring diagram: 16022000033470

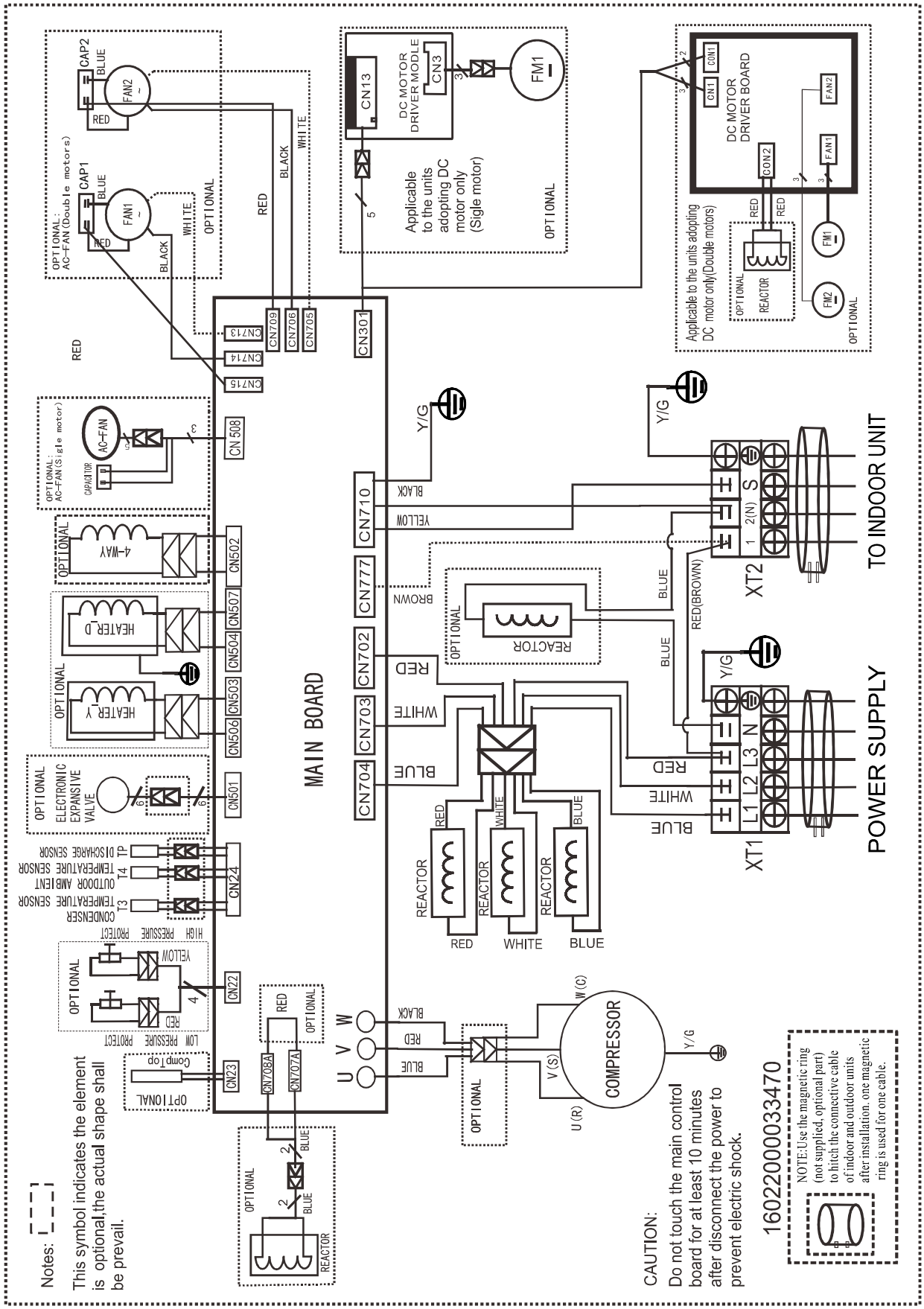

Outdoor unit printed circuit board diagram: 17122000044714, 17122000048121,17122000046453

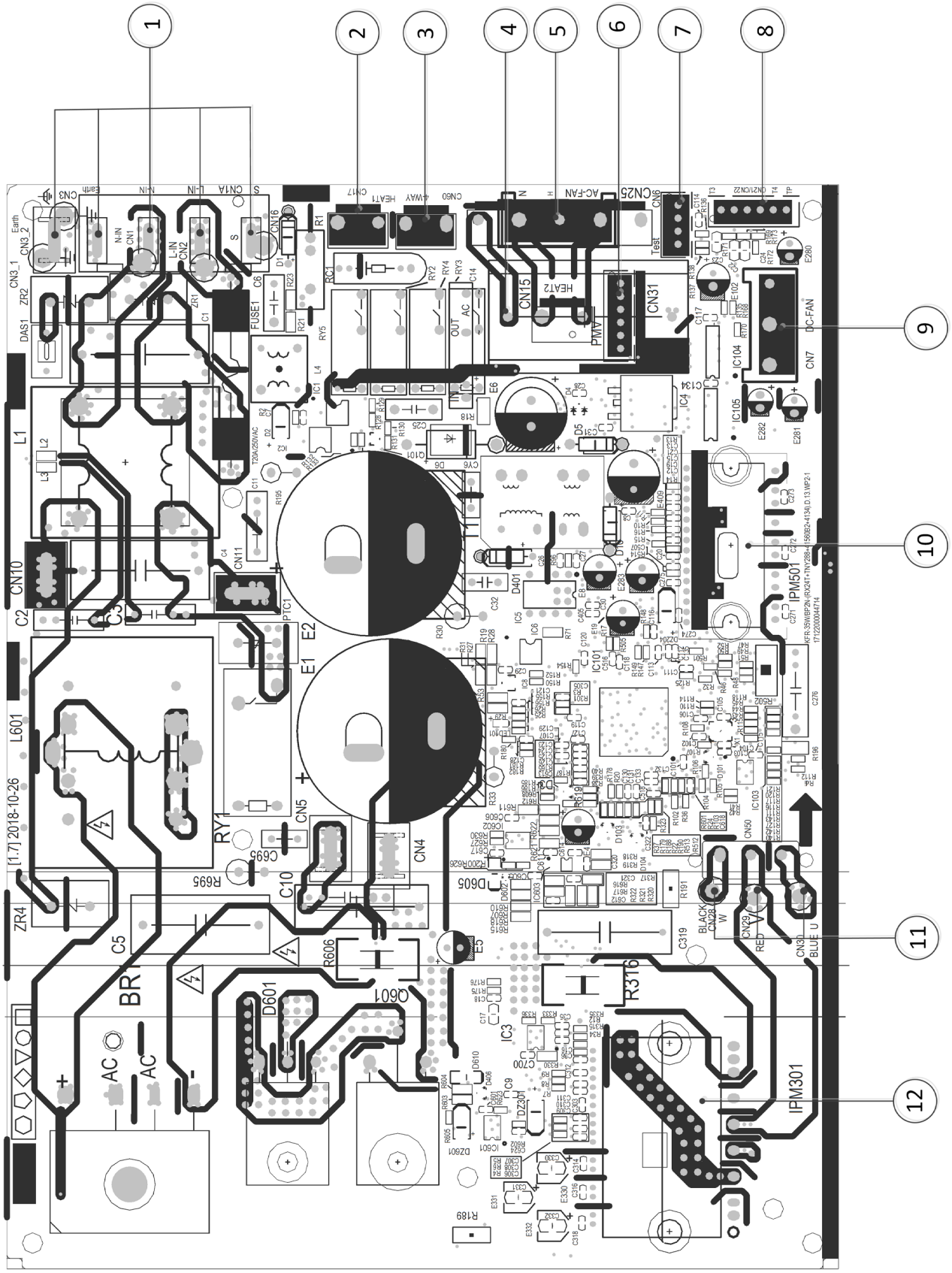

No.	Name	CN#	Meaning
1	CN1A	CN3	Earth: connect to Ground
		CN1	N_in: connect to N-line (208-230V AC input)
		CN2	L_in: connect to L-line (208-230V AC input)
		CN16	S: connect to indoor unit communication
2	HEAT1	CN17	connect to compressor heater, 208-230V AC when is ON
3	4-WAY	CN60	connect to 4 way valve, 208-230V AC when is ON.
4	HEAT2	CN15	connect to chassis heater, 208-230V AC when is ON
5	AC-FAN	CN25	connect to AC fan
6	PMV	CN31	connect to Electric Expansion Valve
7	TESTPORT	CN6	used for testing
8	TP T4 T3	CN21/CN22	connect to pipe temp. sensor T3, ambient temp. sensor T4, exhaust temp. sensor TP
9	DC-FAN	CN7	connect to DC fan
10	FAN_IPM	IPM 501	IPM for DC fan
11	W	CN28	connect to compressor
	V	CN29	0V AC (standby)
	U	CN30	10-200V AC (running)
12	COMP_IPM	IPM 301	IPM for compressor

Note: This section is for reference only. Please take practicality as standard.

Outdoor unit printed circuit board diagram: 17122000048064

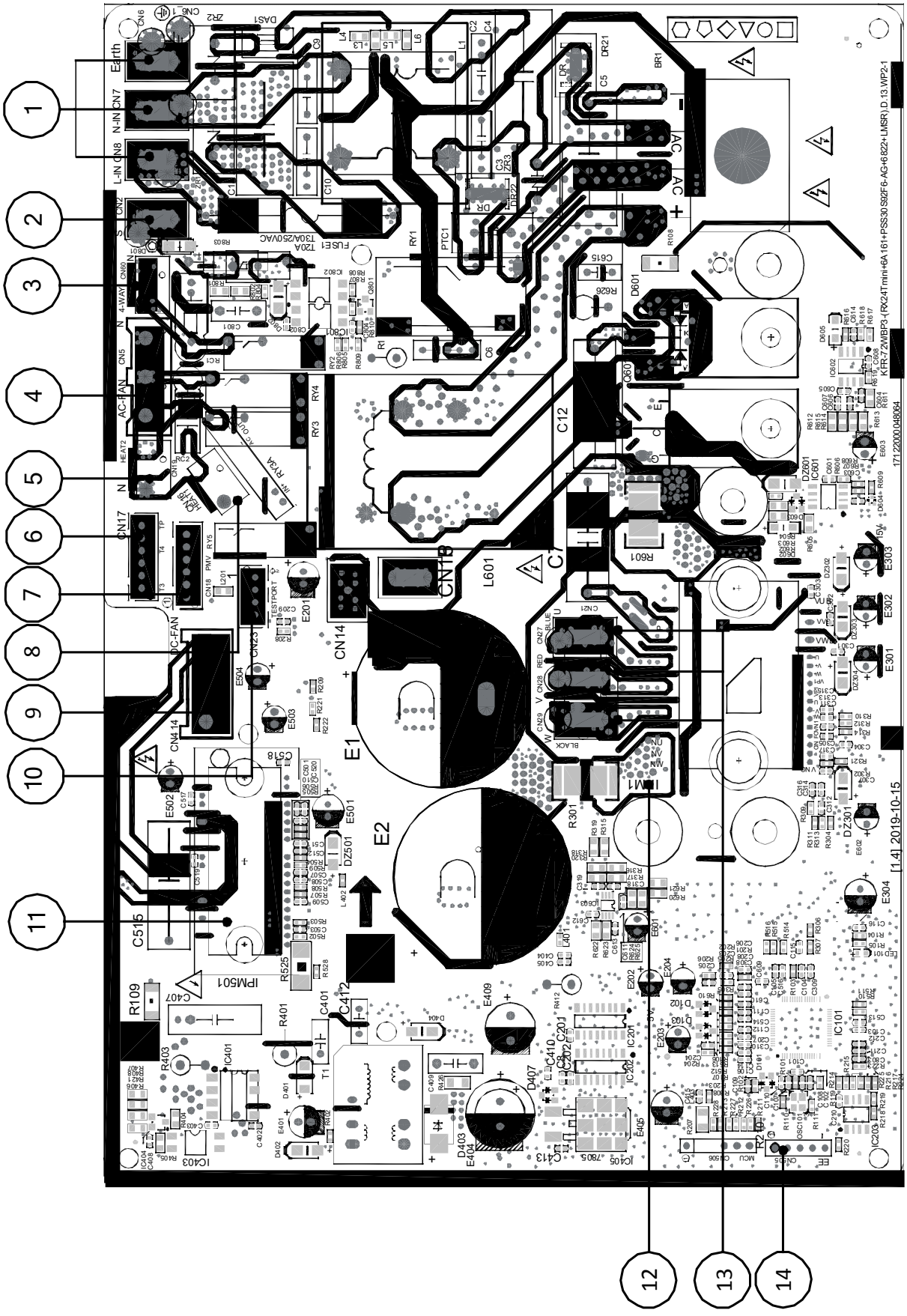
1
2
3
4
5
6
7
8
9
10
11
12
13
14
Earth
N-IN
L-IN
4-WAY
AC-FAN
DC-FAN
CN17
CN14
CN18
CN23
CN1
CN2
CN5
CN7
CN8
CN66
CN6
CN15
CN16
CN21
CN26
CN28
CN42
CN44
CN51
CN52
CN53
CN54
CN55
CN56
CN57
CN58
CN59
CN60
CN61
CN62
CN63
CN64
CN65
E1
E2
L601
C12
C7
C515
R109
IPM501
IC403
IC401
IC101
IC201
IC202
IC203
IC204
IC205
IC206
IC207
IC208
IC209
IC210
IC211
IC212
IC213
IC214
IC215
IC216
IC217
IC218
IC219
IC220
IC221
IC222
IC223
IC224
IC225
IC226
IC227
IC228
IC229
IC230
IC231
IC232
IC233
IC234
IC235
IC236
IC237
IC238
IC239
IC240
IC241
IC242
IC243
IC244
IC245
IC246
IC247
IC248
IC249
IC250
IC251
IC252
IC253
IC254
IC255
IC256
IC257
IC258
IC259
IC260
IC261
IC262
IC263
IC264
IC265
IC266
IC267
IC268
IC269
IC270
IC271
IC272
IC273
IC274
IC275
IC276
IC277
IC278
IC279
IC280
IC281
IC282
IC283
IC284
IC285
IC286
IC287
IC288
IC289
IC290
IC291
IC292
IC293
IC294
IC295
IC296
IC297
IC298
IC299
IC300
IC301
IC302
IC303
IC304
IC305
IC306
IC307
IC308
IC309
IC310
IC311
IC312
IC313
IC314
IC315
IC316
IC317
IC318
IC319
IC320
IC321
IC322
IC323
IC324
IC325
IC326
IC327
IC328
IC329
IC330
IC331
IC332
IC333
IC334
IC335
IC336
IC337
IC338
IC339
IC340
IC341
IC342
IC343
IC344
IC345
IC346
IC347
IC348
IC349
IC350
IC351
IC352
IC353
IC354
IC355
IC356
IC357
IC358
IC359
IC360
IC361
IC362
IC363
IC364
IC365
IC366
IC367
IC368
IC369
IC370
IC371
IC372
IC373
IC374
IC375
IC376
IC377
IC378
IC379
IC380
IC381
IC382
IC383
IC384
IC385
IC386
IC387
IC388
IC389
IC390
IC391
IC392
IC393
IC394
IC395
IC396
IC397
IC398
IC399
IC400
IC401
IC402
IC403
IC404
IC405
IC406
IC407
IC408
IC409
IC410
IC411
IC412
IC413
IC414
IC415
IC416
IC417
IC418
IC419
IC420
IC421
IC422
IC423
IC424
IC425
IC426
IC427
IC428
IC429
IC430
IC431
IC432
IC433
IC434
IC435
IC436
IC437
IC438
IC439
IC440
IC441
IC442
IC443
IC444
IC445
IC446
IC447
IC448
IC449
IC450
IC451
IC452
IC453
IC454
IC455
IC456
IC457
IC458
IC459
IC460
IC461
IC462
IC463
IC464
IC465
IC466
IC467
IC468
IC469
IC470
IC471
IC472
IC473
IC474
IC475
IC476
IC477
IC478
IC479
IC480
IC481
IC482
IC483
IC484
IC485
IC486
IC487
IC488
IC489
IC490
IC491
IC492
IC493
IC494
IC495
IC496
IC497
IC498
IC499
IC500
IC501
IC502
IC503
IC504
IC505
IC506
IC507
IC508
IC509
IC510
IC511
IC512
IC513
IC514
IC515
IC516
IC517
IC518
IC519
IC520
IC521
IC522
IC523
IC524
IC525
IC526
IC527
IC528
IC529
IC530
IC531
IC532
IC533
IC534
IC535
IC536
IC537
IC538
IC539
IC540
IC541
IC542
IC543
IC544
IC545
IC546
IC547
IC548
IC549
IC550
IC551
IC552
IC553
IC554
IC555
IC556
IC557
IC558
IC559
IC560
IC561
IC562
IC563
IC564
IC565
IC566
IC567
IC568
IC569
IC570
IC571
IC572
IC573
IC574
IC575
IC576
IC577
IC578
IC579
IC580
IC581
IC582
IC583
IC584
IC585
IC586
IC587
IC588
IC589
IC590
IC591
IC592
IC593
IC594
IC595
IC596
IC597
IC598
IC599
IC600
IC601
IC602
IC603
IC604
IC605
IC606
IC607
IC608
IC609
IC610
IC611
IC612
IC613
IC614
IC615
IC616
IC617
IC618
IC619
IC620
IC621
IC622
IC623
IC624
IC625
IC626
IC627
IC628
IC629
IC630
IC631
IC632
IC633
IC634
IC635
IC636
IC637
IC638
IC639
IC640
IC641
IC642
IC643
IC644
IC645
IC646
IC647
IC648
IC649
IC650
IC651
IC652
IC653
IC654
IC655
IC656
IC657
IC658
IC659
IC660
IC661
IC662
IC663
IC664
IC665
IC666
IC667
IC668
IC669
IC670
IC671
IC672
IC673
IC674
IC675
IC676
IC677
IC678
IC679
IC680
IC681
IC682
IC683
IC684
IC685
IC686
IC687
IC688
IC689
IC690
IC691
IC692
IC693
IC694
IC695
IC696
IC697
IC698
IC699
IC700
IC701
IC702
IC703
IC704
IC705
IC706
IC707
IC708
IC709
IC710
IC711
IC712
IC713
IC714
IC715
IC716
IC717
IC718
IC719
IC720
IC721
IC722
IC723
IC724
IC725
IC726
IC727
IC728
IC729
IC730
IC731
IC732
IC733
IC734
IC735
IC736
IC737
IC738
IC739
IC740
IC741
IC742
IC743
IC744
IC745
IC746
IC747
IC748
IC749
IC750
IC751
IC752
IC753
IC754
IC755
IC756
IC757
IC758
IC759
IC760
IC761
IC762
IC763
IC764
IC765
IC766
IC767
IC768
IC769
IC770
IC771
IC772
IC773
IC774
IC775
IC776
IC777
IC778
IC779
IC780
IC781
IC782
IC783
IC784
IC785
IC786
IC787
IC788
IC789
IC790
IC791
IC792
IC793
IC794
IC795
IC796
IC797
IC798
IC799
IC800
IC801
IC802
IC803
IC804
IC805
IC806
IC807
IC808
IC809
IC810
IC811
IC812
IC813
IC814
IC815
IC816
IC817
IC818
IC819
IC820
IC821
IC822
IC823
IC824
IC825
IC826
IC827
IC828
IC829
IC830
IC831
IC832
IC833
IC834
IC835
IC836
IC837
IC838
IC839
IC840
IC841
IC842
IC843
IC844
IC845
IC846
IC847
IC848
IC849
IC850
IC851
IC852
IC853
IC854
IC855
IC856
IC857
IC858
IC859
IC860
IC861
IC862
IC863
IC864
IC865
IC866
IC867
IC868
IC869
IC870
IC871
IC872
IC873
IC874
IC875
IC876
IC877
IC878
IC879
IC880
IC881
IC882
IC883
IC884
IC885
IC886
IC887
IC888
IC889
IC890
IC891
IC892
IC893
IC894
IC895
IC896
IC897
IC898
IC899
IC900
IC901
IC902
IC903
IC904
IC905
IC906
IC907
IC908
IC909
IC910
IC911
IC912
IC913
IC914
IC915
IC916
IC917
IC918
IC919
IC920
IC921
IC922
IC923
IC924
IC925
IC926
IC927
IC928
IC929
IC930
IC931
IC932
IC933
IC934
IC935
IC936
IC937
IC938
IC939
IC940
IC941
IC942
IC943
IC944
IC945
IC946
IC947
IC948
IC949
IC950
IC951
IC952
IC953
IC954
IC955
IC956
IC957
IC958
IC959
IC960
IC961
IC962
IC963
IC964
IC965
IC966
IC967
IC968
IC969
IC970
IC971
IC972
IC973
IC974
IC975
IC976
IC977
IC978
IC979
IC980
IC981
IC982
IC983
IC984
IC985
IC986
IC987
IC988
IC989
IC990
IC991
IC992
IC993
IC994
IC995
IC996
IC997
IC998
IC999
IC1000
IC1001
IC1002
IC1003
IC1004
IC1005
IC1006
IC1007
IC1008
IC1009
IC1010
IC1011
IC1012
IC1013
IC1014
IC1015
IC1016
IC1017
IC1018
IC1019
IC1020
IC1021
IC1022
IC1023
IC1024
IC1025
IC1026
IC1027
IC1028
IC1029
IC1030
IC1031
IC1032
IC1033
IC1034
IC1035
IC1036
IC1037
IC1038
IC1039
IC1040
IC1041
IC1042
IC1043
IC1044
IC1045
IC1046
IC1047
IC1048
IC1049
IC1050
IC1051
IC1052
IC1053
IC1054
IC1055
IC1056
IC1057
IC1058
IC1059
IC1060
IC1061
IC1062
IC1063
IC1064
IC1065
IC1066
IC1067
IC1068
IC1069
IC1070
IC1071
IC1072
IC1073
IC1074
IC1075
IC1076
IC1077
IC1078
IC1079
IC1080
IC1081
IC1082
IC1083
IC1084
IC1085
IC1086
IC1087
IC1088
IC1089
IC1090
IC1091
IC1092
IC1093
IC1094
IC1095
IC1096
IC1097
IC1098
IC1099
IC1100
IC1101
IC1102
IC1103
IC1104
IC1105
IC1106
IC1107
IC1108
IC1109
IC1110
IC1111
IC1112
IC1113
IC1114
IC1115
IC1116
IC1117
IC1118
IC1119
IC1120
IC1121
IC1122
IC1123
IC1124
IC1125
IC1126
IC1127
IC1128
IC1129
IC1130
IC1131
IC1132
IC1133
IC1134
IC1135
IC1136
IC1137
IC1138
IC1139
IC1140
IC1141
IC1142
IC1143
IC1144
IC1145
IC1146
IC1147
IC1148
IC1149
IC1150
IC1151
IC1152
IC1153
IC1154
IC1155
IC1156
IC1157
IC1158
IC1159
IC1160
IC1161
IC1162
IC1163
IC1164
IC1165
IC1166
IC1167
IC1168
IC1169
IC1170
IC1171
IC1172
IC1173
IC1174
IC1175
IC1176
IC1177
IC1178
IC1179
IC1180
IC1181
IC1182
IC1183
IC1184
IC1185
IC1186
IC1187
IC1188
IC1189
IC1190
IC1191
IC1192
IC1193
IC1194
IC1195
IC1196
IC1197
IC1198
IC1199
IC1200
IC1201
IC1202
IC1203
IC1204
IC1205
IC1206
IC1207
IC1208
IC1209
IC1210
IC1211
IC1212
IC1213
IC1214
IC1215
IC1216
IC1217
IC1218
IC1219
IC1220
IC1221
IC1222
IC1223
IC1224
IC1225
IC1226
IC1227
IC1228
IC1229
IC1230
IC1231
IC1232
IC1233
IC1234
IC1235
IC1236
IC1237
IC1238
IC1239
IC1240
IC1241
IC1242
IC1243
IC1244
IC1245
IC1246
IC1247
IC1248
IC1249
IC1250
IC1251
IC1252
IC1253
IC1254
IC1255
IC1256
IC1257
IC1258
IC1259
IC1260
IC1261
IC1262
IC1263
IC1264
IC1265
IC1266
IC1267
IC1268
IC1269
IC1270
IC1271
IC1272
IC1273
IC1274
IC1275
IC1276
IC1277
IC1278
IC1279
IC1280
IC1281
IC1282
IC1283
IC1284
IC1285
IC1286
IC1287
IC1288
IC1289
IC1290
IC1291
IC1292
IC1293
IC1294
IC1295
IC1296
IC1297
IC1298
IC1299
IC1300
IC1301
IC1302
IC1303
IC1304
IC1305
IC1306
IC1307
IC1308
IC1309
IC1310
IC1311
IC1312
IC1313
IC1314
IC1315
IC1316
IC1317
IC1318
IC1319
IC1320
IC1321
IC1322
IC1323
IC1324
IC1325
IC1326
IC1327
IC1328
IC1329
IC1330
IC1331
IC1332
IC1333
IC1334
IC1335
IC1336
IC1337
IC1338
IC1339
IC1340
IC1341
IC1342
IC1343
IC1344
IC1345
IC1346
IC1347
IC1348
IC1349
IC1350
IC1351
IC1352
IC1353
IC1354
IC1355
IC1356
IC1357
IC1358
IC1359
IC1360
IC1361
IC1362
IC1363
IC1364
IC1365
IC1366
IC1367
IC1368
IC1369
IC1370
IC1371
IC1372
IC1373
IC1374
IC1375
IC1376
IC1377
IC1378
IC1379
IC1380
IC1381
IC1382
IC1383
IC1384
IC1385
IC1386
IC1387
IC1388
IC1389
IC1390
IC1391
IC1392
IC1393
IC1394
IC1395
IC1396
IC1397
IC1398
IC1399
IC1400
IC1401
IC1402
IC1403
IC1404
IC1405
IC1406
IC1407
IC1408
IC1409
IC1410
IC1411
IC1412
IC1413
IC1414
IC1415
IC1416
IC1417
IC1418
IC1419
IC1420
IC1421
IC1422
IC1423
IC1424
IC1425
IC1426
IC1427
IC1428
IC1429
IC1430
IC1431
IC1432
IC1433
IC1434
IC1435
IC1436
IC1437
IC1438
IC1439
IC1440
IC1441
IC1442
IC1443
IC1444
IC1445
IC1446
IC1447
IC1448
IC1449
IC1450
IC1451
IC1452
IC1453
IC1454
IC1455
IC1456
IC1457
IC1458
IC1459
IC1460
IC1461
IC1462
IC1463
IC1464
IC1465
IC1466
IC1467
IC1468
IC1469
IC1470
IC1471
IC1472
IC1473
IC1474
IC1475
IC1476
IC1477
IC1478
IC1479
IC1480
IC1481
IC1482
IC1483
IC1484
IC1485
IC1486
IC1487
IC1488
IC1489
IC1490
IC1491
IC1492
IC1493
IC1494
IC1495
IC1496
IC1497
IC1498
IC1499
IC1500
IC1501
IC1502
IC1503
IC1504
IC1505
IC1506
IC1507
IC1508
IC1509
IC1510
IC1511
IC1512
IC1513
IC1514
IC1515
IC1516
IC1517
IC1518
IC1519
IC1520
IC1521
IC1522
IC1523
IC1524
IC1525
IC1526
IC1527
IC1528
IC1529
IC1530
IC1531
IC1532
IC1533
IC1534
IC1535
IC1536
IC1537
IC1538
IC1539
IC1540
IC1541
IC1542
IC1543
IC1544
IC1545
IC1546
IC1547
IC1548
IC1549
IC1550
IC1551
IC1552
IC1553
IC1554
IC1555
IC1556
IC1557
IC1558
IC1559
IC1560
IC1561
IC1562
IC1563
IC1564
IC1565
IC1566
IC1567
IC1568
IC1569
IC1570
IC1571
IC1572
IC1573
IC1574
IC1575
IC1576
IC1577
IC1578
IC1579
IC1580
IC1581
IC1582
IC1583
IC1584
IC1585
IC1586
IC1587
IC1588
IC1589
IC1590
IC1591
IC1592
IC1593
IC1594
IC1595
IC1596
IC1597
IC1598
IC1599
IC1600
IC1601
IC1602
IC1603
IC1604
IC1605
IC1606
IC1607
IC1608
IC1609
IC1610
IC1611
IC1612
IC1613
IC1614
IC1615
IC1616
IC1617
IC1618
IC1619
IC1620
IC1621
IC1622
IC1623
IC1624
IC1625
IC1626
IC1627
IC1628
IC1629
IC1630
IC1631
IC1632
IC1633
IC1634
IC1635
IC1636
IC1637
IC1638
IC1639
IC1640
IC1641
IC1642
IC1643
IC1644
IC1645
IC1646
IC1647
IC1648
IC1649
IC1650
IC1651
IC1652
IC1653
IC1654
IC1655
IC1656
IC1657
IC1658
IC1659
IC1660
IC1661
IC1662
IC1663
IC1664
IC1665
IC1666
IC1667
IC1668
IC1669
IC1670
IC1671
IC1672
IC1673
IC1674
IC1675
IC1676
IC1677
IC1678
IC1679
IC1680
IC1681
IC1682
IC1683
IC1684
IC1685
IC1686
IC1687
IC1688
IC1689
IC1690
IC1691
IC1692
IC1693
IC1694
IC1695
IC1696
IC1697
IC1698
IC1699
IC1700
IC1701
IC1702
IC1703
IC1704
IC1705
IC1706
IC1707
IC1708
IC1709
IC1710
IC1711
IC1712
IC1713
IC1714
IC1715
IC1716
IC1717
IC1718
IC1719
IC1720
IC1721
IC1722
IC1723
IC1724
IC1725
IC1726
IC1727
IC1728
IC1729
IC1730
IC1731
IC1732
IC1733
IC1734
IC1735
IC1736
IC1737
IC1738
IC1739
IC1740
IC1741
IC1742
IC1743
IC1744
IC1745
IC1746
IC1747
IC1748
IC1749
IC1750
IC1751
IC1752
IC1753
IC1754
IC1755
IC1756
IC1757
IC1758
IC1759
IC1760
IC1761
IC1762
IC1763
IC1764
IC1765
IC1766
IC1767
IC1768
IC1769
IC1770
IC1771
IC1772
IC1773
IC1774
IC1775
IC1776
IC1777
IC1778
IC1779
IC1780
IC1781
IC1782
IC1783
IC1784
IC1785
IC1786
IC1787
IC1788
IC1789
IC1790
IC1791
IC1792
IC1793
IC1794
IC1795
IC1796
IC1797
IC1798
IC1799
IC1800
IC1801
IC1802
IC1803
IC1804
IC1805
IC1806
IC1807
IC1808
IC1809
IC1810
IC1811
IC1812
IC1813
IC1814
IC1815
IC1816
IC1817
IC1818
IC1819
IC1820
IC1821
IC1822
IC1823
IC1824
IC1825
IC1826
IC1827
IC1828
IC1829
IC1830
IC1831
IC1832
IC1833
IC1834
IC1835
IC1836
IC1837
IC1838
IC1839
IC1840
IC1841
IC1842
IC1843
IC1844
IC1845
IC1846
IC1847
IC1848
IC1849
IC1850
IC1851
IC1852
IC1853
IC1854
IC1855
IC1856
IC1857
IC1858
IC1859
IC1860
IC1861
IC1862
IC1863
IC1864
IC1865
IC1866
IC1867
IC1868
IC1869
IC1870
IC1871
IC1872
IC1873
IC1874
IC1875
IC1876
IC1877
IC1878
IC1879
IC1880
IC1881
IC1882
IC1883
IC1884
IC1885
IC1886
IC1887
IC1888
IC1889
IC1890
IC1891
IC1892
IC1893
IC1894
IC1895
IC1896
IC1897
IC1898
IC1899
IC1900
IC1901
IC1902
IC1903
IC1904
IC1905
IC1906
IC1907
IC1908
IC1909
IC1910
IC1911
IC1912
IC1913
IC1914
IC1915
IC1916
IC1917
IC1918
IC1919
IC1920
IC1921
IC1922
IC1923
IC1924
IC1925
IC1926
IC1927
IC1928
IC1929
IC1930
IC1931
IC1932
IC1933
IC1934
IC1935
IC1936
IC1937
IC1938
IC1939
IC1940
IC1941
IC1942
IC1943
IC1944
IC1945
IC1946
IC1947
IC1948
IC1949
IC1950
IC1951
IC1952
IC1953
IC1954
IC1955
IC1956
IC1957
IC1958
IC1959
IC1960
IC1961
IC1962
IC1963
IC1964
IC1965
IC1966
IC1967
IC1968
IC1969
IC1970
IC1971
IC1972
IC1973
IC1974
IC1975
IC1976
IC1977
IC1978
IC1979
IC1980
IC1981
IC1982
IC1983
IC1984
IC1985
IC1986
IC1987
IC1988
IC1989
IC1990
IC1991
IC1992
IC1993
IC1994
IC1995
IC1996
IC1997
IC1998
IC1999
IC2000
IC2001
IC2002
IC2003
IC2004
IC2005
IC2006
IC2007
IC2008
IC2009
IC2010
IC2011
IC2012
IC2013
IC2014
IC2015
IC2016
IC2017
IC2018
IC2019
IC2020
IC2021
IC2022
IC2023
IC2024
IC2025
IC2026
IC2027
IC2028
IC2029
IC2030
IC2031
IC2032
IC2033
IC2034
IC2035
IC2036
IC2037
IC2038
IC2039
IC2040
IC2041
IC2042
IC2043
IC2044
IC2045
IC2046
IC2047
IC2048
IC2049
IC2050
IC2051
IC2052
IC2053
IC2054
IC2055
IC2056
IC2057
IC2058
IC2059
IC2060
IC2061
IC2062
IC2063
IC2064
IC2065
IC2066
IC2067
IC2068
IC2069
IC2070
IC2071
IC2072
IC2073
IC2074
IC2075
IC2076
IC2077
IC2078
IC2079
IC2080
IC2081
IC2082
IC2083
IC2084
IC2085
IC2086
IC2087
IC2088
IC2089
IC2090
IC2091
IC2092
IC2093
IC2094
IC2095
IC2096
IC2097
IC2098
IC2099
IC2100
IC2101
IC2102
IC2103
IC2104
IC2105
IC2106
IC2107
IC2108
IC2109
IC2110
IC2111
IC2112
IC2113
IC2114
IC2115
IC2116
IC2117
IC2118
IC2119
IC2120
IC2121
IC2122
IC2123
IC2124
IC2125
IC2126
IC2127
IC2128
IC2129
IC2130
IC2131
IC2132
IC2133
IC2134
IC2135
IC2136
IC2137
IC2138
IC2139
IC2140
IC2141
IC2142
IC2143
IC2144
IC2145
IC2146
IC2147
IC2148
IC2149
IC2150
IC2151
IC2152
IC2153
IC2154
IC2155
IC2156
IC2157
IC2158
IC2159
IC2160
IC2161
IC2162
IC2163
IC2164
IC2165
IC2166
IC2167
IC2168
IC2169
IC2170
IC2171
IC2172
IC2173
IC2174
IC2175
IC2176
IC2177
IC2178
IC2179
IC2180
IC2181
IC2182
IC2183
IC2184
IC2185
IC2186
IC2187
IC2188
IC2189
IC2190
IC2191
IC2192
IC2193
IC2194
IC2195
IC2196
IC2197
IC2198
IC2199
IC2200
IC2201
IC2202
IC2203
IC2204
IC2205
IC2206
IC2207
IC2208
IC2209
IC2210
IC2211
IC2212
IC2213
IC2214
IC2215
IC2216
IC2217
IC2218
IC2219
IC2220
IC2221
IC2222
IC2223
IC2224
IC2225
IC2226
IC2227
IC2228
IC2229
IC2230
IC2231
IC2232
IC2233
IC2234
IC2235
IC2236
IC2237
IC2238
IC2239
IC2240
IC2241
IC2242
IC2243
IC2244
IC2245
IC2246
IC2247
IC2248
IC2249
IC2250
IC2251
IC2252
IC2253
IC2254
IC2255
IC2256
IC2257
IC2258
IC2259
IC2260
IC2261
IC2262
IC2263
IC2264
IC2265
IC2266
IC2267
IC2268
IC2269
IC2270
IC2271
IC2272
IC2273
IC2274
IC2275
IC2276
IC2277
IC2278
IC2279
IC2280
IC2281
IC2282
IC2283
IC2284
IC2285
IC2286
IC2287
IC2288
IC2289
IC2290
IC2291
IC2292
IC2293
IC2294
IC2295
IC2296
IC2297
IC2298
IC2299
IC2300
IC2301
IC2302
IC2303
IC2304
IC2305
IC2306
IC2307
IC2308
IC2309
IC2310
IC2311
IC2312
IC2313
IC2314
IC2315
IC2316
IC2317
IC2318
IC2319
IC2320
IC2321
IC2322
IC2323
IC2324
IC2325
IC2326
IC2327
IC2328
IC2329
IC2330
IC2331
IC2332
IC2333
IC2334
IC2335
IC2336
IC2337
IC2338
IC2339
IC2340
IC2341
IC2342
IC2343
IC2344
IC2345
IC2346
IC2347
IC2348
IC2349
IC2350
IC2351
IC2352
IC2353
IC2354
IC2355
IC2356
IC2357
IC2358
IC2359
IC2360
IC2361
IC2362
IC2363
IC2364
IC2365
IC2366
IC2367
IC2368
IC2369
IC2370
IC2371
IC2372
IC2373
IC2374
IC2375
IC2376
IC2377
IC2378
IC2379
IC2380
IC2381
IC2382
IC2383
IC2384
IC2385
IC2386
IC2387
IC2388
IC2389
IC2390
IC2391
IC2392
IC2393
IC2394
IC2395
IC2396
IC2397
IC2398
IC2399
IC2400
IC2401
IC2402
IC2403
IC2404
IC2405
IC2406
IC2407
IC2408
IC2409
IC2410
IC2411
IC2412
IC2413
IC2414
IC2415
IC2416
IC2417
IC2418
IC2419
IC2420
IC2421
IC2422
IC2423
IC2424
IC2425
IC2426
IC2427
IC2428
IC2429
IC2430
IC2431
IC2432
IC2433
IC2434
IC2435
IC2436
IC2437
IC2438
IC2439
IC2440
IC2441
IC2442
IC2443
IC2444
IC2445
IC2446
IC2447
IC2448
IC2449
IC2450
IC2451
IC2452
IC2453
IC2454
IC2455
IC2456
IC2457
IC2458
IC2459
IC2460
IC2461
IC2462
IC2463
IC2464
IC2465
IC2466
IC2467
IC2468
IC2469
IC2470
IC2471
IC2472
IC2473
IC2474
IC2475
IC2476
IC2477
IC2478
IC2479
IC2480
IC2481
IC2482
IC2483
IC2484
IC2485
IC2486
IC2487
IC2488
IC2489
IC2490
IC2491
IC2492
IC2493
IC2494
IC2495
IC2496
IC2497
IC2498
IC2499
IC2500
IC2501
IC2502
IC2503
IC2504
IC2505
IC2506
IC2507
IC2508
IC2509
IC2510
IC2511
IC2512
IC2513
IC2514
IC2515
IC2516
IC2517
IC2518
IC2519
IC2520
IC2521
IC2522
IC2523
IC2524
IC2525
IC2526
IC2527
IC2528
IC2529
IC2530
IC2531
IC2532
IC2533
IC2534
IC2535
IC2536
IC2537
IC2538
IC2539
IC2540
IC2541
IC2542
IC2543
IC2544
IC2545
IC2546
IC2547
IC2548
IC2549
IC2550
IC2551
IC2552
IC2553
IC2554
IC2555
IC2556
IC2557
IC2558
IC2559
IC2560
IC2561
IC2562
IC2563
IC2564
IC2565
IC2566
IC2567
IC2568
IC2569
IC2570
IC2571
IC2572
IC2573
IC2574
IC2575
IC2576
IC2577
IC2578
IC2579
IC2580
IC2581
IC2582
IC2583
IC2584
IC2585
IC2586
IC2587
IC2588
IC2589
IC2590
IC2591
IC2592
IC2593
IC2594
IC2595
IC2596
IC2597
IC2598
IC2599
IC2600
IC2601
IC2602
IC2603
IC2604
IC2605
IC2606
IC2607
IC2608
IC2609
IC2610
IC2611
IC2612
IC2613
IC2614
IC2615
IC2616
IC2617
IC2618
IC2619
IC2620
IC2621
IC2622
IC2623
IC2624
IC2625
IC2626
IC2627
IC2628
IC2629
IC2630
IC2631
IC2632
IC2633
IC2634
IC2635
IC2636
IC2637
IC2638
IC2639
IC2640
IC2641
IC2642
IC2643
IC2644
IC2645
IC2646
IC2647
IC2648
IC2649
IC2650
IC2651
IC2652
IC2653
IC2654
IC2655
IC2656
IC2657
IC2658
IC2659
IC2660
IC2661
IC2662
IC2663
IC2664
IC2665
IC2666
IC2667
IC2668
IC2669
IC2670
IC2671
IC2672
IC2673
IC2674
IC2675
IC2676
IC2677
IC2678
IC2679
IC2680
IC2681
IC2682
IC2683
IC2684
IC2685
IC2686
IC2687
IC2688
IC2689
IC2690
IC2691
IC2692
IC2693
IC2694
IC2695
IC2696
IC2697
IC2698
IC2699
IC2700
IC2701
IC2702
IC2703
IC2704
IC2705
IC2706
IC2707
IC2708
IC2709
IC2710
IC2711
IC2712
IC2713
IC2714
IC2715
IC2716
IC2717
IC2718
IC2719
IC2720
IC2721
IC2722
IC2723
IC2724
IC2725
IC2726
IC2727
IC2728
IC2729
IC2730
IC2731
IC2732
IC2733
IC2734
IC2735
IC2736
IC2737
IC2738
IC2739
IC2740
IC2741
IC2742
IC2743
IC2744
IC2745
IC2746
IC2747
IC2748
IC2749
IC2750
IC2751
IC2752
IC2753
IC2754
IC2755
IC2756
IC2757
IC2758
IC2759
IC2760
IC2761
IC2762
IC2763
IC2764
IC2765
IC2766
IC2767
IC2768
IC2769
IC2770
IC2771
IC2772
IC2773
IC2774
IC2775
IC2776
IC2777
IC2778
IC2779
IC2780
IC2781
IC2782
IC2783
IC2784
IC2785
IC2786
IC2787
IC2788
IC2789
IC2790
IC2791
IC2792
IC2793
IC2794
IC2795
IC2796
IC2797
IC2798
IC2799
IC2800
IC2801
IC2802
IC2803
IC2804
IC2805
IC2806
IC2807
IC2808
IC2809
IC2810
IC2811
IC2812
IC2813
IC2814
IC2815
IC2816
IC2817
IC2818
IC2819
IC2820
IC2821
IC2822
IC2823
IC2824
IC2825
IC2826
IC2827
IC2828
IC2829
IC2830
IC2831
IC2832
IC2833
IC2834
IC2835
IC2836
IC2837
IC2838
IC2839
IC2840
IC2841
IC2842
IC2843
IC2844
IC2845
IC2846
IC2847
IC2848
IC2849
IC2850
IC2851
IC2852
IC2853
IC2854
IC2855
IC2856
IC2857
IC2858
IC2859
IC2860
IC2861
IC2862
IC2863
IC2864
IC2865
IC2866
IC2867
IC2868
IC2869
IC2870
IC2871
IC2872
IC2873
IC2874
IC2875
IC2876
IC2877
IC2878
IC2879
IC2880
IC2881
IC2882
IC2883
IC2884
IC2885
IC2886
IC2887
IC2888
IC2889
IC2890
IC2891
IC2892
IC2893
IC2894
IC2895
IC2896
IC2897
IC2898
IC2899
IC2900
IC2901
IC2902
IC2903
IC2904
IC2905
IC2906
IC2907
IC2908
IC2909
IC2910
IC2911
IC2912
IC2913
IC2914
IC2915
IC2916
IC2917
IC2918
IC2919
IC2920
IC2921
IC2922
IC2923
IC2924
IC2925
IC2926
IC2927
IC2928
IC2929
IC2930
IC2931
IC2932
IC2933
IC2934
IC2935
IC2936
IC2937
IC2938
IC2939
IC2940
IC2941
IC2942
IC2943
IC2944
IC2945
IC2946
IC2947
IC2948
IC2949
IC2950
IC2951
IC2952
IC2953
IC2954
IC2955
IC2956
IC2957
IC2958
IC2959
IC2960
IC2961
IC2962
IC2963
IC2964
IC2965
IC2966
IC2967
IC2968
IC2969
IC2970
IC2971
IC2972
IC2973
IC2974
IC2975
IC2976
IC2977
IC2978
IC2979
IC2980
IC2981
IC2982
IC2983
IC2984
IC2985
IC2986
IC2987
IC2988
IC2989
IC2990
IC2991
IC2992
IC2993
IC2994
IC2995
IC2996
IC2997
IC2998
IC2999
IC3000
IC3001
IC3002
IC3003
IC3004
IC3005
IC3006
IC3007
IC3008
IC3009
IC3010
IC3011
IC3012
IC3013
IC3014
IC3015
IC3016
IC3017
IC3018
IC3019
IC3020
IC3021
IC3022
IC3023
IC3024
IC3025
IC3026
IC3027
IC3028
IC3029
IC3030
IC3031
IC3032
IC3033
IC3034
IC3035
IC3036
IC3037
IC3038
IC3039
IC3040
IC3041
IC3042
IC3043
IC3044
IC3045
IC3046
IC3047
IC3048
IC3049
IC3050
IC3051
IC3052
IC3053
IC3054
IC3055
IC3056
IC3057
IC3058
IC3059
IC3060
IC3061
IC3062
IC3063
IC3064
IC3065
IC3066
IC3067
IC3068
IC3069
IC3070
IC3071
IC3072
IC3073
IC3074
IC3075
IC3076
IC3077
IC3078
IC3079
IC3080
IC3081
IC3082
IC3083
IC3084
IC3085
IC3086
IC3087
IC3088
IC3089
IC3090
IC3091
IC3092
IC3093
IC3094
IC3095
IC3096
IC3097
IC3098
IC3099
IC3100
IC3101
IC3102
IC3103
IC3104
IC3105
IC3106
IC3107
IC3108
IC3109
IC3110
IC3111
IC3112
IC3113
IC3114
IC3115
IC3116
IC3117
IC3118
IC3119
IC3120
IC3121
IC3122
IC3123
IC3124
IC3125
IC3126
IC3127
IC3128
IC3129
IC3130
IC3131
IC3132
IC3133
IC3134
IC3135
IC3136
IC3137
IC3138
IC3139
IC3140
IC3141
IC3142
IC3143
IC3144
IC3145
IC3146
IC3147
IC3148
IC3149
IC3150
IC3151
IC3152
IC3153
IC3154
IC3155
IC3156
IC3157
IC3158
IC3159
IC3160
IC3161
IC3162
IC3163
IC3164
IC3165
IC3166
IC3167
IC3168
IC3169
IC3170
IC3171
IC3172
IC3173
IC3174
IC3175
IC3176
IC3177
IC3178
IC3179
IC3180
IC3181
IC3182
IC3183
IC3184
IC3185
IC3186
IC3187
IC3188
IC3189
IC3190
IC3191
IC3192
IC3193
IC3194
IC3195
IC3196
IC3197
IC3198
IC3199
IC3200
IC3201
IC3202
IC3203
IC3204
IC3205
IC3206
IC3207
IC3208
IC3209
IC3210
IC3211
IC3212
IC3213
IC3214
IC3215
IC3216
IC3217
IC3218
IC3219
IC3220
IC3221
IC3222
IC3223
IC3224
IC3225
IC3226
IC3227
IC3228
IC3229
IC3230
IC3231
IC3232
IC3233
IC3234
IC3235
IC3236
IC3237
IC3238
IC3239
IC3240
IC3241
IC3242
IC3243
IC3244
IC3245
IC3246
IC3247
IC3248
IC3249
IC3250
IC3251
IC3252
IC3253
IC3254
IC3255
IC3256
IC3257
IC3258
IC3259
IC3260
IC3261
IC3262
IC3263
IC3264
IC3265
IC3266
IC3267
IC3268
IC3269
IC3270
IC3271
IC3272
IC3273
IC3274
IC3275
IC3276
IC3277
IC3278
IC3279
IC3280
IC3281
IC3282
IC3283
IC3284
IC3285
IC3286
IC3287
IC3288
IC3289
IC3290
IC3291
IC3292
IC3293
IC3294
IC3295
IC3296
IC3297
IC3298
IC3299
IC3300
IC3301
IC3302
IC3303
IC3304
IC3305
IC3306
IC3307
IC3308
IC3309
IC3310
IC3311
IC3312
IC3313
IC3314
IC3315
IC3316
IC3317
IC3318
IC3319
IC3320
IC3321
IC3322
IC3323
IC3324
IC3325
IC3326
IC3327
IC3328
IC3329
IC3330
IC3331
IC3332
IC3333
IC3334
IC3335
IC3336
IC3337
IC3338
IC3339
IC3340
IC3341
IC3342
IC3343
IC3344
IC3345
IC3346
IC3347
IC3348
IC3349
IC3350
IC3351
IC3352
IC3353
IC3354
IC3355
IC3356
IC3357
IC3358
IC3359
IC3360
IC3361
IC3362
IC3363
IC3364
IC3365
IC3366
IC3367
IC3368
IC3369
IC3370
IC3371
IC3372
IC3373
IC3374
IC3375
IC3376
IC3377
IC3378
IC3379
IC3380
IC3381
IC3382
IC3383
IC3384
IC3385
IC3386
IC3387
IC3388
IC3389
IC3390
IC3391
IC3392
IC3393
IC3394
IC3395
IC3396
IC3397
IC3398
IC3399
IC3400
IC3401
IC3402
IC3403
IC3404
IC3405
IC3406
IC3407
IC3408
IC3409
IC3410
IC3411
IC3412
IC3413
IC3414
IC3415
IC3416
IC3417
IC3418
IC3419
IC3420
IC3421
IC3422
IC3423
IC3424
IC3425
IC3426
IC3427
IC3428
IC3429
IC3430
IC3431
IC3432
IC3433
IC3434
IC3435
IC3436
IC3437
IC3438
IC3439
IC3440
IC3441
IC3442
IC3443
IC3444
IC3445
IC3446
IC3447
IC3448
IC3449
IC3450
IC3451
IC3452
IC3453
IC3454
IC3455
IC3456
IC3457
IC3458
IC3459
IC3460
IC3461
IC3462
IC3463
IC3464
IC3465
IC3466
IC3467
IC3468
IC3469
IC3470
IC3471
IC3472
IC3473
IC3474
IC3475
IC3476
IC3477
IC3478
IC3479
IC3480
IC3481
IC3482
IC3483
IC3484
IC3485
IC3486
IC3487
IC3488
IC3489
IC3490
IC3491
IC3492
IC3493
IC3494
IC3495
IC3496
IC3497
IC3

No.	Name	CN#	Meaning
1	Power Supply	CN6	Earth: connect to Ground
		CN7	N_in: connect to N-line (208-230V AC input)
		CN8	L_in: connect to L-line (208-230V AC input)
2	S	CN2	S: connect to indoor unit communication
3	4-WAY	CN60	connect to 4 way valve, 208-230V AC when is ON.
4	AC-FAN	CN5	connect to AC fan
5	HEAT2	CN19	connect to chassis heater, 208-230V AC when is ON
6	TP T4 T3	CN17	connect to pipe temp. sensor T3, ambient temp. sensor T4, exhaust temp. sensor TP
7	PMV	CN18	connect to Electric Expansion Valve
8	HEAT1	CN16	connect to compressor heater, 208-230V AC when is ON
9	DC-FAN	CN414	connect to DC fan
10	TESTPORT	CN23	used for testing
11	FAN_IPM	IPM501	IPM for DC fan
12	COMP_IPM	IPM1	IPM for compressor
13	U	CN27	connect to compressor
	V	CN28	0V AC (standby)
	W	CN29	200-300V AC (running)
14	EE_PORT	CN505	EEPROM programer port

Note: This section is for reference only. Please take practicality as standard.

Outdoor unit printed circuit board diagram: 17122000047742

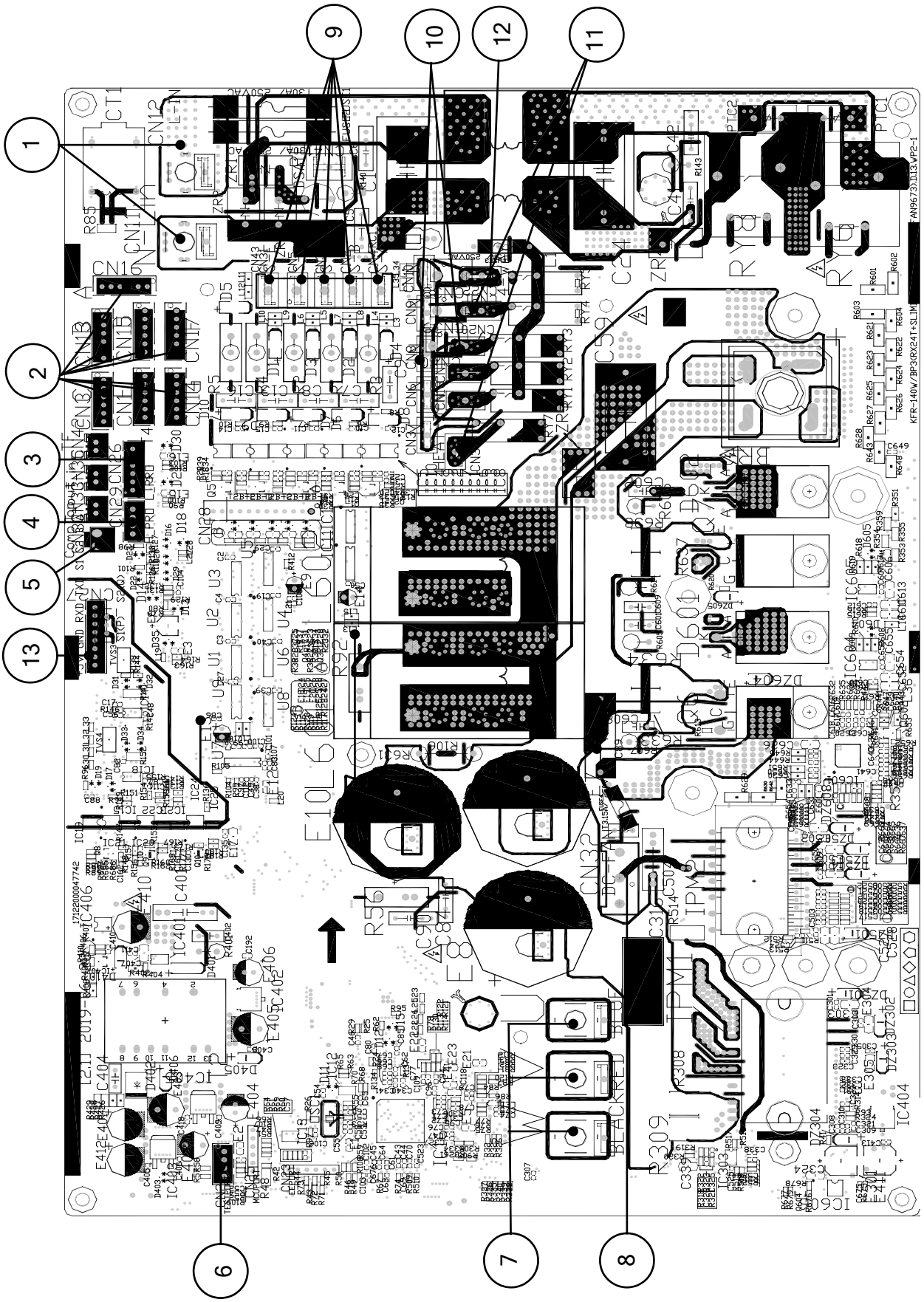

No.	Name	CN#	Meaning
1	Power Supply	CN11	N_in: connect to N-line (208-230V AC input)
		CN12	L_in: connect to L-line (208-230V AC input)
2	EEV-A	CN16	connect to electric expansion valve
	EEV-B	CN13	
	EEV-C	CN3	
	EEV-D	CN15	
	EEV-E	CN1	
	EEV-F	CN17	
	EEV-G	CN14	
3	T3 T4 TP	CN26	connect to pipe temp. sensor T3, ambient temp. sensor T4, exhaust temp. sensor TP
4	H-PRO,L-RPO	CN29	connect to high and low pressure swtich(pin1-pin2&pin3-pin4:5VDC pulse wave)
5	OLP TEMP. SENSOR	CN30	connect to compressor top temp. sensor (5VDC Pulse wave)
6	TESTPORT	CN24	used for testing
7	COMPRESSOR	U	connect to compressor
		V	0V AC (standby)
		W	10-200V AC (running)
8	DC-FAN	CN32	connect to DC fan
9	S-E	CN31	S: connect to indoor unit communication(pin1-pin2: 24VDC Pulse wave; pin2-pin3: 208-230V AC input)
	S-D	CN5	
	S-C(mono)	CN34	
	S-B	CN2	
	S-A	CN4	

No.	Name	CN#	Meaning
10	HEAT_D	CN8	connect to the heater, 208-230V AC when is ON
		CN20	
11	HEAT_Y	CN21	
		CN36	
12	4-WAY	CN38	connect to 4 way valve, 208-230V AC when is ON.
13	/	CN27	connect to key board CN1

Note: This section is for reference only. Please take practicality as standard.

Outdoor unit printed circuit board diagram: 17122000041841

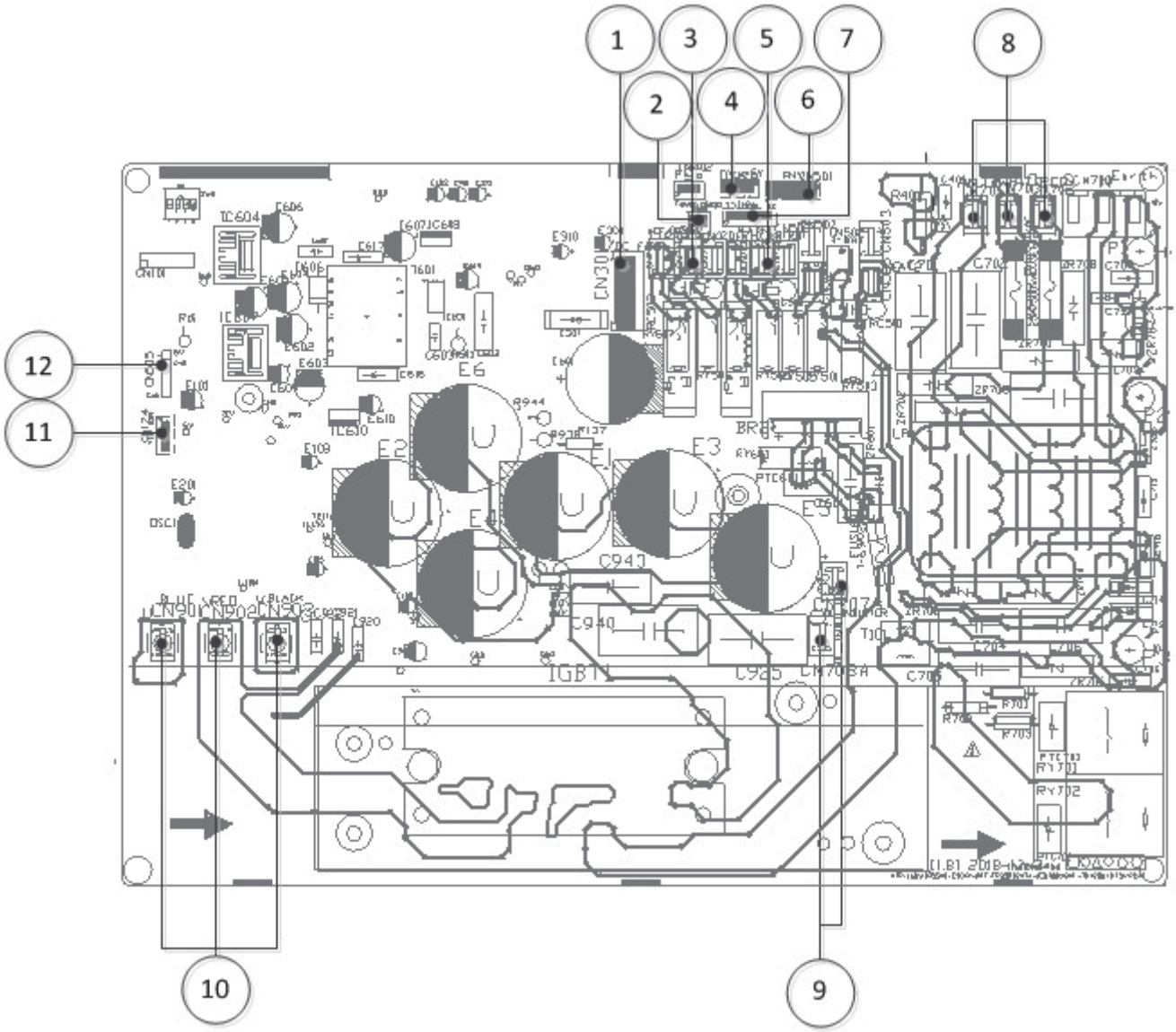

No.	Name	CN#	Meaning
1	CN301	CN301	Connect to DC fan motor
2	CN23	CN23	Connect to Comp Top
3	CN705	CN705	Connect to AC fan motor
	CN706	CN706	Connect to AC fan motor
	CN709	CN709	Connect to AC fan motor
4	CN22	CN22	Connect to high/low pressure protect
5	CN715	CN715	Connect to AC fan motor
	CN714	CN714	
	CN714	CN714	
6	CN501	CN501	Connect to electronic expansive valve
7	CN24	CN24	Connect to condenser temperature, outdoor ambient and discharge sensor
8	CN704	CN704	Power Supply (L1)
	CN703	CN703	Power Supply (L2)
	CN702	CN702	Power Supply (L3)
9	CN708A	CN708A	Connect to reactor
	CN707A	CN707A	
10	U	U	Connect to compressor
	V	V	
	W	W	
11	CN174	CN174	Test port
12	CN505	CN505	EEprom port

Note: This section is for reference only. Please take practicality as standard.

Outdoor unit DC motor driver board diagram: 17122000021912

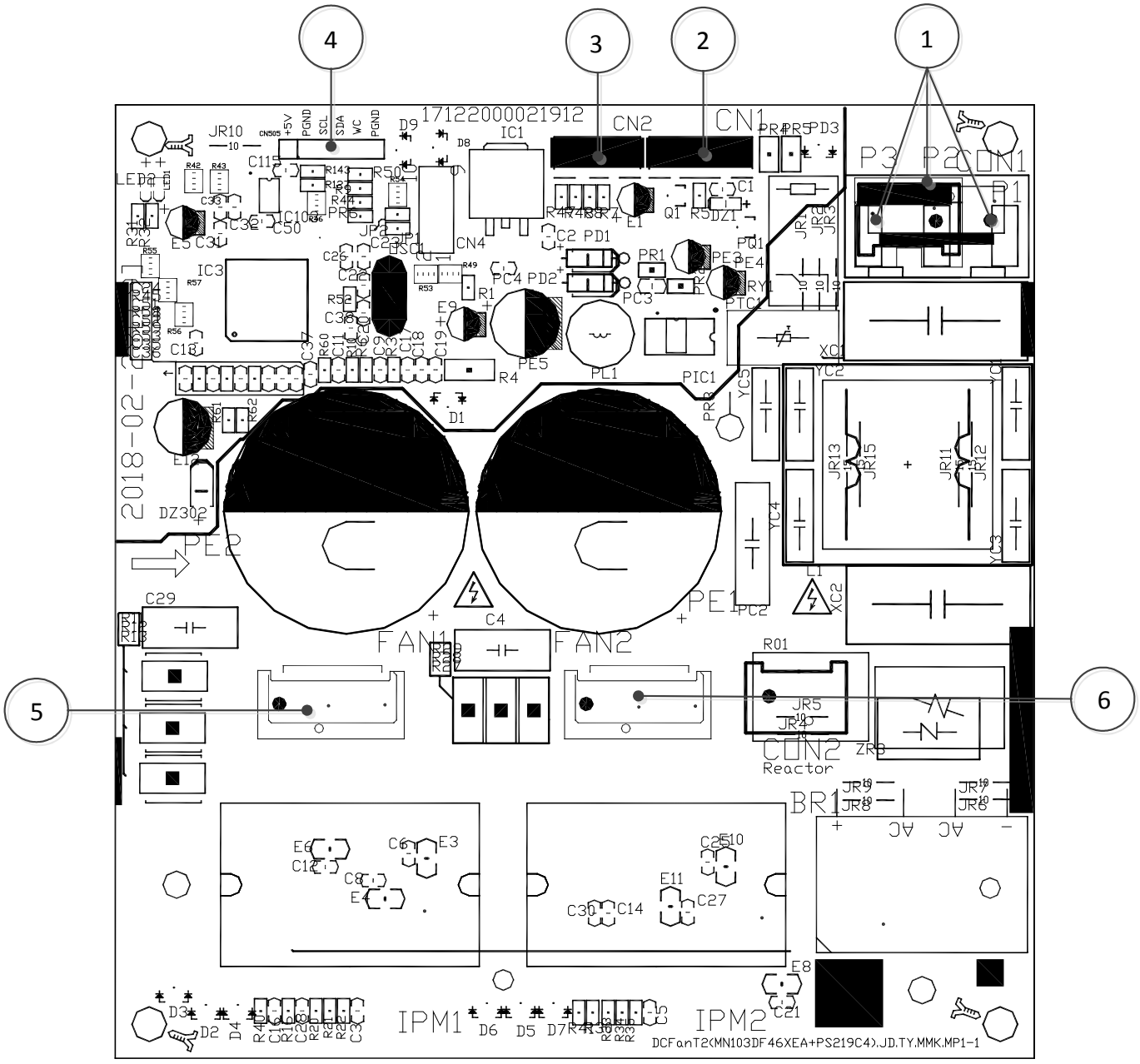

No.	Name	CN#	Meaning
1	POWER	CON1	Power supply 208-230V AC
		P2	
		P3	
2	CN1	CN1	connect to main board
3	TESTPORT	CN2	used for testing
4	CN505	CN505	connect to PC communication
5	FAN1	FAN1	connect to DC fan1
6	FAN2	FAN2	connect to DC fan2

Installation

Contents

1. Installation Overview
2. Location Selection
3. Indoor Unit Installation
4. Outdoor Unit Installation
5. Drainage Pipe Installation
6. Refrigerant Pipe Installation
7. Vacuum Drying and Leakage Checking
8. Additional Refrigerant Charge
9. Engineering of Insulation
10. Engineering of Electrical Wiring
11 Test Operation

1. Installation Overview

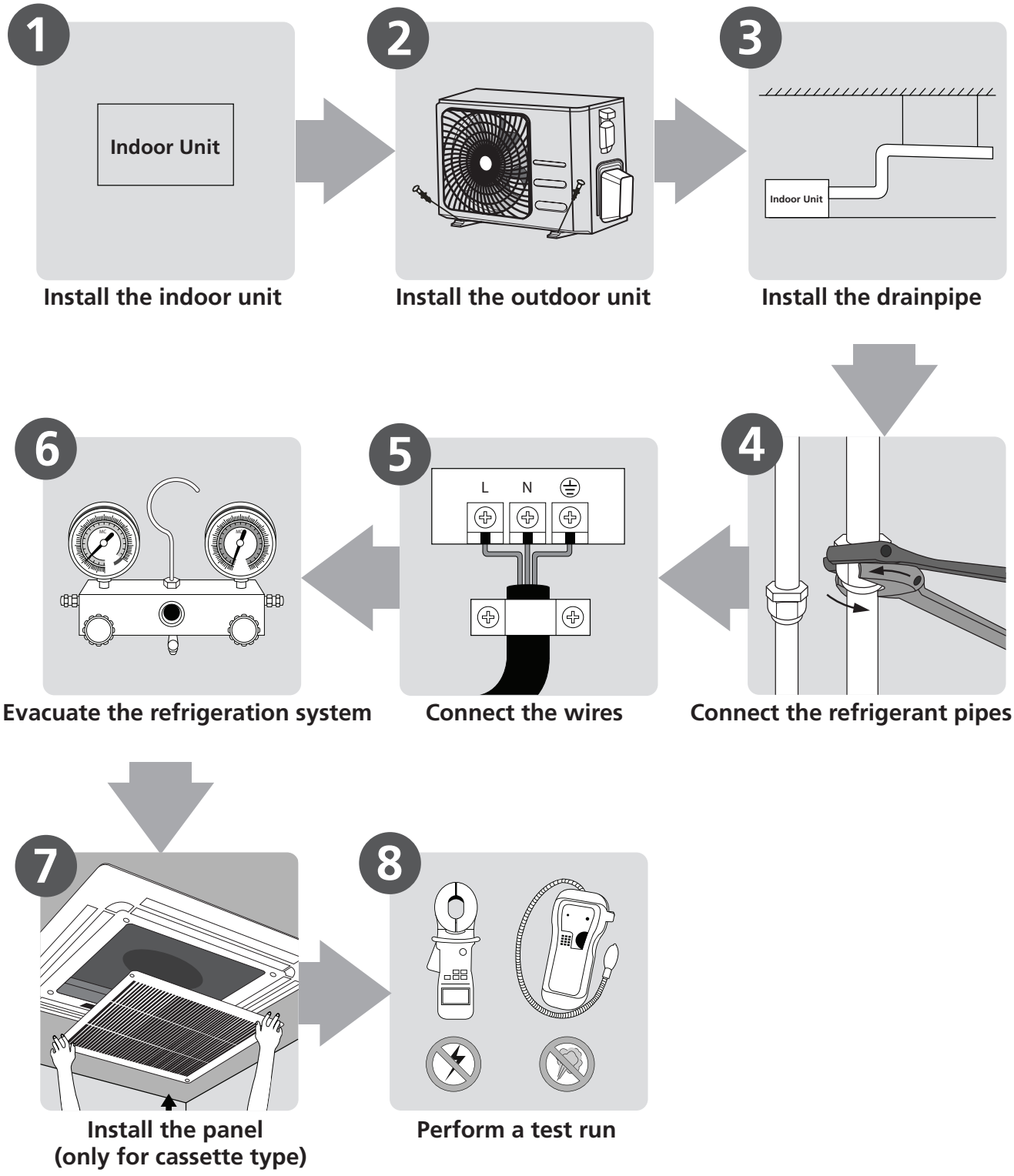

2. Location selection

2.1 Unit location selection can refer to installation manual.

2.2 DO NOT install the unit in the following locations:

- Where oil drilling or fracking is taking place.
- Coastal areas with high salt content in the air.
- Areas with caustic gases in the air, such as near hot springs.
- Areas with power fluctuations, such as factories.
- Enclosed spaces, such as cabinets.
- Areas with strong electromagnetic waves.
- Areas that store flammable materials or gas.
- Rooms with high humidity, such as bathrooms or laundry rooms.
- If possible, DO NOT install the unit where it is exposed to direct sunlight.

2.3 The minimum distance between the outdoor unit and walls described in the installation guide does not apply to airtight rooms. Be sure to keep the unit unobstructed in at least two of the three directions (M, N, P)

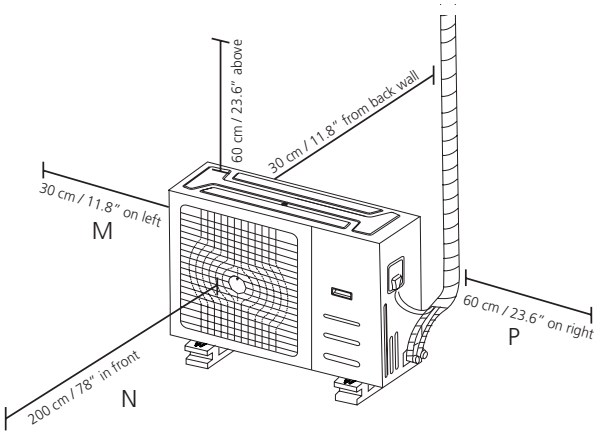

2.4 Rows of series installation

The relations between H, A and L are as follows.

	L	A
L ≤ H	L ≤ 1/2H	25 cm / 9.8" or more
	1/2H < L ≤ H	30 cm / 11.8" or more
L > H	Can not be installed	

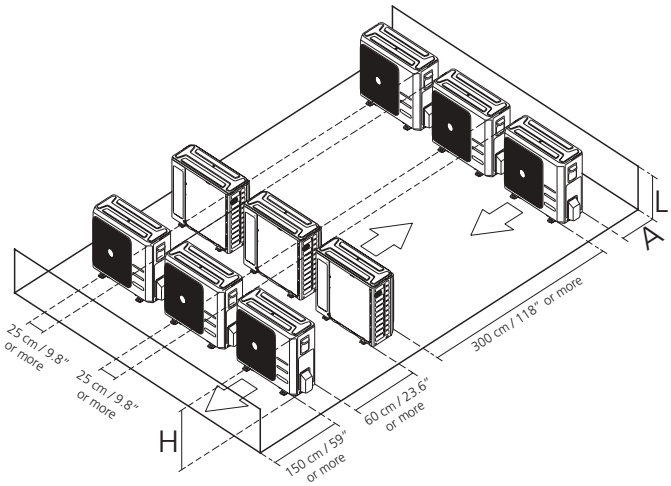

DO NOT install the rows of series like following figure.

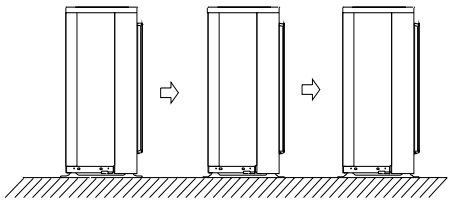

2.5. If the location is exposed to strong winds (for example: near a seaside), the unit must be placed against the wall to shelter it from the wind. If necessary, use an awning.

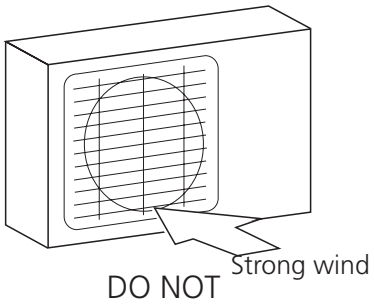

3. Indoor Unit Installation(Console)

3.1 Service space for indoor unit

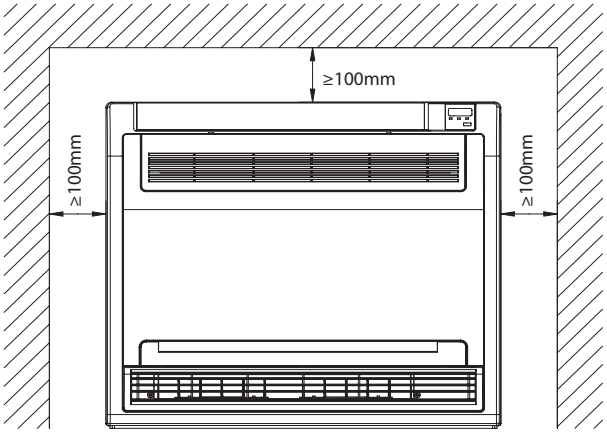

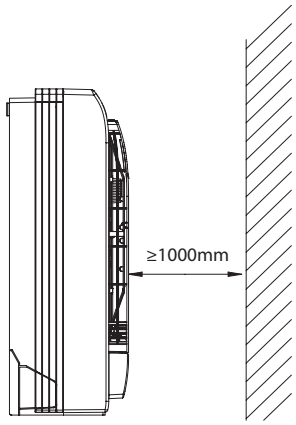

3.2 Bolt Pitch

Ceiling Installation

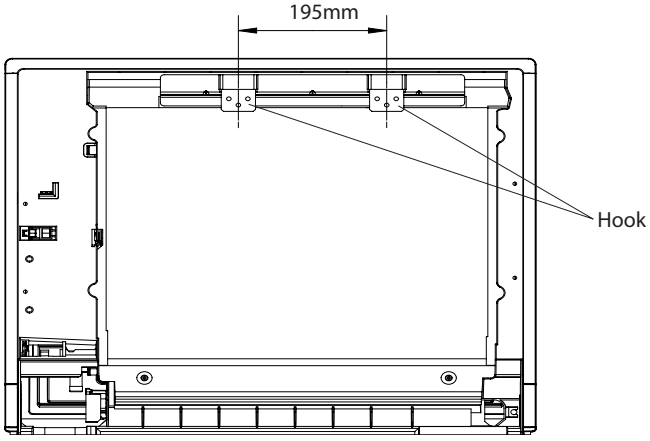

3.3 Installing the main body

1. Affix the hook with a tapping screw onto the wall.

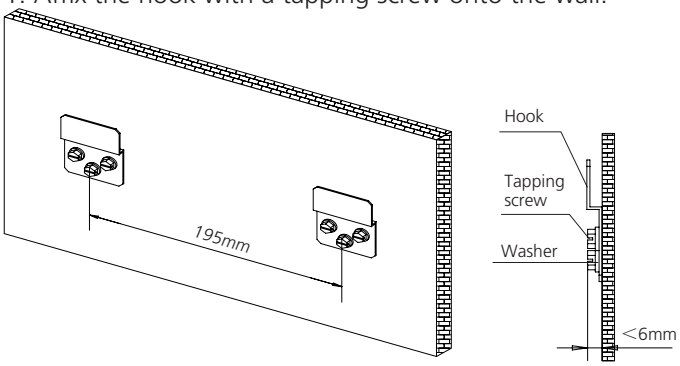

2. Hang the indoor unit on the hook. (The bottom of body can touch the floor or remain suspended, but the body must be installed vertically.)

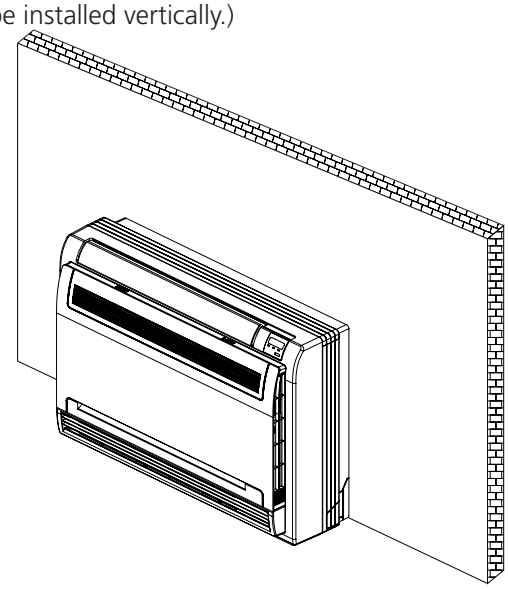

3. Taking the indoor unit apart to connect the pipes

- Open the front panel:
  Slide the two stoppers on the left and right sides inward until they click.

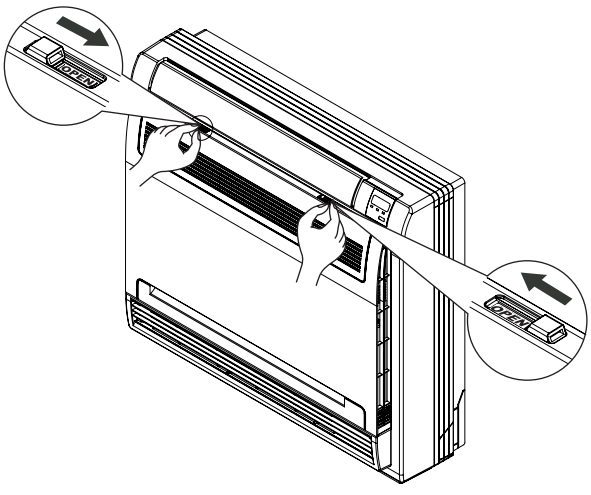

- Remove the front panel.
  Remove the string. Allow the front panel to fall forward and remove it

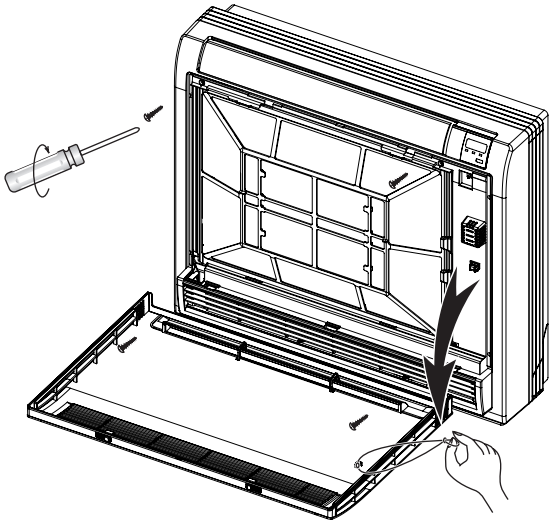

- Remove the face plate.
  Remove the four screws. Open the bottom of the face plate at a 30-degree angle. Lift the top of the face plate.

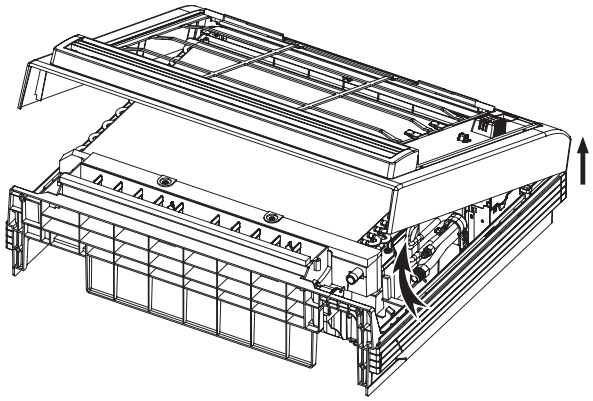

NOTE: All the figures in this manual are for demonstration purposes only. The air conditioner you have purchased may be slightly different in design, though similar in shape.

3. Indoor Unit Installation(Compact Cassette Type)

3.1 Service space for indoor unit

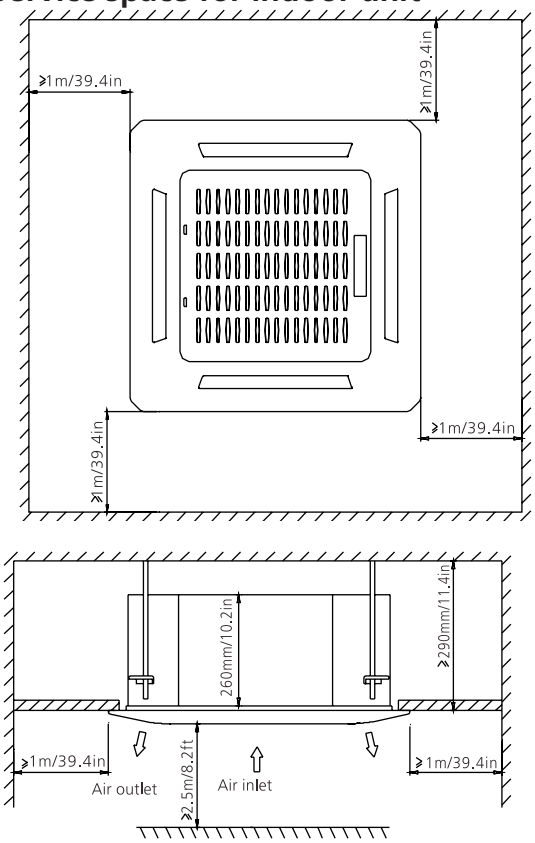

3.2 Hang Indoor Unit

1. Use the included paper template to cut a rectangular hole in the ceiling, leaving at least 1m (39.4") on all sides. The cut hole size should be 4cm(1.6") larger than the body size.

Be sure to mark the areas where ceiling hook holes will be drilled.

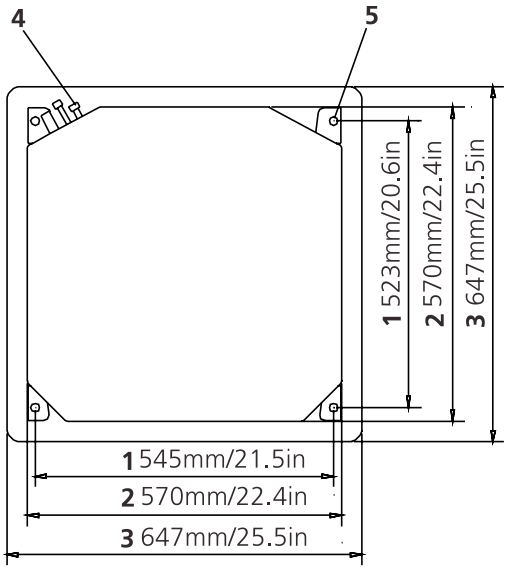

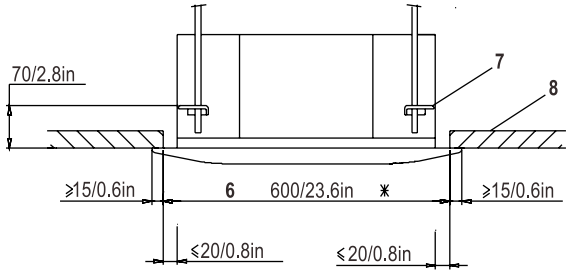

1 Suspension bolt pitch dimensions
2 Body dimensions
3 Decoration panel dimensions
4 Refrigerant piping
5 Suspension bolt (×4)
6 Ceiling opening dimensions
7 Hanger bracket
8 Ceiling board

2. Drill 4 holes 5cm (2") deep at the ceiling hook positions in the internal ceiling. Be sure to hold the drill at a 90° angle to the ceiling.
3. Using a hammer, insert the ceiling hooks into the pre-drilled holes. Secure the bolt using the included washers and nuts.
4. Install the four suspension bolts



5. Mount the indoor unit. You will need two people to lift and secure it. Insert suspension bolts into the unit's hanging holes. Fasten them using the included washers and nuts

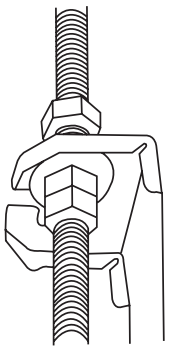

Adjust the position to ensure the gaps between the indoor

unit and the four sides of false ceiling are even. The bottom of the unit should be 24mm / 0.9in higher than ceiling board. Generally, L should be half the length of the suspension bolt or long enough to prevent the nuts from coming off.

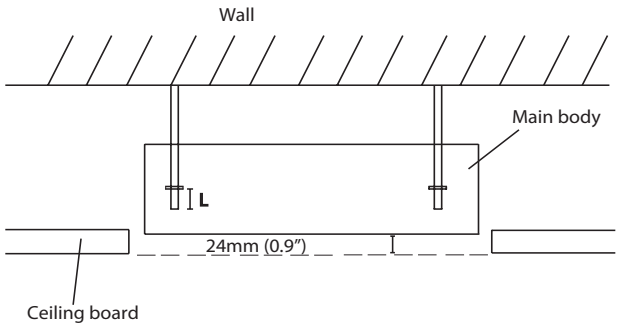

CAUTION:

Ensure that the unit is completely level.

The unit is equipped with a built-in drain pump and float switch. If the unit is tilted against the direction of condensate flows (the drainpipe side is raised), the float switch may malfunction and cause water to leak.

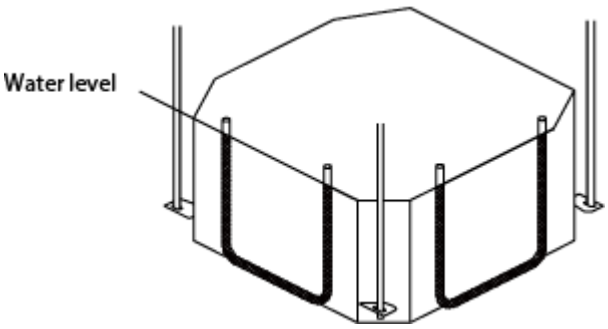

NOTE FOR NEW HOME INSTALLATION

When installing the unit in a new home, the ceiling hooks can be embedded in advance. Make sure that the hooks do not come loose due to concrete shrinkage. After installing the indoor unit, fasten the installation paper template onto the unit with bolts (M6X12) to determine in advance the dimension and position of the opening on the ceiling. Follow the instructions above for the remainder of the installation.

3.3 Compact Cassette Panel Installation

3.3.1 Remove the front grille

1. Slide the 2 grille hooks toward the middle of the decoration panel.

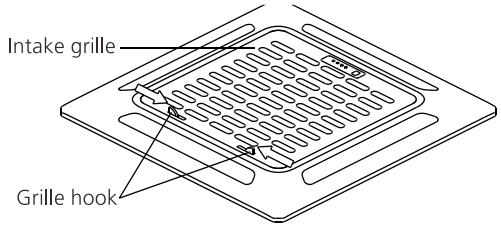

2. Hold the grille at a 45° angle, lift it up slightly and detach it from the main body.

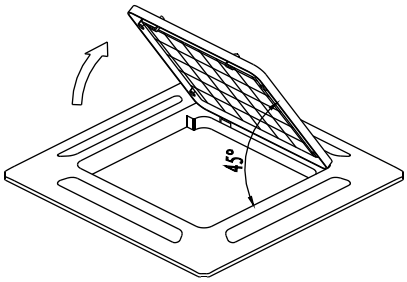

3.3.2 Install the panel

1. Align the indicate "△" on the decoration panel to the indicate "△" on the unit .

2. Attach the decoration panel to the unit with the supplied screws as shown in figure below.

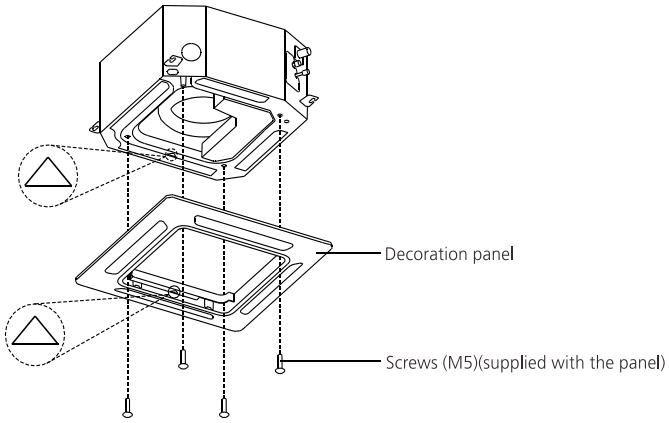

3. After installing the panel, ensure that there is no space between the unit body and decoration panel. Otherwise air may leak through the gap and cause dewdrop.

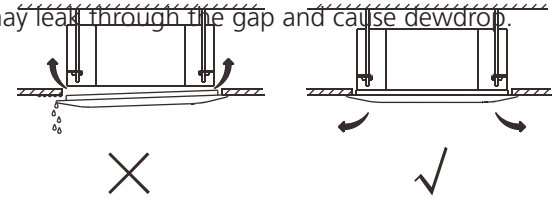

3.3.3 Mount the grille

Ensure that the buckles at the back of the grille be properly seated in the groove of the panel.

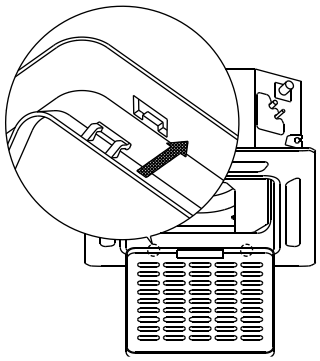

3.3.4 Connect the two wires of the panel to the main board of the unit.

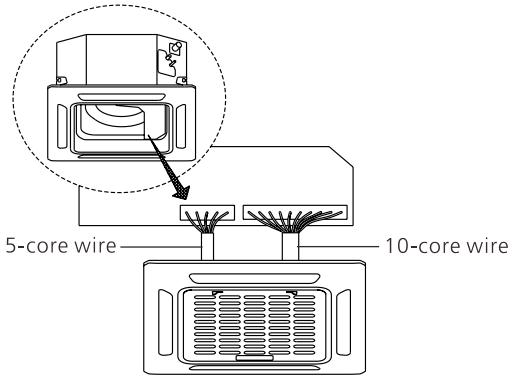

3.3.5 Fasten the control box lid with two screws .

3.3.6 Close the front grille, and close the two grille hooks.

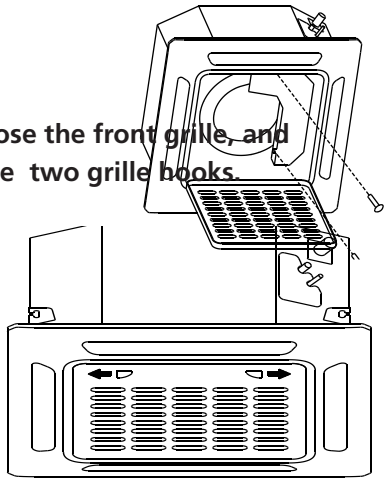

3. Indoor Unit Installation(Super-slim Cassette Type)

3.1 Service space for indoor unit

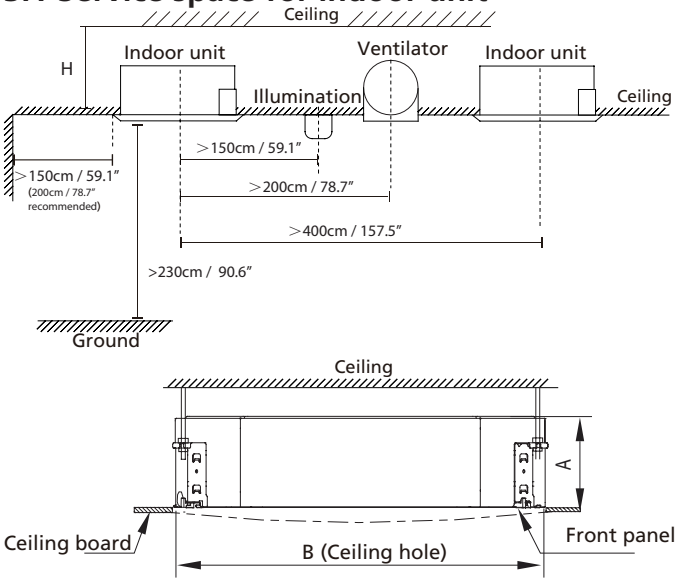

Capacity (kBtu/h)	A(mm/inch)	H(mm/inch)	B(mm/inch)
24	205/8.07	>230/9.06	900/35.4
30/36	245/9.65	>271/10.7	
42~55	287/11.3	>313/12.3	

3.2 Hang Indoor Unit

1. Use the included paper template to cut a rectangular hole in the ceiling, leaving at least 1m (39.4") on all sides. The cut hole size should be 4cm(1.6") larger than the body size.

Be sure to mark the areas where ceiling hook holes will be drilled.

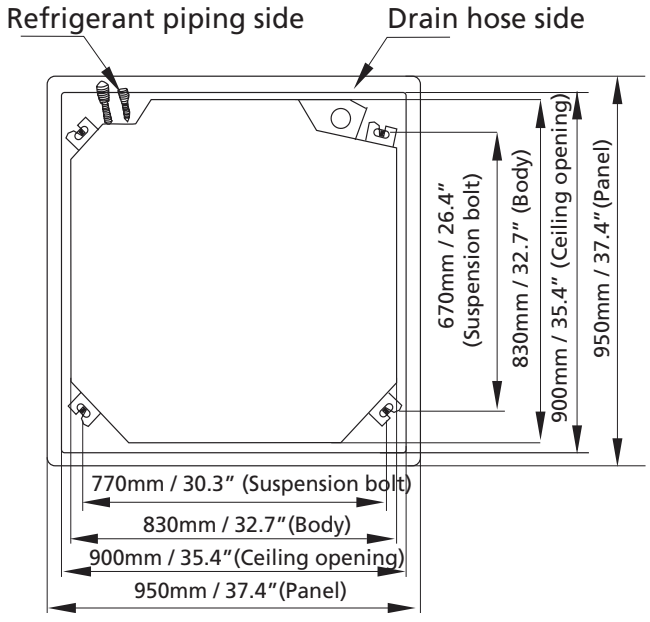

2. Drill 4 holes 12cm-15.5cm (4.7"-6.1") deep at the ceiling hook positions in the internal ceiling. Be sure to hold the drill at a 90° angle to the ceiling.
3. Using a hammer, insert the ceiling hooks into the pre-drilled holes. Secure the bolt using the included washers and nuts.
4. Install the four suspension bolts



5. Mount the indoor unit. You will need two people to lift and secure it. Insert suspension bolts into the unit's hanging holes. Fasten them using the included washers and nuts

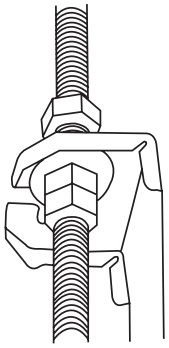

Adjust the position to ensure the gaps between the indoor unit and the four sides of false ceiling are even. The bottom of the unit should be 10 - 25mm (0.4-0.98") higher than ceiling board. Generally, L should be half the length of the suspension bolt or long enough to prevent the nuts from coming off.

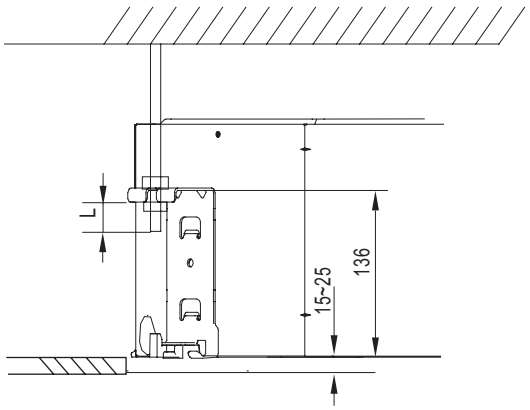

CAUTION:

Ensure that the unit is completely level.

The unit is equipped with a built-in drain pump and float switch. If the unit is tilted against the direction of condensate flows (the drainpipe side is raised), the float switch may malfunction and cause water to leak.

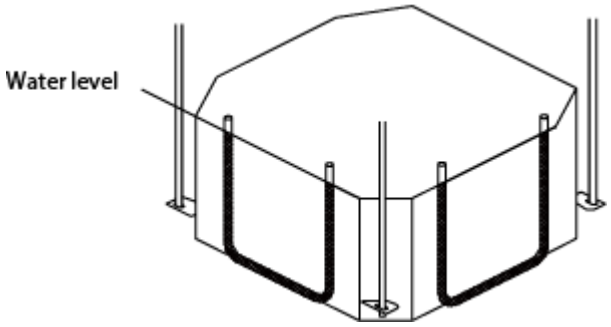

NOTE FOR NEW HOME INSTALLATION

When installing the unit in a new home, the ceiling hooks can be embedded in advance. Make sure that the hooks do not come loose due to concrete shrinkage. After installing the indoor unit, fasten the installation paper template onto the unit with bolts (M6X12) to determine in advance the dimension and position of the opening on the ceiling. Follow the instructions above for the remainder of the installation.

3.3 Panel Installation of Super-slim Cassette

3.3.1 Remove the front grille

1.Push one side of the grille screw cover then remove the grid screw.

2. Push both of the tabs towards the middle simultaneously to unlock the hook on the grille.

3. Hold the grille at a 45° angle, lift it up slightly and detach it from the main body

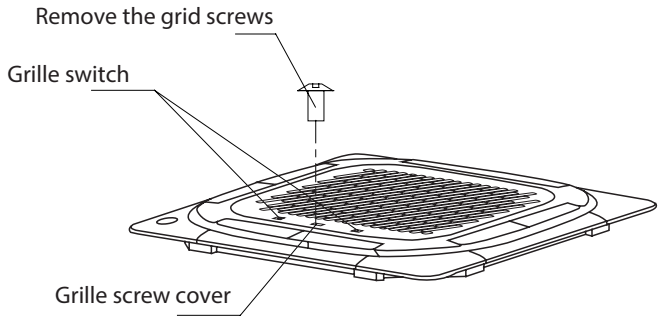

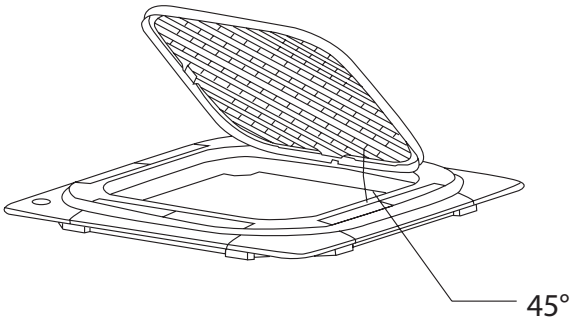

3.3.2 Remove the installation covers at the four corners by sliding them outwards.

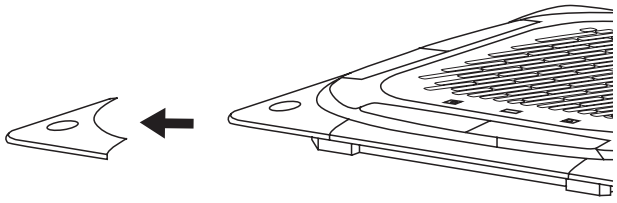

3.3.3 Install the panel

1. Align the front panel to the main body, taking into account the position of the piping and drain sides. Hang the four latches of the decorative panel to the hooks of the indoor unit. Tighten the panel hook screws evenly at the four corners.

Note: Tighten the screws until the thickness of the sponge between the main body and the panel reduces to 4-6mm (0.2-0.3”). The edge of the panel should be in contact with the ceiling well.

2. Adjust the panel by turning it to the direction of arrow shown in figure below so that the ceiling opening is completely covered.

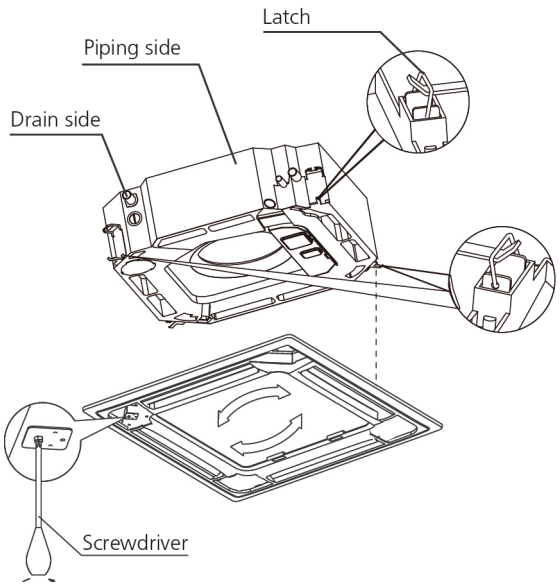

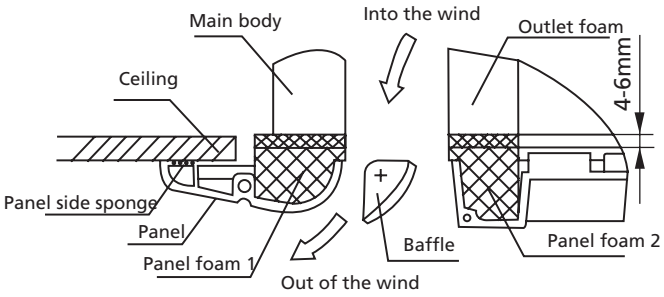

NOTE: If the height of the indoor unit needs to be adjusted, you can do so through the openings at the panel's four corners. Make sure that the internal wiring and drainpipe are not affected by this adjustment.

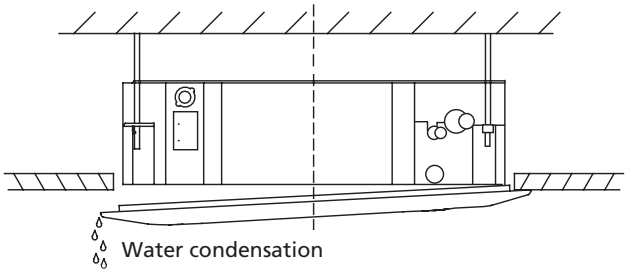

Failure to tighten screws can cause water leakage.

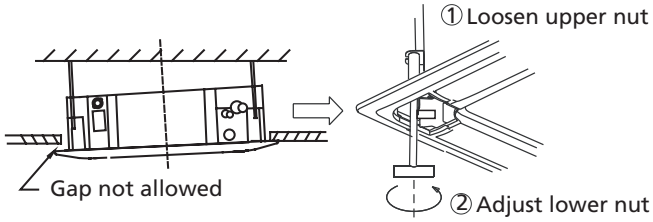

If the unit is not hung correctly and a gap exists, the unit's height must be adjusted to ensure proper function. The unit's height can be adjusted by loosening the upper nut, and adjusting the lower nut.

3. Hang the intake grille on the panel, and then connect the lead connectors of the louver motor and the control box on the panel to the corresponding connectors of the main body.

4. Re-installed into the style grid.

5.Reinstall the installation cover.

Fix the installation cover plate rope to the pillar of the installation cover plate, and gently press the installation cover plate into the panel.

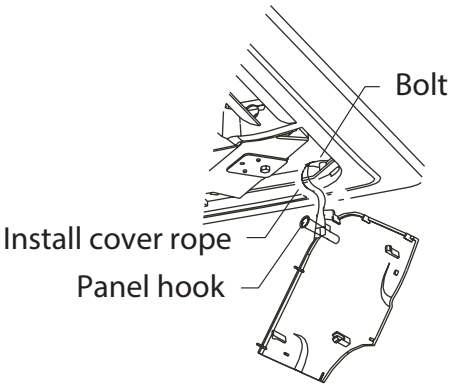

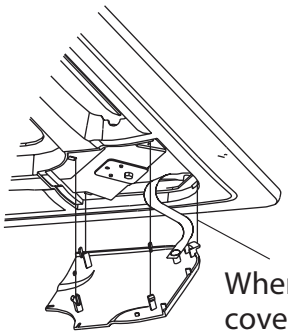

When installing the cover, slide the four slide fasteners into the corresponding slots on the panel.

NOTE: After installation, the butt plugs of display, swing, water pump and other wire bodies must be placed in the electric control box.

3. Indoor Unit Installation(Duct)

3.1 Service space for indoor unit

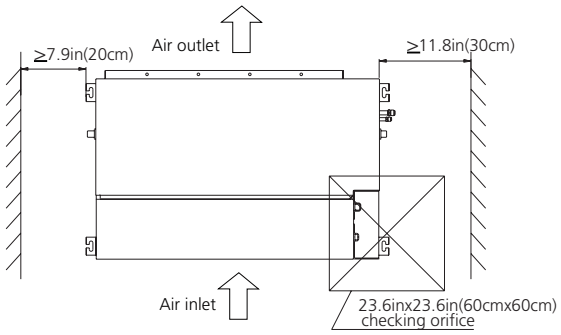

3.2 Hang Indoor Unit

1. Please refer to the following diagrams to locate the four positioning screw bolt hole on the ceiling. Be sure to mark the areas where ceiling hook holes will be drilled.

For A6 Duct,

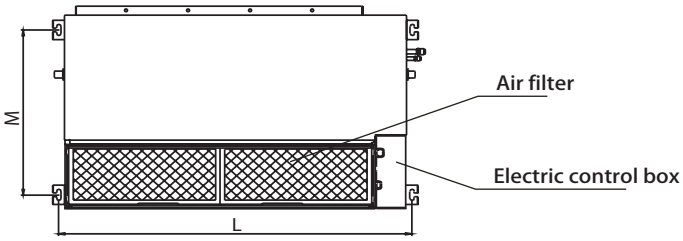

Capacity(KBtu/h)	Size of mounted plug((mm/inch))	
	L	M
12	741/29.2	360/14.2
18	920/36.2	508/20
24	1140/44.9	598/23.5
30~36	1400/55.1	598/23.5
42~60	1240/48.8	697/27.4

2. Install and fit pipes and wires after you have finished installing the main body. When choosing where to start, determine the direction of the pipes to be drawn out.

Especially in cases where there is a ceiling involved, align the refrigerant pipes, drain pipes, and indoor and outdoor lines with their connection points before mounting the unit..

3. Install hanging screw bolts.

1) Cut off the roof beam.

2) Strengthen the point at which the cut was made. Consolidate the roof beam..

4. After you select an installation location,align the refrigerant pipes, drain pipes, as well as indoor and outdoor wires with their connection points before mounting the unit..

5. Drill 4 holes 10cm (4") deep at the ceiling hook positions in the internal ceiling. Be sure to hold the drill at a 90° angle to the ceiling.

6. Secure the bolt using the included washers and nuts.

7. Install the four suspension bolts.

8. Mount the indoor unit with at least two people to lift and secure it. Insert suspension bolts into the unit's hanging holes. Fasten them using the washers and nuts provided.

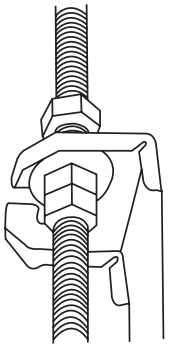

9. Mount the indoor unit onto the hanging screw bolts with a block. Position the indoor unit flat using a level indicator to prevent leaks.

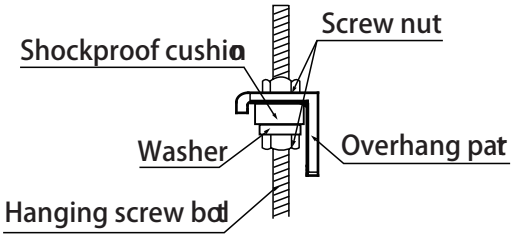

Note: Confirm the minimum drain tilt is 1/100 or more.

3.3 Duct and accessories installation

1. Install the filter(optional) according to air inlet size.

2. Install the canvas tie-in between the body and duct.

3. The air inlet and air outlet duct should be far enough apart enough to a avoid air passage short-circuit.

4. Connect the duct according to the following diagram.

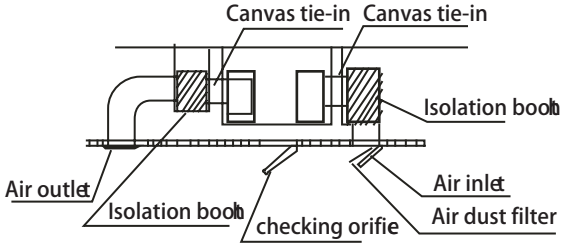

5. For DC motor models, you can change the fan motor static pressure according to external duct static pressure.

NOTE: 1. Do not put the connecting duct weight on the indoor unit.

2. When connecting the duct, use an nonflammable canvas tie-in to prevent vibrating.

3. When connecting duct, install in place prone to takedown for maintenance.

4. Change the fan motor static pressure corresponding to external duct static pressure.

5. If installed in place like meeting room where noise is easy to be perceived, design isolation booth and internal duct underlayer to muffle the duct system and weaken the air encounter noise in the duct.

3.4 Adjust the air inlet direction(From rear side to under-side.)

1. Take off ventilation panel and flange,

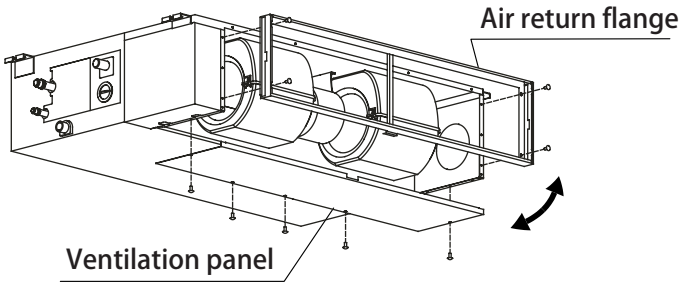

Bend the rear ventilation panel 90 degrees along the dotted line into a descending ventilation panel.(some models)

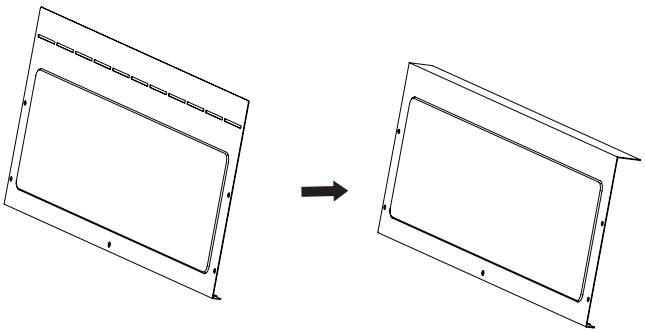

2. Change the mounting positions of ventilation panel and air return flange .

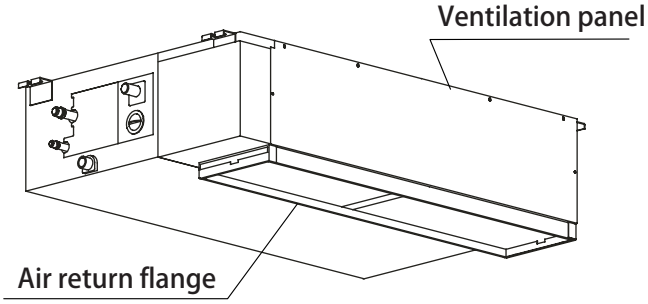

3. When installing the filter mesh, fit it into the flange as illustrated in the following figure.

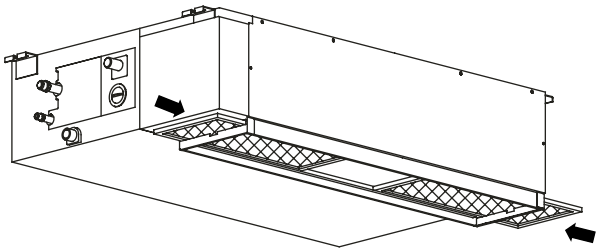

or

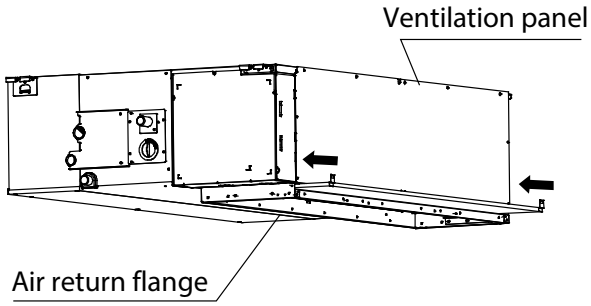

NOTE: All the figures in this manual are for demonstration purposes only. The air conditioner you have purchased may be slightly different in design, though similar in shape.

3.5 Fresh air duct installation

Dimension :

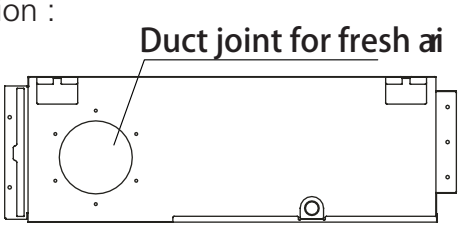

9-12k

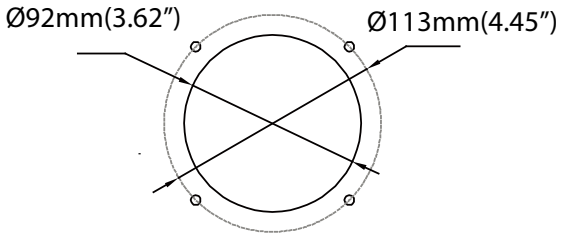

18-60k

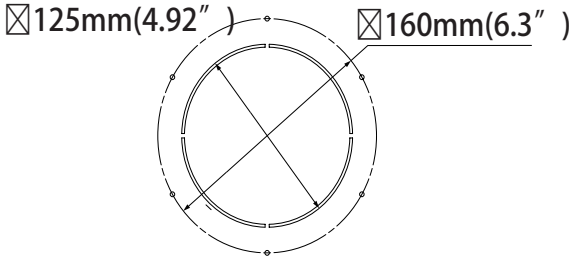

3.6 Horizontal Installation

3.6.1 With External pump (9K, 12K models)

Cut both ends of the rubber hose into a straight one, use it to connect the drain Connector A and the external pump and safety it with clamps on both ends. Then connect the drainpipe to the Connector B.

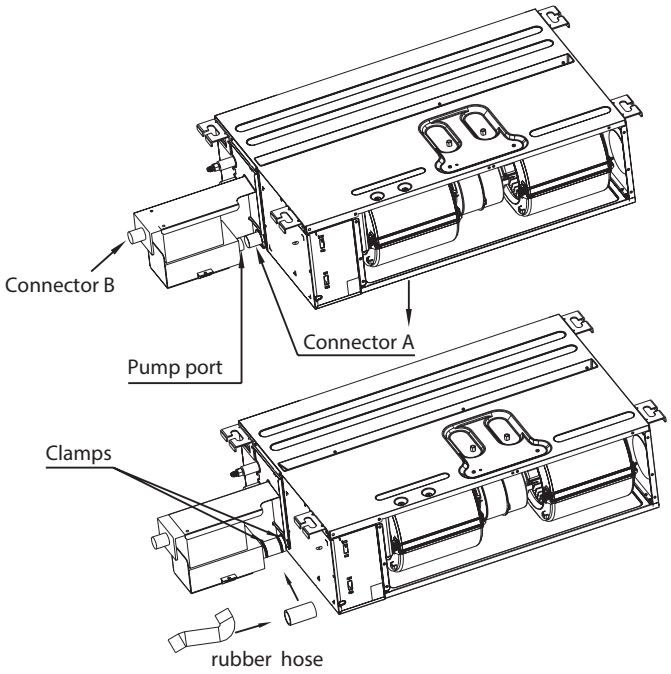

3.6.2 With External pump (18K model only)

Drain connector A, B & C are covered with caps originally. Take the cap on drain connector B off, connect the external pump to drain connector B using a hose & two hoseclamps. Then connect the drainpipe to the connector D.

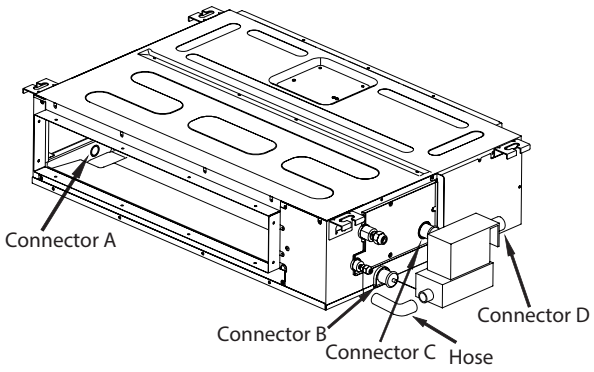

Plug the external pump to the "PUMP" pin and the water level sensor to the "CN5" to enable the pump.

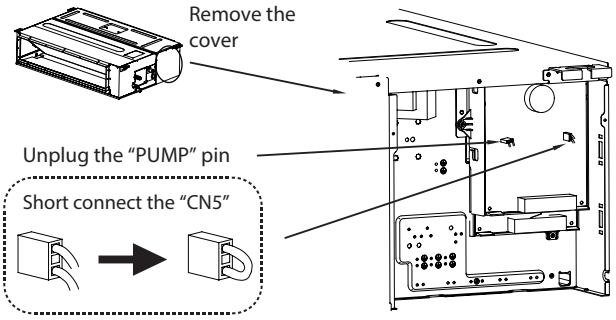

Fig. 1

3.6.3 With Built-in pump (24K, 36K, 48K models)

Drain connector A, B & C are covered with caps originally. Connect the drainpipe to the connector D.

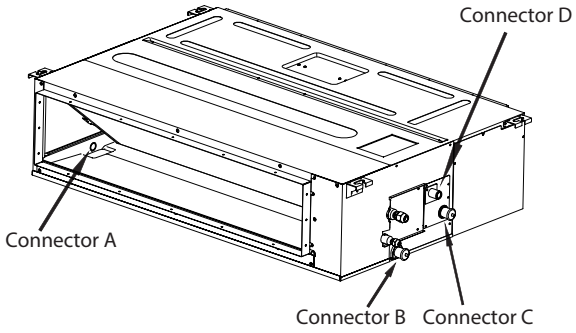

3.7 Vertical Installation

3.7.1 No need pump (Disable pump)

The pump must be disabled while the unit is installed vertically or the pump assembly is removed from its original position.

Open the cover of E-Parts Box assembly, unplug the "PUMP" pin to disable the pump function, and short connect "CN5" plug to disable the water level sensor. (see Fig. 1)

3.7.2 Drain pipe connecting

When installed vertically (up flow), the pump must be disabled firstly. Follow the 3.7.1 steps to disable the pump. For the unit with external pump (9K ,12K &18K models), the whole pump assembly can be removed. Then take the cap on drain connector off and connect the drainpipe to drain connector .

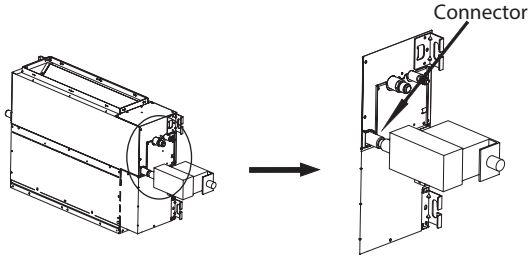

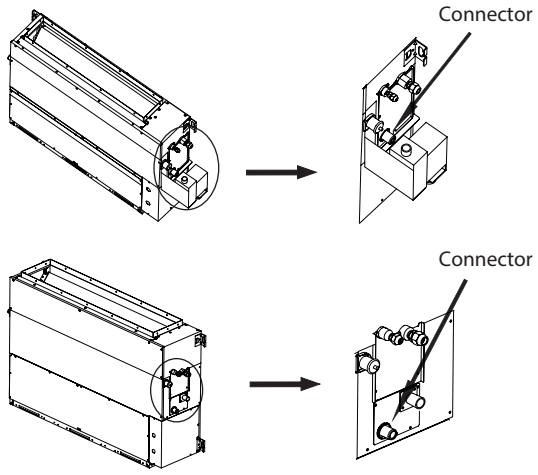
Connector
Connector

3. Indoor Unit Installation(Floor Ceiling Type)

3.1 Service space for indoor unit

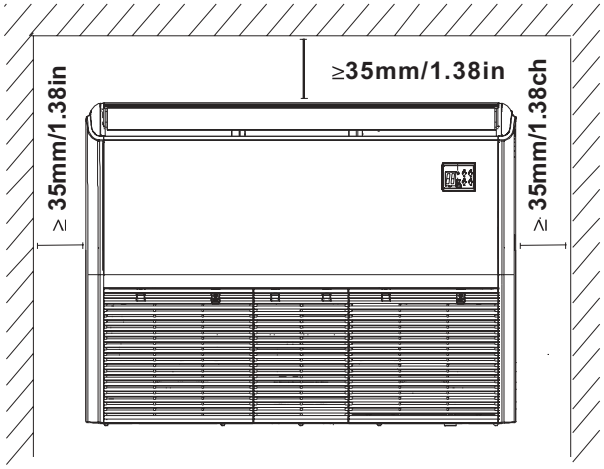

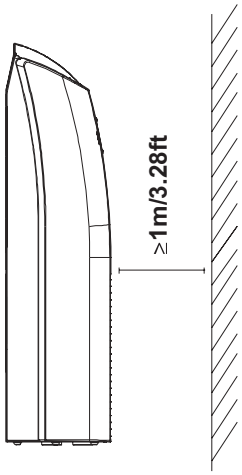

3.2 Bolt Pitch

Ceiling Installation

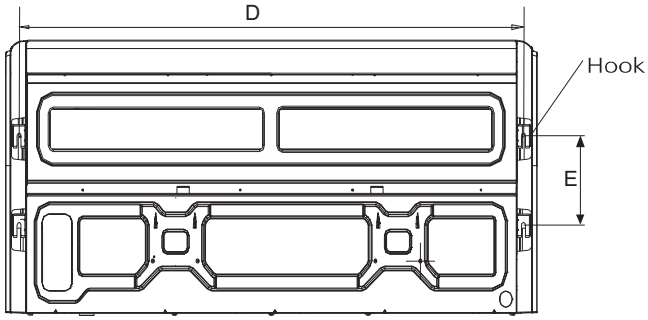

Capacity(kBtu/h)	Length of D (mm/inch)	Length of E (mm/inch)
18~24	983/38.7	220/8.7
36~60	1565/61.6	220/8.7

Wall-Mounted Installation

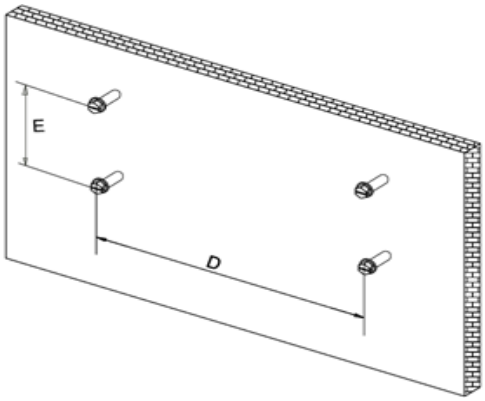

3.3 Hang Indoor Unit

1. The installation of hanging screw bolts.
   - Cut off the roof beam.
   - Strengthen the area at which the cut was made and consolidate the roof beam.
2. After the selection of the installation location, position the refrigerant pipes, drain pipes, and indoor and outdoor wires to the connection points before mounting the machine.
3. Drill 4 holes 10cm (4") deep at the ceiling hook positions in the internal ceiling. Be sure to hold the drill at a 90° angle to the ceiling.
4. Secure the bolt using the included washers and nuts.
5. Install the four suspension bolts.
6. Mount the indoor unit. You will need two people to lift and secure it. Insert suspension bolts into the unit's hanging holes. Fasten them using the included washers and nuts

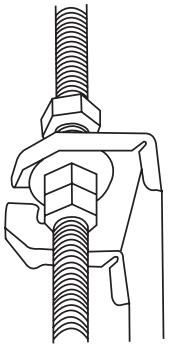

7. Remove the side board and the grille.

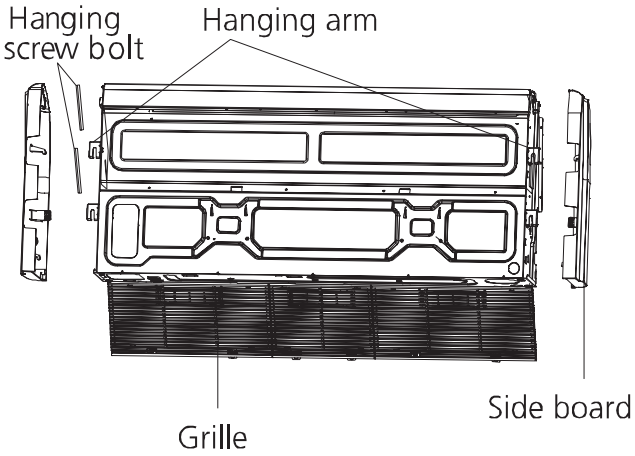

8. Mount the indoor unit onto the hanging screw bolts with a block.

Position the indoor unit on a flat level by using a level to prevent leaks.

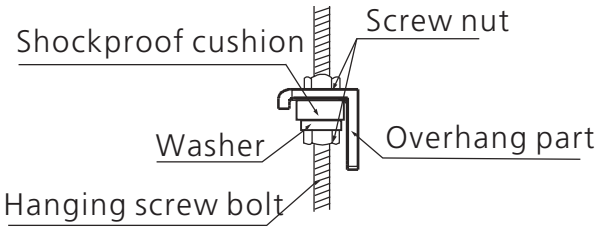

Note: Confirm the minimum drain tilt is 1/100 or more.

Ceiling Installation

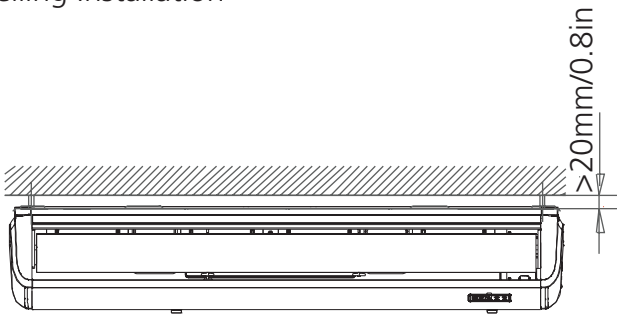

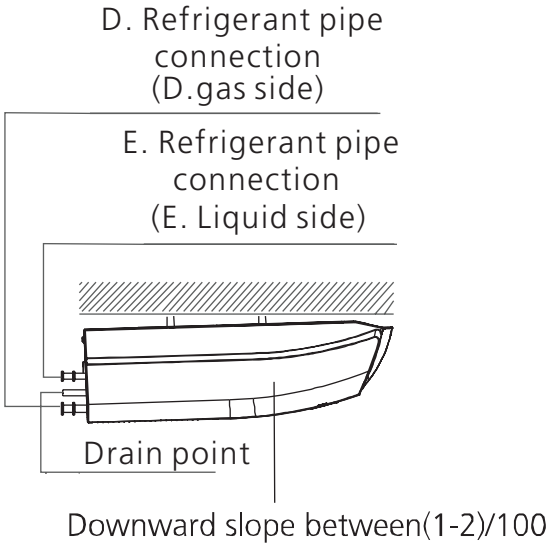

Wall-Mounted Installation

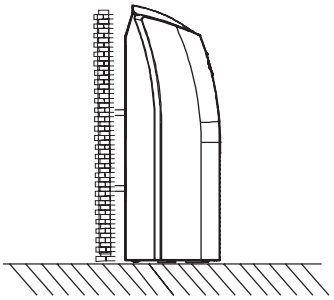

4. Outdoor unit installation

4.1 Service space for outdoor unit

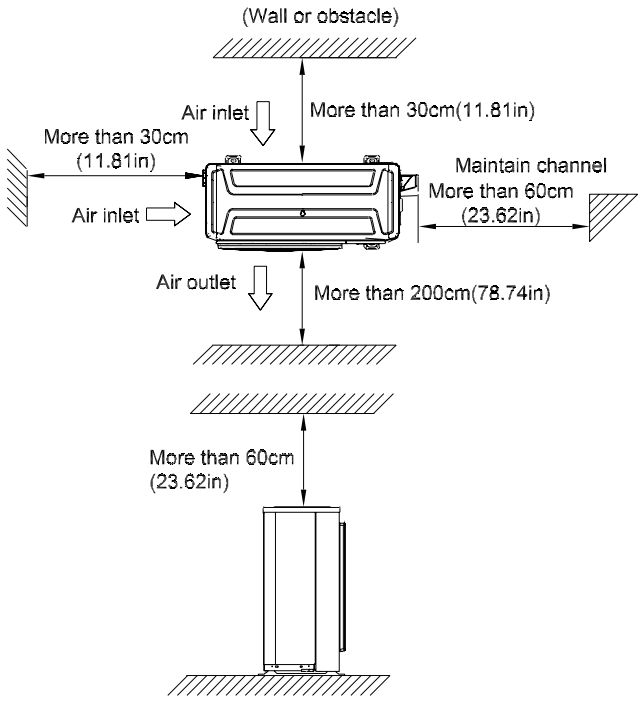

4.2 Bolt pitch

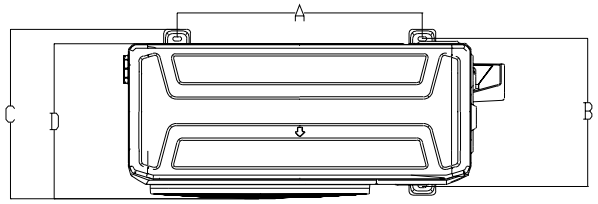

Panel Plate	Unit	D	A	B	C
B30	mm	333	514	340	365
	inch	13.11	20.23	13.39	14.37
CA30	mm	363	540	350	375
	inch	14.29	21.26	13.78	14.8
D30	mm	410	673	403	455
	inch	16.14	26.50	15.87	17.9
X2	mm	303	452	286	314
	inch	11.93	17.80	11.26	12.36
X3	mm	330	511	317	346
	inch	12.99	20.12	12.48	13.62
X4	mm	342	663	354	394
	inch	13.46	26.1	13.94	15.5
E30	mm	415	634	404	457
	inch	16.34	24.96	15.9	17.99
590	mm	350	590	378	400
	inch	13.78	23.23	14.88	15.75

4.3 Install Outdoor Unit

Fix the outdoor unit with anchor bolts(M10)

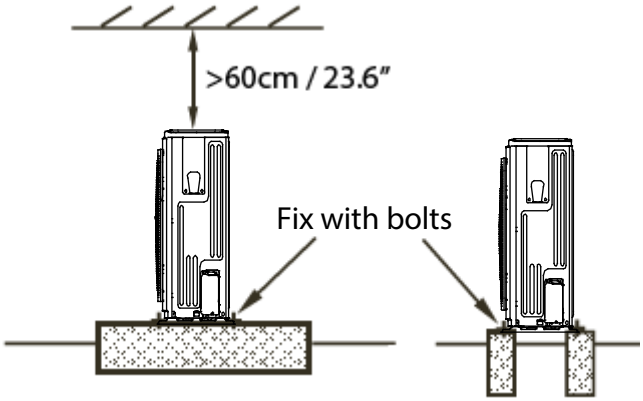

Caution

Since the gravity center of the unit is not at its physical center, so please be careful when lifting it with a sling.

Never hold the inlet of the outdoor unit to prevent it from deforming.

Do not touch the fan with hands or other objects.

Do not lean it more than 45, and do not lay it sidelong.

Make concrete foundation according to the specifications of the outdoor units.

Fasten the feet of this unit with bolts firmly to prevent it from collapsing in case of earthquake or strong wind.

5. Drainage Pipe Installation

Install the drainage pipe as shown below and take measures against condensation. Improperly installation could lead to leakage and eventually wet furniture and belongings.

5.1 Installation principle

- Ensure at least 1/100 slope of the drainage pipe
- Adopt suitable pipe diameter
- Adopt nearby condensate water discharge

5.2 Key points of drainage water pipe installation

1. Considering the pipeline route and elevation.
   - Before installing condensate water pipeline, determine its route and elevation to avoid intersection with other pipelines and ensure slope is straight.
2. Drainage pipe selection
   - The drainage pipe diameter shall not small than the drain hose of indoor unit
   - According to the water flowrate and drainage pipe slope to choose the suitable pipe, the water flowrate is decided by the capacity of indoor unit.

Relationship between water flowrate and capacity of indoor unit

Capacity (kBtu/h)	Water flowrate (l/h)
12	2.4
18	4
24	6
30	7
36	8
42	10
48	12
60	14

According to the above table to calculate the total water flowrate for the confluence pipe selection.

For horizontal drainage pipe (The following table is for reference)

PVC pipe	Reference value of inner diameter of pipe (mm)	Allowable maximum water flowrate (l/h)		Remark
		Slope 1/50	Slope 1/100	
PVC25	20	39	27	For branch pipe
PVC32	25	70	50	
PVC40	31	125	88	Could be used for confluence pipe
PVC50	40	247	175	
PVC63	51	473	334	

Attention: Adopt PVC40 or bigger pipe to be the main pipe.

For Vertical drainage pipe (The following table is for reference)

PVC pipe	Reference value of inner diameter of pipe (mm)	Allowable maximum water flowrate (l/h)	Remark
PVC25	20	220	For branch pipe
PVC32	25	410	
PVC40	31	730	Could be used for confluence pipe
PVC50	40	1440	
PVC63	51	2760	
PVC75	67	5710	
PVC90	77	8280	

Attention: Adopt PVC40 or bigger pipe to be the main pipe.

3. Individual design of drainage pipe system
   - The drainage pipe of air conditioner shall be installed separately with other sewage pipe, rainwater pipe and drainage pipe in building.
   - The drainage pipe of the indoor unit with water pump should be apart from the one without water pump.
4. Supporter gap of drainage pipe
   - In general, the supporter gap of the drainage pipe horizontal pipe and vertical pipe is respectively 1m~1.5m and 1.5m~2.0m.
   - Each vertical pipe shall be equipped with not less than two hangers.
   - Overlarge hanger gap for horizontal pipe shall create bending, thus leading to air block.

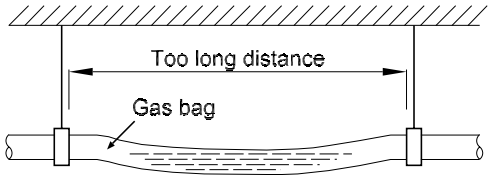

5. The horizontal pipe layout should avoid converse flow or bad flow

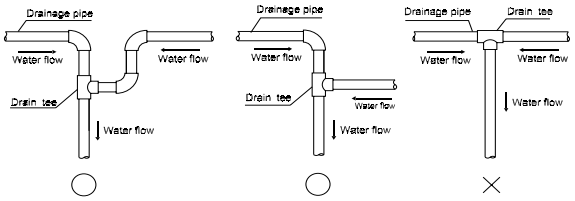

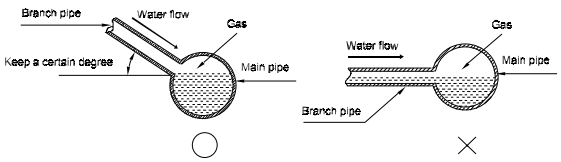

- The correct installation will not cause converse water flow and the slope of the branch pipes can be adjusted freely
- The false installation will cause converse water flow and the slope of the branch pipe can not be adjusted.

6. Water storage pipe setting

- If the indoor unit has high extra static pressure and without water pump to elevate the condensate water, such as high extra static pressure duct unit , the water storage pipe should be set to avoid converse flow or blow water phenomena.

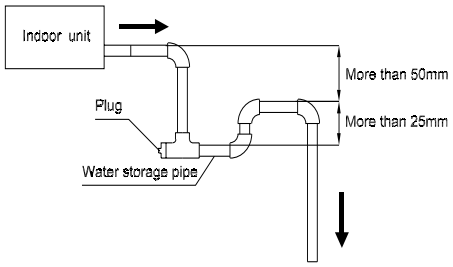

7. Lifting pipe setting of indoor unit with water pump

- The length of lifting pipe should not exceed 750mm/29.5in;

The drainage pipe should be set down inclined after the lifting pipe immediately to avoid wrong operation of water level switch.

- Refer the following picture for installation reference.

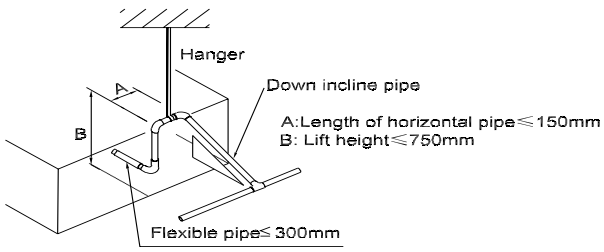

8. Blowhole setting

- For the concentrated drainage pipe system, there should design a blowhole at the highest point of main pipe to ensure the condensate water discharge smoothly.
- The air outlet shall face down to prevent dirt entering pipe.
- Each indoor unit of the system should be installed it.
- The installation should be considering the convenience for future cleaning.

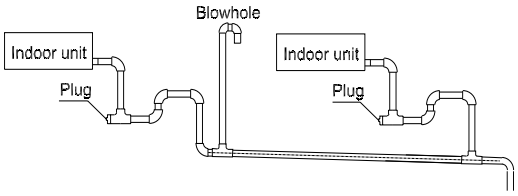

9. The end of drainage pipe shall not contact with ground directly.

5.3 Insulation work of drainage pipe

Refer the introduction to the insulation engineering parts.

6. Refrigerant Pipe Installation

6.1 Maximum length and drop height

Ensure that the length of the refrigerant pipe, the number of bends, and the drop height between the indoor and outdoor units meets the requirements shown in the following table.

For North America, Australia and Europe 3D Inverter models:

Capacity(kBtu/h)	Max. Length (m/ft)	Max. Elevation (m/ft)
<15	25/82	10/32.8
15-23	30/98.4	20/65.6
24~35	50/164	25/82
36~60	75/246.06	30/98.4

For other models:

Capacity(kBtu/h)	Max. Length (m/ft)	Max. Elevation (m/ft)
12	15/49	8/26
18-24	25/82	15/49
30-36	30/98.4	20/65.6
42~60	50/164	30/98.4

Caution:

1. The capacity test is based on the standard length and the maximum permissive length is based on the system reliability.

2. Oil traps

-If oil flows back into the outdoor unit's compressor, this might cause liquid compression or deterioration of oil return. Oil traps in the rising gas piping can prevent this.

-An oil trap should be installed every 6m(20ft) of vertical suction line riser (<36000Btu/h unit).

-An oil trap should be installed every 10m(32.8ft) of vertical suction line riser (≥36000Btu/h unit).

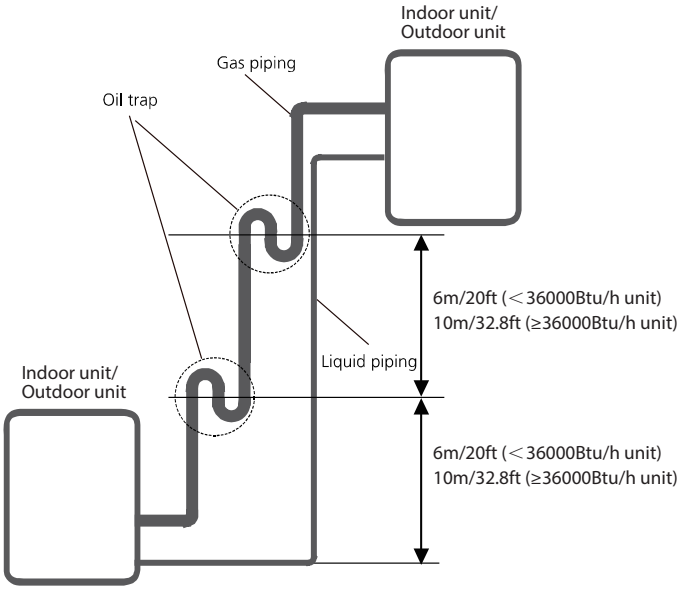

6.2 The procedure of connecting pipes

1.Choose the pipe size according to the specification table.

2.Confirm the cross way of the pipes.

3.Measure the necessary pipe length.

4.Cut the selected pipe with pipe cutter

- Make the section flat and smooth.

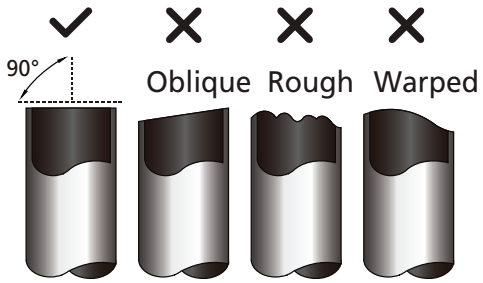

5. Insulate the copper pipe

- Before test operation, the joint parts should not be heat insulated.

6. Flare the pipe

- Insert a flare nut into the pipe before flaring the pipe
- According to the following table to flare the pipe.

Pipe diameter (inch(mm))	Flare dimension A (mm/inch)		Flare shape
	Min	Max	
1/4" (6.35)	8.4/0.33	8.7/0.34	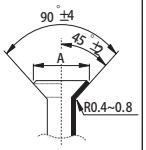
3/8" (9.52)	13.2/0.52	13.5/0.53	
1/2" (12.7)	16.2/0.64	16.5/0.65	
5/8" (15.9)	19.2/0.76	19.7/0.78	
3/4" (19)	23.2/0.91	23.7/0.93	
7/8" (22)	26.4/1.04	26.9/1.06	

- After flared the pipe, the opening part must be seal by end cover or adhesive tape to avoid duct or exogenous impurity come into the pipe.

7. Drill holes if the pipes need to pass the wall.

8. According to the field condition to bend the pipes so that it can pass the wall smoothly.

9. Bind and wrap the wire together with the insulated pipe if necessary.

10. Set the wall conduit

11. Set the supporter for the pipe.

12. Locate the pipe and fix it by supporter

- For horizontal refrigerant pipe, the distance between supporters should not be exceed 1m.
- For vertical refrigerant pipe, the distance between supporters should not be exceed 1.5m.

13. Connect the pipe to indoor unit and outdoor unit by using two spanners.

- Be sure to use two spanners and proper torque to fasten the nut, too large torque will damage the bellmouthing, and too small torque may cause leakage. Refer the following table for different pipe connection.

Pipe Diameter	Torque	Sketch map
	N.m(lb.ft)	
1/4" (6.35)	15~16 (11~11.8)	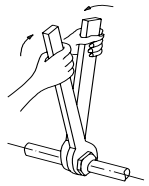
3/8" (9.52)	25~26 (18.4~19.18)	
1/2" (12.7)	35~36 (25.8~26.55)	
5/8" (15.9)	45~47 (33.19~34.67)	
3/4" (19)	65~67 (47.94~49.42)	
7/8" (22)	75-85 (55.3-62.7)	

7. Vacuum Drying and Leakage Checking

7.1 Purpose of vacuum drying

- Eliminating moisture in system to prevent the phenomena of ice-blockage and copper oxidation.

  Ice-blockage shall cause abnormal operation of system, while copper oxide shall damage compressor.
- Eliminating the non-condensable gas (air) in system to prevent the components oxidizing, pressure fluctuation and bad heat exchange during the operation of system.

7.2 Selection of vacuum pump

- The ultimate vacuum degree of vacuum pump shall be -756mmHg or above.
- Precision of vacuum pump shall reach 0.02mmHg or above.

7.3 Operation procedure for vacuum drying

Due to different construction environment, two kinds of vacuum drying ways could be chosen, namely ordinary vacuum drying and special vacuum drying.

7.3.1 Ordinary vacuum drying

1. When conduct first vacuum drying, connect pressure gauge to the infusing mouth of gas pipe and liquid pipe, and keep vacuum pump running for 1hour (vacuum degree of vacuum pump shall be reached -755mmHg).

2. If the vacuum degree of vacuum pump could not reach -755mmHg after 1 hour of drying, it indicates that there is moisture or leakage in pipeline system and need to go on with drying for half an hour.

3. If the vacuum degree of vacuum pump still could not reach -755mmHg after 1.5 hours of drying, check whether there is leakage source.

4 . Leakage test: After the vacuum degree reaches -755mmHg, stop vacuum drying and keep the pressure for 1 hour. If the indicator of vacuum gauge does not go up, it is qualified. If going up, it indicates that there is moisture or leak source.

7.3.2 Special vacuum drying

The special vacuum drying method shall be adopted when:

1. Finding moisture during flushing refrigerant pipe.

2. Conducting construction on rainy day, because rain water might penetrated into pipeline.

3. Construction period is long, and rain water might penetrated into pipeline.

4. Rain water might penetrate into pipeline during construction.

Procedures of special vacuum drying are as follows:

1. Vacuum drying for 1 hour.

2. Vacuum damage, filling nitrogen to reach 0.5Kgf/cm^2 .

Because nitrogen is dry gas, vacuum damage could achieve the effect of vacuum drying, but this method could not achieve drying thoroughly when there is too much moisture. Therefore, special attention shall be drawn to prevent the entering of water and the formation of condensate water.

3. Vacuum drying again for half an hour.

If the pressure reached -755mmHg, start to pressure leakage test. If it cannot reached the value, repeat vacuum damage and vacuum drying again for 1 hour.

4. Leakage test: After the vacuum degree reaches -755mmHg, stop vacuum drying and keep the pressure for 1 hour. If the indicator of vacuum gauge does not go up, it is qualified. If going up, it indicates that there is moisture or leak source.

8. Additional Refrigerant Charge

- After the vacuum drying process is carried out, the additional refrigerant charge process need to be performed.
- The outdoor unit is factory charged with refrigerant. The additional refrigerant charge volume is decided by the diameter and length of the liquid pipe between indoor and outdoor unit. Refer the following formula to calculate the charge volume.

	Diameter of liquid pipe (mm(inch))	Formula
R22/ R410A(Throttling part in the indoor unit)	6.35(1/4)	V=30(0.32)g/m(oz/ft)×(L-standard pipe length)
	9.52(3/8)	V=65(0.69)g/m(oz/ft)×(L-standard pipe length)
	12.7(1/2)	V=115(1.23)g/m(oz/ft)×(L-standard pipe length)
R22(Throttling part in the outdoor unit)	6.35(1/4)	V=15(0.16)g/m(oz/ft)×(L-standard pipe length)
	9.52(3/8)	V=30(0.32)g/m(oz/ft)×(L-standard pipe length)
	12.7(1/2)	V=60(0.64)g/m(oz/ft)×(L-standard pipe length)
R410A(Throttling part in the outdoor unit)	6.35(1/4)	V=15(0.16)g/m(oz/ft)×(L-standard pipe length)
	9.52(3/8)	V=30(0.32)g/m(oz/ft)×(L-standard pipe length)
	12.7(1/2)	V=65(0.69)g/m(oz/ft)×(L-standard pipe length)
R32	6.35(1/4)	V=12(0.13)g/m(oz/ft)×(L-standard pipe length)
	9.52(3/8)	V=24(0.26)g/m(oz/ft)×(L-standard pipe length)
	12.7(1/2)	V=40(0.42)g/m(oz/ft)×(L-standard pipe length)

V: Additional refrigerant charge volume.

L : The length of the liquid pipe.

Note:

- Refrigerant may only be charged after performed the vacuum drying process.
- Always use gloves and glasses to protect your hands and eyes during the charge work.
- Use electronic scale or fluid infusion apparatus to weight refrigerant to be recharged. Be sure to avoid extra refrigerant charged, it may cause liquid hammer of the compressor or protections.
- Use supplementing flexible pipe to connect refrigerant cylinder, pressure gauge and outdoor unit. And The refrigerant should be charged in liquid state. Before recharging, The air in the flexible pipe and manifold gauge should be exhausted.
- After finished refrigerant recharge process, check whether there is refrigerant leakage at the connection joint part.(Using gas leakage detector or soap water to detect).

9 . Engineering of Insulation

9.1 Insulation of refrigerant pipe

1. Operational procedure of refrigerant pipe insulation

Cut the suitable pipe → insulation (except joint section) → flare the pipe → piping layout and connection→ vacuum drying → insulate the joint parts

2. Purpose of refrigerant pipe insulation

- During operation, temperature of gas pipe and liquid pipe shall be over-heating or over-cooling extremely. Therefore, it is necessary to carry out insulation; otherwise it shall debase the performance of unit and burn compressor.
- Gas pipe temperature is very low during cooling. If insulation is not enough, it shall form dew and cause leakage.
- Temperature of gas pipe is very high (generally 50-100℃) during heating. Insulation work must be carried out to prevent hurt by carelessness touching.

3. Insulation material selection for refrigerant pipe

- The burning performance should over 120℃
- According to the local law to choose insulation materials
- The thickness of insulation layer shall be above 10mm.If in hot or wet environment place, the layer of insulation should be thicker accordingly.

4. Installation highlights of insulation construction

- Gas pipe and liquid pipe shall be insulated separately, if the gas pipe and liquid pipe were insulated together; it will decrease the performance of air conditioner.

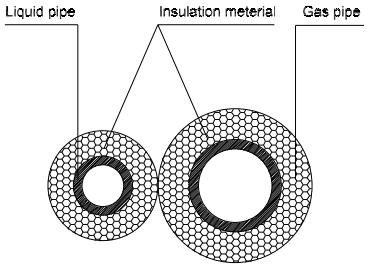

- The insulation material at the joint pipe shall be 5~10cm longer than the gap of the insulation material.
- The insulation material at the joint pipe shall be inserted into the gap of the insulation material.
- The insulation material at the joint pipe shall be banded to the gap pipe and liquid pipe tightly.
- The linking part should be use glue to paste together
- Be sure not bind the insulation material over-tight, it may extrude out the air in the material to cause bad insulation and cause easy aging of the material.

9.2 Insulation of drainage pipe

1. Operational procedure of refrigerant pipe insulation

Select the suitable pipe → insulation (except joint section) → piping layout and connection→ drainage test→ insulate the joint parts

2. Purpose of drainage pipe insulation

The temperature of condensate drainage water is very low. If insulation is not enough, it shall form dew and cause leakage to damage the house decoration.

3. Insulation material selection for drainage pipe

- The insulation material should be flame retardant material, the flame retardancy of the material should be selected according to the local law.
- Thickness of insulation layer is usually above 10mm.
- Use specific glue to paste the seam of insulation material, and then bind with adhesive tape. The width of tape shall not be less than 5cm. Make sure it is firm and avoid dew.

4. Installation and highlights of insulation construction

- The single pipe should be insulated before connecting to another pipe, the joint part should be insulated after the drainage test.
- There should be no insulation gap between the insulation material.

10. Engineering of Electrical Wring

1. Highlights of electrical wiring installation

- All field wiring construction should be finished by qualified electrician.
- Air conditioning equipment should be grounded according to the local electrical regulations.
- Current leakage protection switch should be installed.
- Do not connect the power wire to the terminal of signal wire.
- When power wire is parallel with signal wire, put wires to their own wire tube and remain at least 300mm gap.
- According to table in indoor part named "the specification of the power" to choose the wiring, make sure the selected wiring not small than the date showing in the table.
- Select different colors for different wire according to relevant regulations.
- Do not use metal wire tube at the place with acid or alkali corrosion, adopt plastic wire tube to replace it.
- There must be not wire connect joint in the wire tube If joint is a must, set a connection box at the place.
- The wiring with different voltage should not be in one wire tube.
- Ensure that the color of the wires of outdoor and the terminal No. are same as those of indoor unit respectively.

Table: Minimum Cross-Sectional Area able of Power and Signal Cables

For North America:

Rated Current of Appliance (A)	AWG
≤ 6	18
6 - 10	16
10 - 16	14
16 - 25	12
25 - 32	10

For the other regions:

Rated Current of Appliance (A)	Nominal Cross-Sectional Area(mm^2)
≤ 6	0.75
6 - 10	1
10 - 16	1.5
16 - 25	2.5
25 - 32	4
32 - 45	6

11. Test Operation

1. The test operation must be carried out after the entire installation has been completed.

2. Please confirm the following points before the test operation.

- The indoor unit and outdoor unit are installed properly.
- Piping and wiring are properly connected.
- Ensure that there are no obstacles near the inlet and outlet of the unit that might cause poor performance or product malfunction.
- The refrigeration system does not leak.
- The drainage system is unimpeded and draining to a safe location.
- The heating insulation is properly installed.
- The grounding wires are properly connected
- The length of the piping and the added refrigerant stow capacity have been recorded.
- The power voltage is the correct voltage for the air conditioner.

CAUTION: Failure to perform the test run may result in unit damage, property damage or personal injury.

3. Test Run Instructions

1. Open both the liquid and gas stop valves.

2. Turn on the main power switch and allow the unit to warm up.

3. Set the air conditioner to COOL mode, and check the following points.

Indoor unit

- Whether the switch on the remote controller works well.
- Whether the buttons on the remote controller works well.
- Whether the air flow louver moves normally.
- Whether the room temperature is adjusted well.
- Whether the indicator lights normally.
- Whether the temporary buttons works well.
- Whether the drainage is normal.
- Whether there is vibration or abnormal noise during operation.

Outdoor unit

- Whether there is vibration or abnormal noise during operation.
- Whether the generated wind, noise, or condensed of by the air conditioner have influenced your neighborhood.
- Whether any of the refrigerant is leaked.

4. Drainage Test

a. Ensure the drainpipe flow smoothly. New buildings should perform this test before finishing the ceiling.

b. Remove the test cover. Add 2000ml of water to the tank through the attached tube.

c. Turn on the main power switch and run the air conditioner in COOL mode.

d. Listen to the sound of the drain pump to see if it makes any unusual noises.

e. Check to see that the water is discharged. It may take up to one minute before the unit begins to drain depending on the drainpipe.

f. Make sure that there are no leaks in any of the piping.

g. Stop the air conditioner. Turn off the main power switch and reinstall the test cover.

Maintenance

Contents

1. First Time Installation Check 2

2 Refrigerant Recharge 4

3 Re-Installation 5

3.1 Indoor Unit 5

3.2 Outdoor Unit 7

1. First Time Installation Check

Air and moisture trapped in the refrigerant system affects the performance of the air conditioner by:

- Increasing pressure in the system.
- Increasing the operating current.
- Decreasing the cooling or heating efficiency.
- Congesting the capillary tubing due to ice build-up in the refrigerant circuit.
- Corroding the refrigerant system.

To prevent air and moisture from affecting the air conditioner's performance, the indoor unit, as well as the pipes between the indoor and outdoor unit, must be be leak tested and evacuated.

Leak test (soap water method)

Use a soft brush to apply soapy water or a neutral liquid detergent onto the indoor unit connections and outdoor unit connections. If there is gas leakage, bubbles will form on the connection.

Air purging with vacuum pump

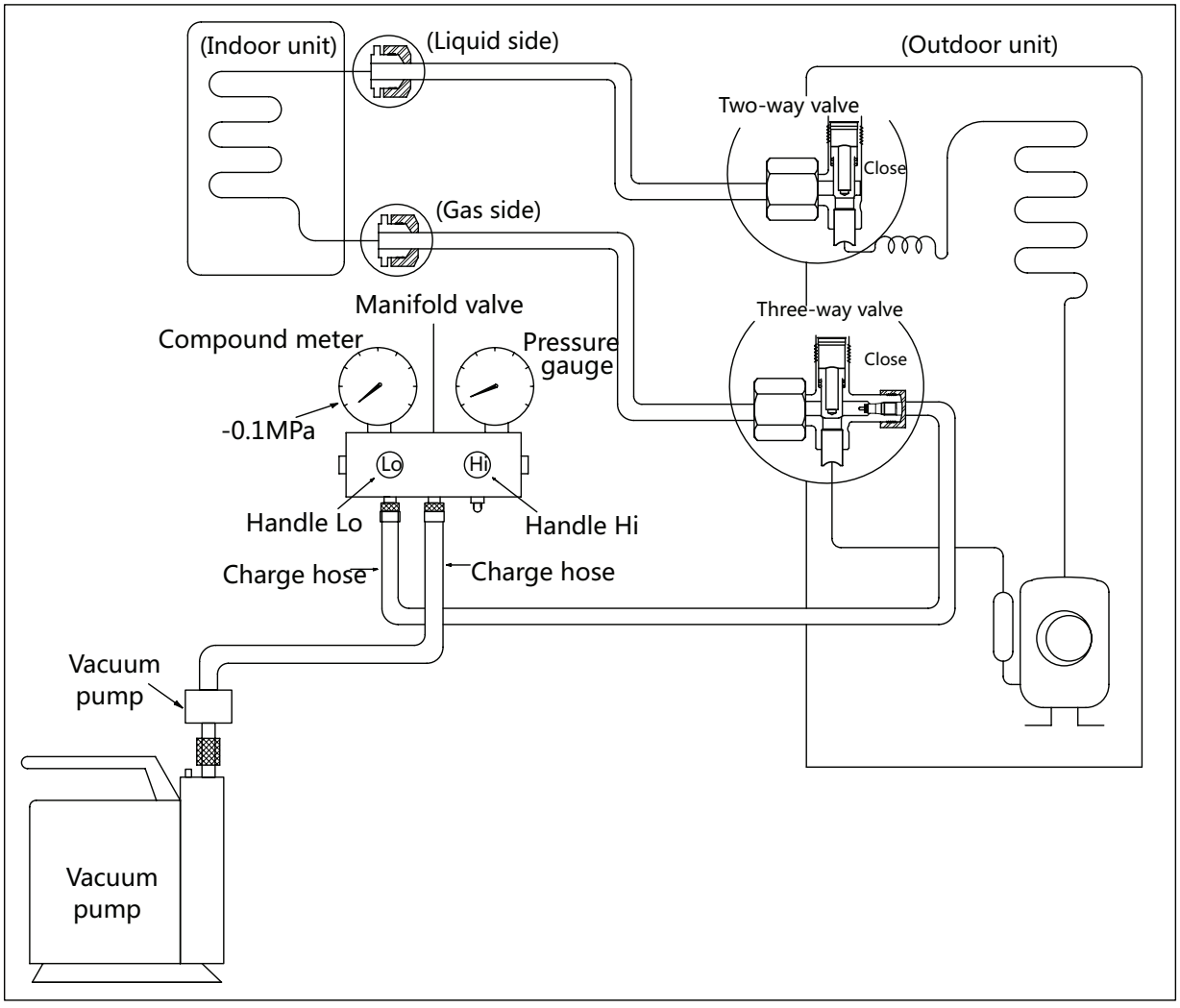

Procedure:

1. Tighten the flare nuts of the indoor and outdoor units, and confirm that both the 2- and 3-way valves are closed.
2. Connect the charge hose with the push pin of Handle Lo to the gas service port of the 3-way valve.
3. Connect another charge hose to the vacuum pump.
4. Fully open the Handle Lo manifold valve.
5. Using the vacuum pump, evacuate the system for 30 minutes.
   a. Check whether the compound meter indicates -0.1 MPa (14.5 Psi).
      - If the meter does not indicate -0.1 MPa (14.5 Psi) after 30 minutes, continue evacuating for an additional 20 minutes.
      - If the pressure does not achieve -0.1 MPa (14.5 Psi) after 50 minutes, check for leakage.
      - If the pressure successfully reaches -0.1 MPa (14.5 Psi), fully close the Handle Lo valve, then cease vacuum pump operations.
   b. Wait for 5 minutes then check whether the gauge needle moves after turning off the vacuum pump. If the gauge needle moves backward, check wether there is gas leakage.
6. Loosen the flare nut of the 3-way valve for 6 or 7 seconds and then tighten the flare nut again.
   a. Confirm the pressure display in the pressure indicator is slightly higher than the atmospheric pressure.
   b. Remove the charge hose from the 3-way valve.
7. Fully open the 2- and 3-way valves and tighten the cap of the 2- and 3-way valves.

2. Refrigerant Recharge

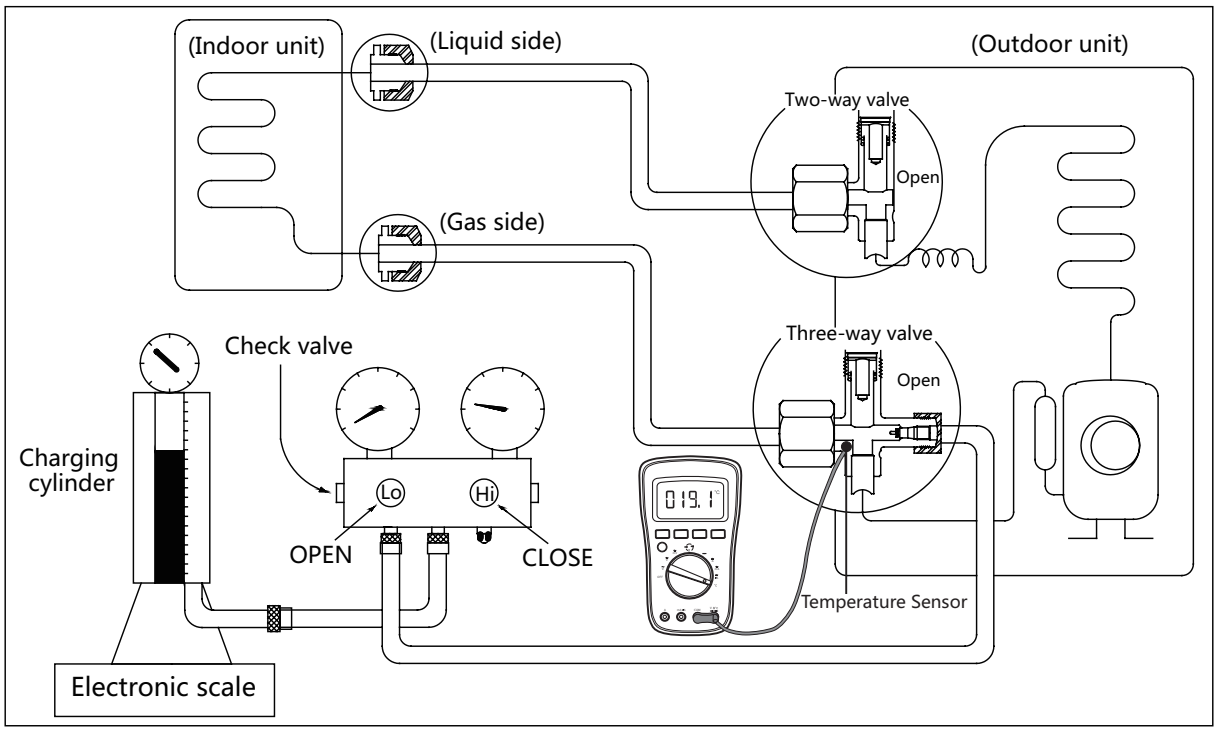

Procedure:

1. Close both 2- and 3-way valves.
2. Slightly connect the Handle Lo charge hose to the 3-way service port.
3. Connect the charge hose to the valve at the bottom of the cylinder.
4. If the refrigerant is R410A/R32, invert the cylinder to ensure a complete liquid charge.
5. Open the valve at the bottom of the cylinder for 5 seconds to purge the air in the charge hose, then fully tighten the charge hose with push pin Handle Lo to the service port of 3-way valve..
6. Place the charging cylinder onto an electronic scale and record the starting weight.
7. Fully open the Handle Lo manifold valve, 2- and 3-way valves.
8. Operate the air conditioner in cooling mode to charge the system with liquid refrigerant.
9. When the electronic scale displays the correct weight (refer to the gauge and the pressure of the low side to confirm, the value of pressure refers to chapter Appendix), turn off the air conditioner, then disconnect the charge hose from the 3-way service port immediately..
10. Mount the caps of service port and 2- and 3-way valves.
11. Use a torque wrench to tighten the caps to a torque of 18 N.m.
12. Check for gas leakage.

3. Re-Installation

3.1 Indoor Unit

Collecting the refrigerant into the outdoor unit

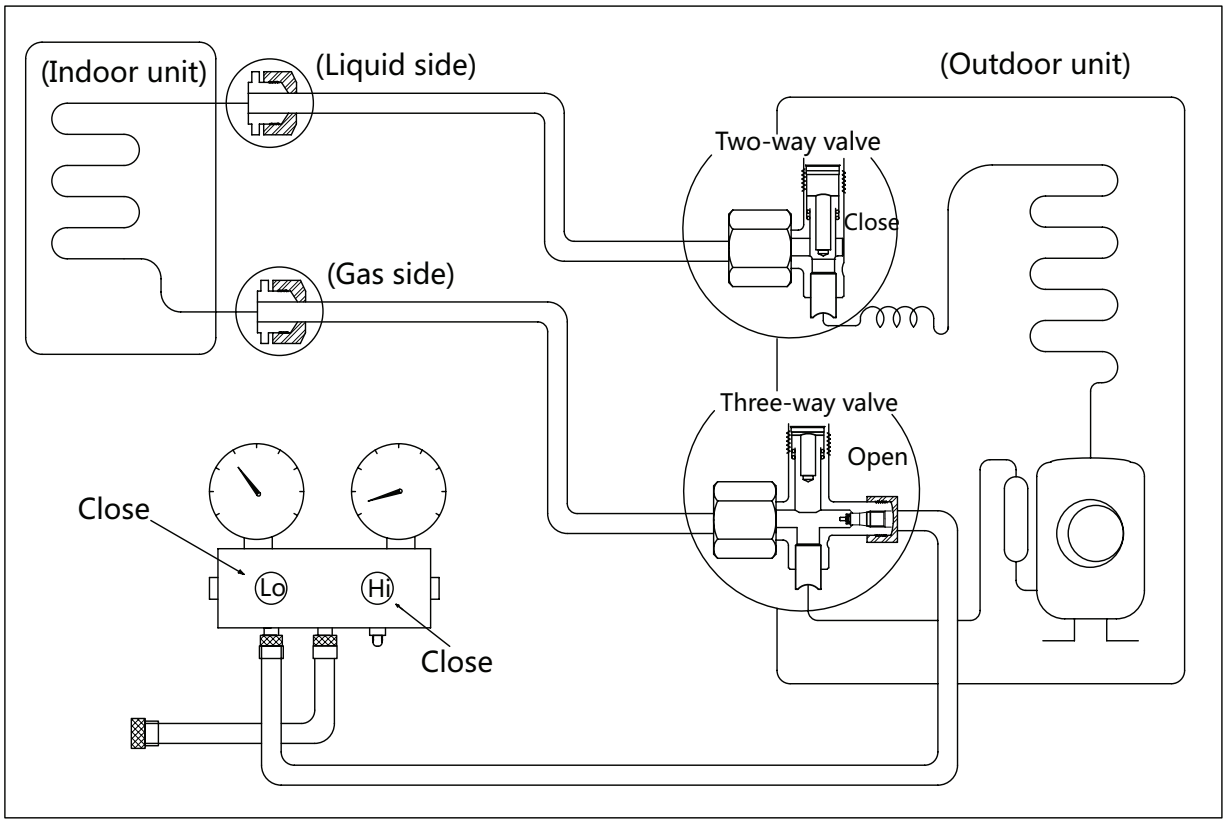

Procedure:

1. Confirm that the 2- and 3-way valves are opened.
2. Connect the charge hose with the push pin of Handle Lo to the 3-way valve's gas service port.
3. Open the Handle Lo manifold valve to purge air from the charge hose for 5 seconds and then close it quickly.
4. Close the 2-way valve.
5. Operate the air conditioner in cooling mode. Cease operations when the gauge reaches 0.1 MPa (14.5 Psi).
6. Close the 3-way valve so that the gauge rests between 0.3 MPa (43.5 Psi) and 0.5 MPa (72.5 Psi).
7. Disconnect the charge set and mount the caps of service port and 2- and 3-way valves.
8. Use a torque wrench to tighten the caps to a torque of 18 N.m.
9. Check for gas leakage.

Air purging with vacuum pump

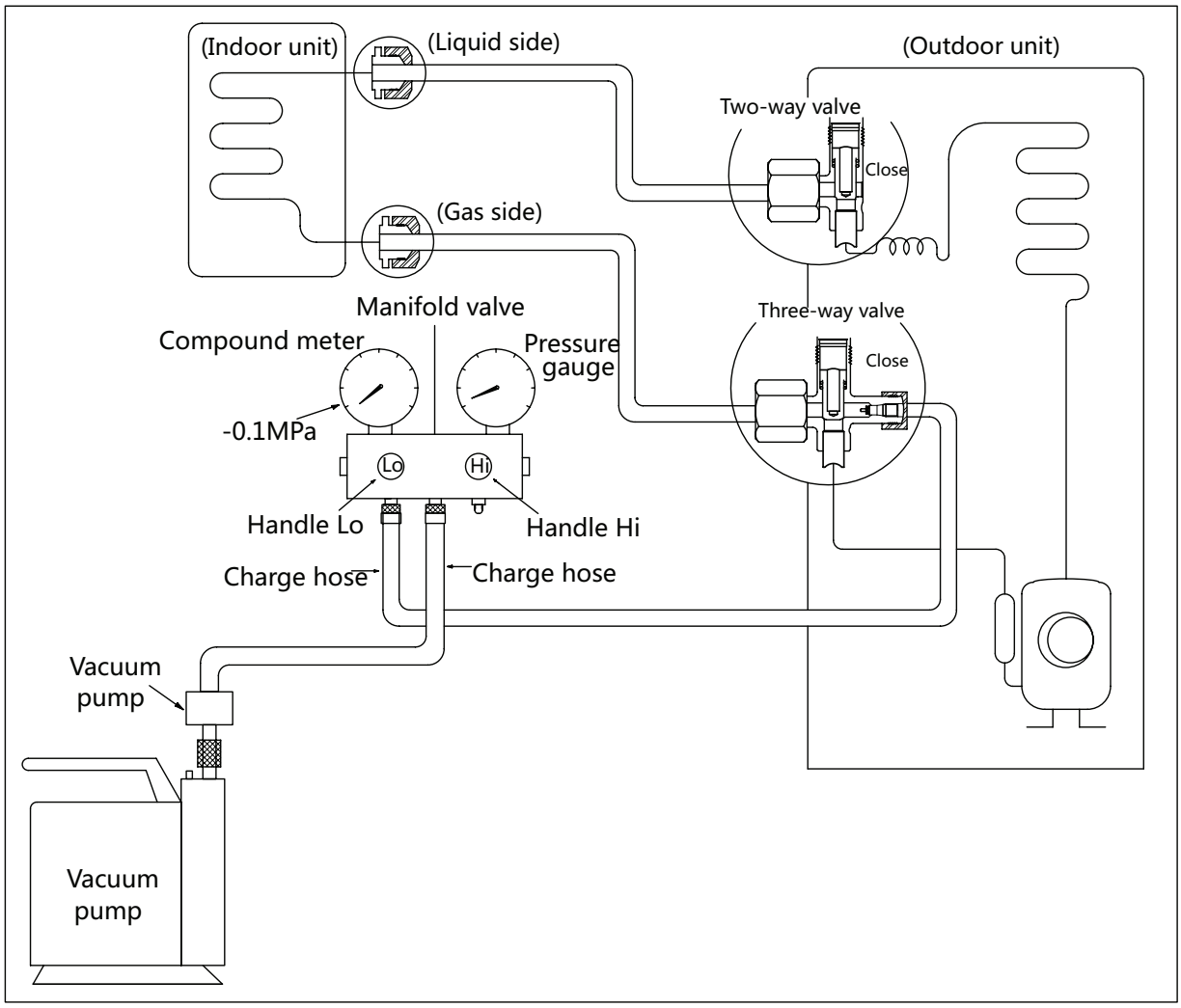

Procedure:

1. Tighten the flare nuts of the indoor and outdoor units, and confirm that both the 2- and 3-way valves are closed.
2. Connect the charge hose with the push pin of Handle Lo to the gas service port of the 3-way valve.
3. Connect another charge hose to the vacuum pump.
4. Fully open the Handle Lo manifold valve.
5. Using the vacuum pump, evacuate the system for 30 minutes.
   a. Check whether the compound meter indicates -0.1 MPa (14.5 Psi).
      - If the meter does not indicate -0.1 MPa (14.5 Psi) after 30 minutes, continue evacuating for an additional 20 minutes.
      - If the pressure does not achieve -0.1 MPa (14.5 Psi) after 50 minutes, check for leakage.
      - If the pressure successfully reaches -0.1 MPa (14.5 Psi), fully close the Handle Lo valve, then cease vacuum pump operations.

   b. Wait for 5 minutes then check whether the gauge needle moves after turning off the vacuum pump. If the gauge needle moves backward, check wether there is gas leakage.
6. Loosen the flare nut of the 3-way valve for 6 or 7 seconds and then tighten the flare nut again.
   a. Confirm the pressure display in the pressure indicator is slightly higher than the atmospheric pressure.
   b. Remove the charge hose from the 3-way valve.
7. Fully open the 2- and 3-way valves and tighten the cap of the 2- and 3-way valves.

3.2 Outdoor Unit

Evacuation for the whole system

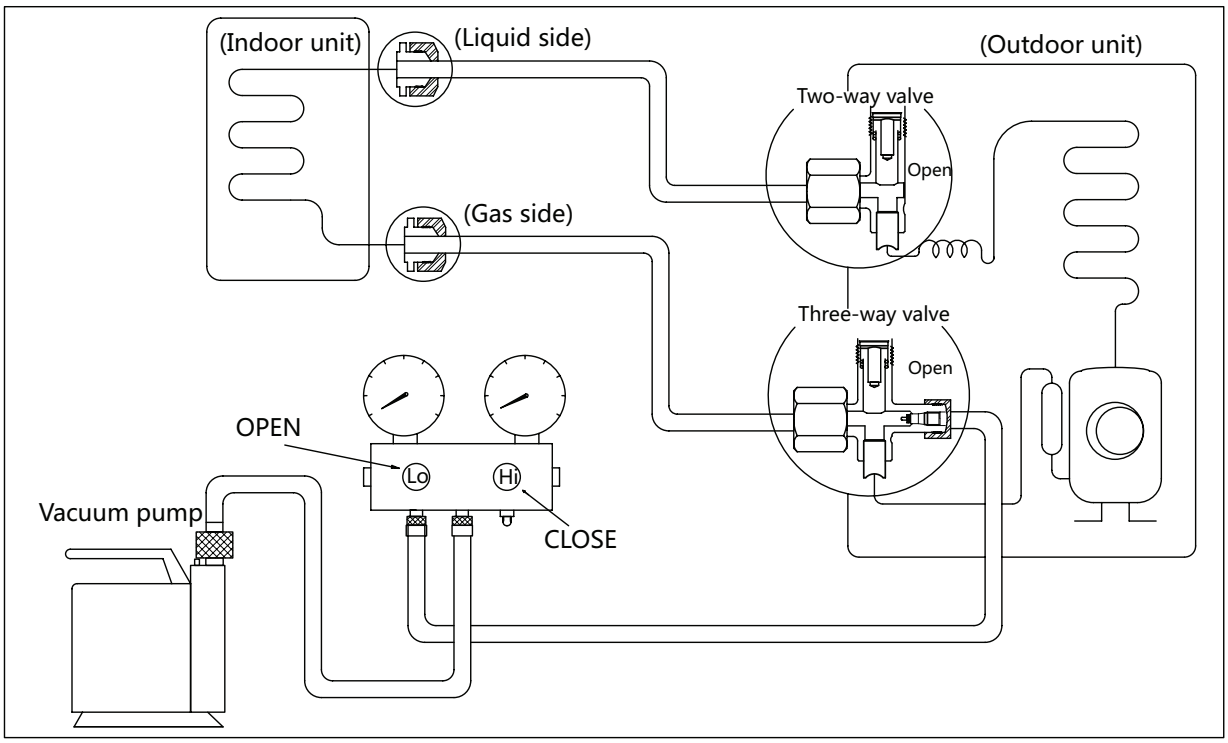

Procedure:

1. Confirm that the 2- and 3-way valves are opened.
2. Connect the vacuum pump to the 3-way valve's service port.
3. Evacuate the system for approximately one hour. Confirm that the compound meter indicates -0.1 MPa (14.5Psi).
4. Close the valve (Low side) on the charge set and turn off the vacuum pump.
5. Wait for 5 minutes then check whether the gauge needle moves after turning off the vacuum pump. If the gauge needle moves backward, check whether there is gas leakage.
6. Disconnect the charge hose from the vacuum pump.
7. Mount the caps of service port and 2- and 3-way valves.
8. Use a torque wrench to tighten the caps to a torque of 18 N.m.

Refrigerant charging

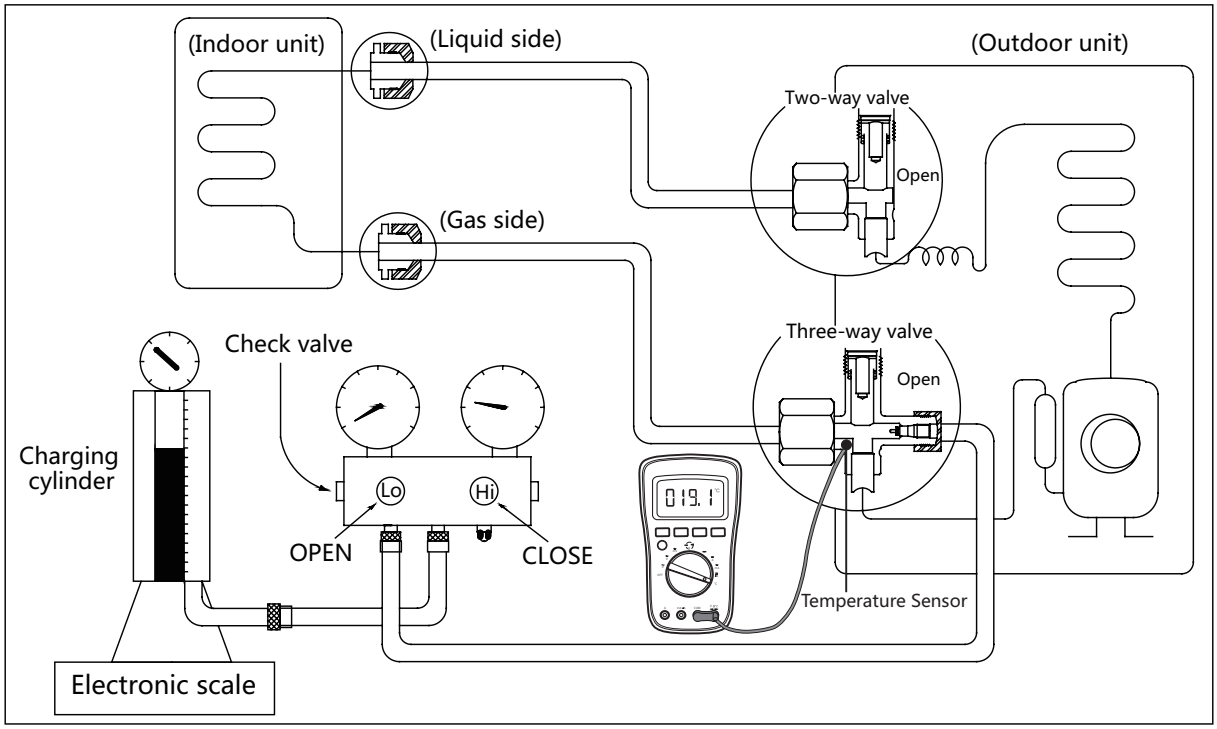

Procedure:

1. Close both 2- and 3-way valves.
2. Slightly connect the Handle Lo charge hose to the 3-way service port.
3. Connect the charge hose to the valve at the bottom of the cylinder.
4. If the refrigerant is R410A/R32, invert the cylinder to ensure a complete liquid charge.
5. Open the valve at the bottom of the cylinder for 5 seconds to purge the air in the charge hose, then fully tighten the charge hose with push pin Handle Lo to the service port of 3-way valve..
6. Place the charging cylinder onto an electronic scale and record the starting weight.
7. Fully open the Handle Lo manifold valve, 2- and 3-way valves.
8. Operate the air conditioner in cooling mode to charge the system with liquid refrigerant.
9. When the electronic scale displays the correct weight (refer to the gauge and the pressure of the low side to confirm, the value of pressure refers to chapter Appendix), turn off the air conditioner, then disconnect the charge hose from the 3-way service port immediately..
10. Mount the caps of service port and 2- and 3-way valves.
11. Use a torque wrench to tighten the caps to a torque of 18 N.m.
12. Check for gas leakage.

Note: 1. Mechanical connectors used indoors shall comply with local regulations.

2. When mechanical connectors are reused indoors, sealing parts shall be renewed. When flared joints are reused indoors, the flare part shall be re-fabricated.

Product Features

Contents

1. Display Function 2

2 Safety Features 5

3. Basic Functions 6

3.1 Table 6

3.2 Abbreviation 7

3.3 Fan Mode 7

3.4 Cooling Mode 7

3.5 Heating Mode(Heat Pump Units) 8

3.6 Auto-mode 9

3.7 Drying Mode 10

3.8 Forced Operation Function 10

3.9 Timer Function 10

3.10 Sleep Function 10

3.11 Auto-Restart Function 10

4. Optional Functions 11

5. Remote Controller Functions 12

5.1 Infrared Wireless Remote Controller 12

5.2 LCD Wired Remote Controller 16

5.3 Centralized Controller 32

5.4 Using the wire controller to set external static pressure(for duct type) 33

5.5 Using the wire controller to set airflow rate(for duct type) 33

1. Display Function

Floor Ceiling Type

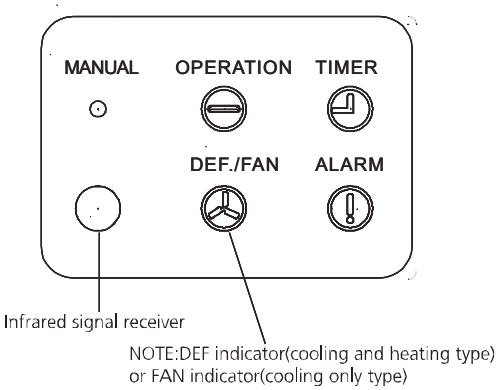

Display 1

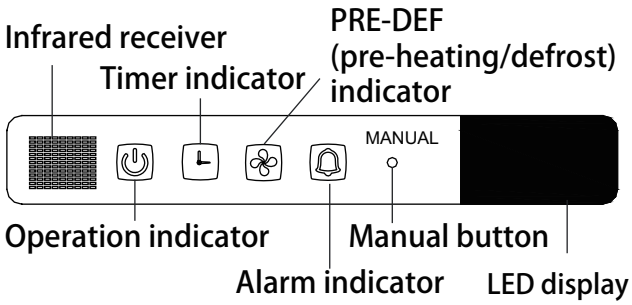

Display 2

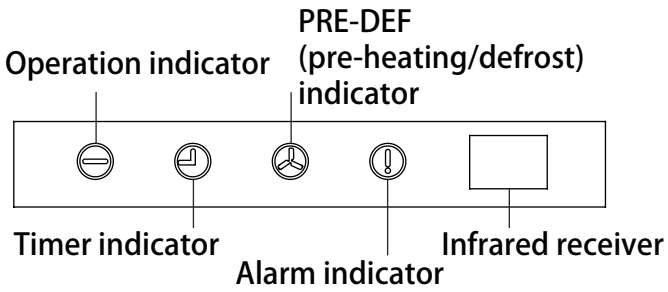

Display 3

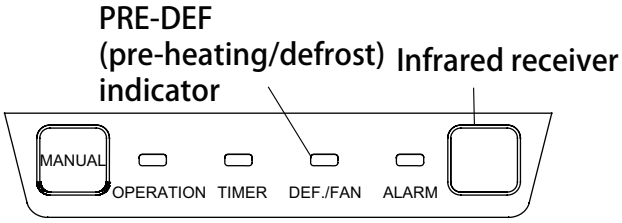

Display 4

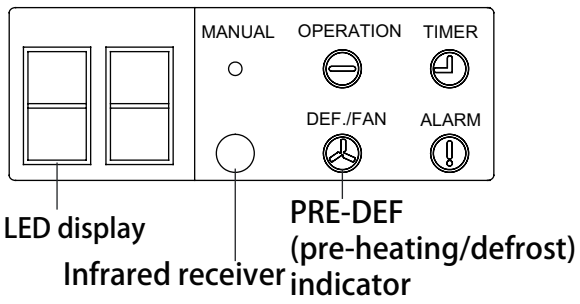

Display 5

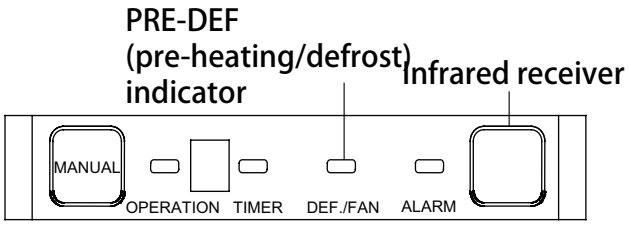

Display 6

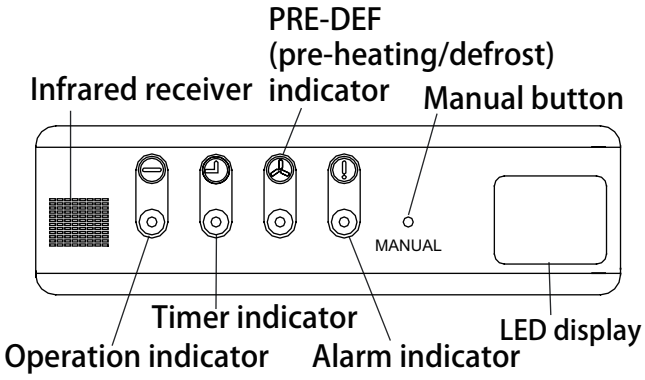

Display 7

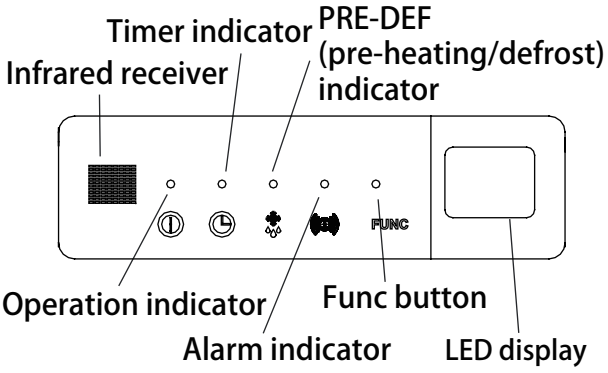

Display 8

Super-slim Cassette Type

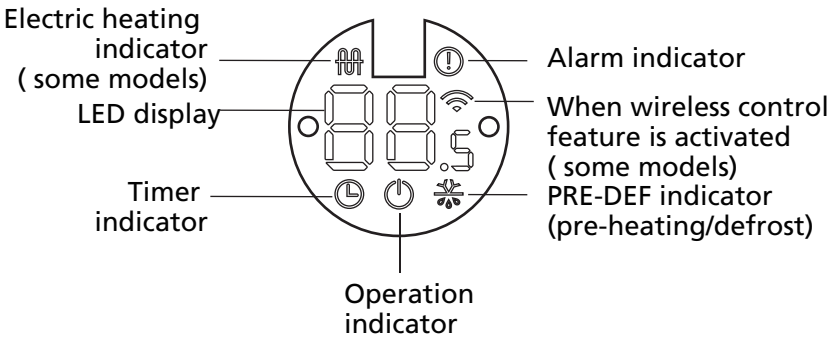

Duct Type

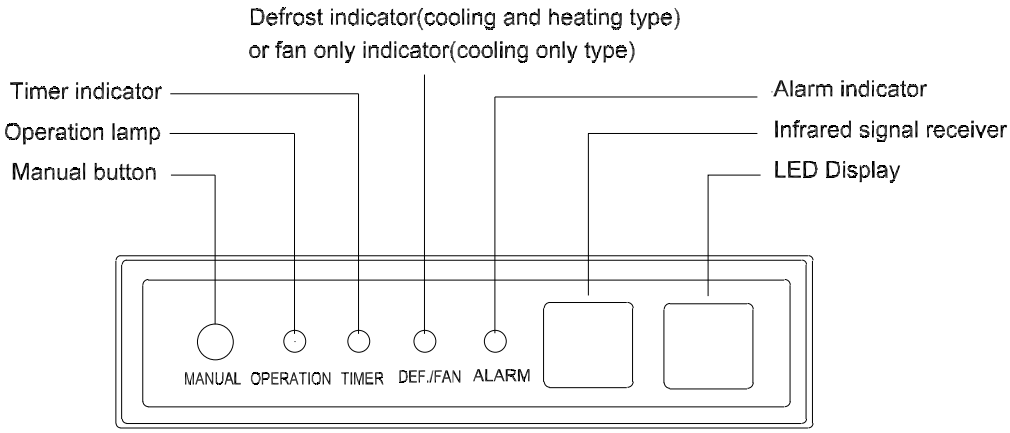

Compact Cassette Type

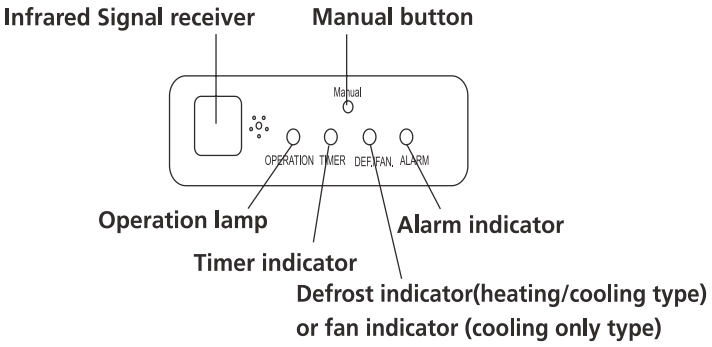

Console Type

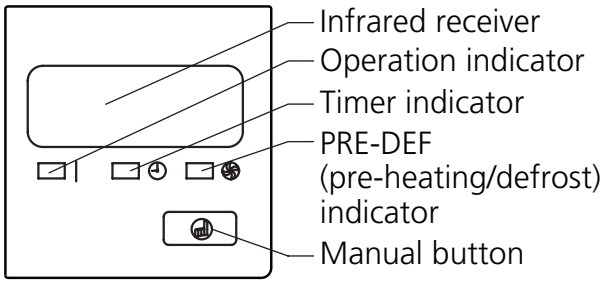

Display 1

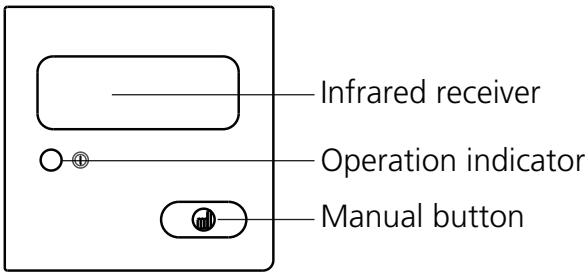

Display 2

Note: Please select the display function according to your purchase product.

2. Safety Features

Compressor three-minute delay at restart

Compressor functions are delayed for up to ten seconds upon the first startup of the unit, and are delayed for up to three minutes upon subsequent unit restarts.

Automatic shutoff based on discharge temperature

If the compressor discharge temperature exceeds a certain level for nine seconds, the compressor ceases operation.

Inverter module protection

The inverter module has an automatic shutoff mechanism based on the unit's current, voltage, and temperature. If automatic shutoff is initiated, the corresponding error code is displayed on the indoor unit and the unit ceases operation.

Indoor fan delayed operation

- When the unit starts, the louver is automatically activated and the indoor fan will operate after a period of setting time or the louver is in place.
- If the unit is in heating mode, the indoor fan is regulated by the anti-cold wind function.

Compressor preheating

Preheating is automatically activated when T4 sensor is lower than setting temperature.

Sensor redundancy and automatic shutoff

- If one temperature sensor malfunctions, the air conditioner continues operation and displays the corresponding error code, allowing for emergency use.
- When more than one temperature sensor is malfunctioning, the air conditioner ceases operation.

3. Basic Functions

3.1 Table

Functions		Cooling Mode&Heating mode		Heating Mode			
		Outdoor Fan Control		Defrosting Mode		Anti-cold Air Function	
Cases		Case 1: Compressor Frequency and T4	Case 2:T4	Case 1:T3 and T4,15 min	Case 2: T3,10 min	Case 1	Case 2
Type	Cassette	✓		✓			✓
	Console	✓		✓			✓
	Duct	✓		✓			✓
	Ceiling&floor	✓		✓			✓

Functions		Auto mode	
Cases		Case 1:	Case 2:
Type	Cassette		✓
	Console		✓
	Duct	✓	
	Ceiling&floor	✓	

Note: The detailed description of case 1 or case 2 is shown in the following function sections(from 3.4 to 3.6).

3.2 Abbreviation

Unit element abbreviations

Abbreviation	Element
T1	Indoor room temperature
T2	Coil temperature of evaporator
T3	Coil temperature of condenser
T4	Outdoor ambient temperature
TP	Compressor discharge temperature
Tsc	Adjusted setting temperature

In this manual, such as CDIFTEMP, HDIFTEMP2, TCE1, TCE2...etc., they are well-setting parameter of EEPROM.

3.3 Fan Mode

When fan mode is activated:

- The outdoor fan and compressor are stopped.
- Temperature control is disabled and no temperature setting is displayed.
- The indoor fan speed can be set to 1%~100%, or low, medium, high and auto.
- The louver operations are identical to those in cooling mode.
- Auto fan: In fan-only mode, AC operates the same as auto fan in cooling mode with the temperature set at 24°C.

3.4 Cooling Mode

3.4.1 Compressor Control

Reach the configured temperature:

1) When the compressor runs continuously for less than 120 minutes.
   - If the following conditions are satisfied, the compressor ceases operation.
     - Calculated frequency(fb) is less than minimum limit frequency(FminC).
     - Compressor runs at FminC more than ten minutes.
     - T1 is lower than or equal to (Tsc-CDIFTEMP-0.5°C)
2) When the compressor runs continuously for more than 120 minutes.
   - If the following conditions are satisfied, the compressor ceases operation.
     - Calculated frequency(fb) is less than minimum limit frequency(FminC).
     - Compressor runs at FminC more than 10 minutes.
     - When T1 is lower than or equal to (Tsc-CDIFTEMP).
3) If one of the following conditions is satisfied, not judge protective time.
   - Compressor running frequency is more than test frequency.
   - When compressor running frequency is equal to test frequency, T4 is more than 15°C or T4 fault.
   - Change setting temperature.
   - High or sleep function on/off
   - Various frequency limit shutdown occurs.

3.4.2 Indoor Fan Control

1) In cooling mode, the indoor fan operates continuously. The fan speed can be set to 1%-100%, or low, medium, high and auto.
2) Auto fan action in cooling mode:
   - Descent curve
     - When T1-Tsc is lower than or equal to 3.5°C, fan speed reduces to 80%(High);
     - When T1-Tsc is lower than or equal to 1°C, fan speed reduces to 60%(Medium);
     - When T1-Tsc is lower than or equal to 0.5°C, fan speed reduces to 40%(Low);
     - When T1-Tsc is lower than or equal to 0°C, fan speed reduces to 20%(Low);;
     - When T1-Tsc is lower than or equal to -0.5°C, fan speed reduces to 1%(Low);.
   - Rise curve
     - When T1-Tsc is higher than 0°C, fan speed increases to 20%(Low);;
     - When T1-Tsc is higher than 0.5°C, fan speed increases to 40%(Low);
     - When T1-Tsc is higher than 1°C, fan speed increases to 60%(Medium);
     - When T1-Tsc is higher than 1.5°C, fan speed increases to 80%(High);
     - When T1-Tsc is higher than 4°C, fan speed increases to 100%(High).

3.4.3 Outdoor Fan Control

Case 1:

- The outdoor unit will be run at different fan speed according to T4 and compressor frequency.
- For different outdoor units, the fan speeds are different.

Case 2:

- The outdoor unit will be run at different fan speed according to T4.
- For different outdoor units, the fan speeds are different.

3.4.4 Condenser Temperature Protection

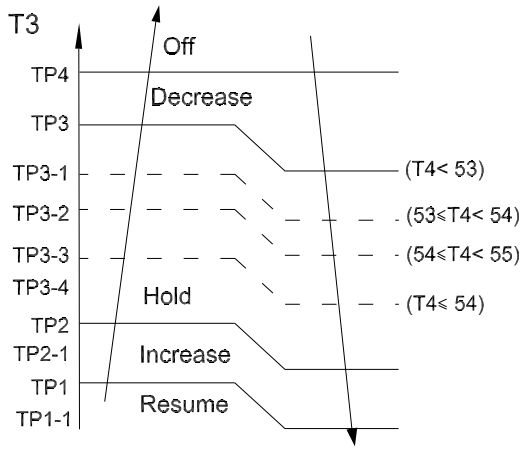

When the condenser temperature exceeds a configured value, the compressor ceases operation.

3.4.5 Evaporator Temperature Protection

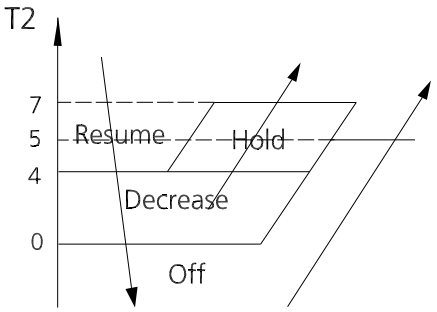

- Off: Compressor stops.
- Decrease: Decrease the running frequency to the lower level per 1 minute.
- Hold: Keep the current frequency.
- Resume: No limitation for frequency.

3.5 Heating Mode(Heat Pump Units)

3.5.1 Compressor Control

1) Reach the configured temperature

- If the following conditions are satisfied, the compressor ceases operation.
  - Calculated frequency(fb) is less than minimum limit frequency(FminH).
  - Compressor runs at FminH more than 10 minutes.
  - T1 is higher than or equal to Tsc+ HDIFTEMP2.

Note: HDIFTEMP2 is EEPROM setting parameter. It is 2°C usually.

- If one of the following conditions is satisfied, not judge protective time.
  - Compressor running frequency is more than test frequency.
  - Compressor running frequency is equal to test frequency, T4 is more than 15°C or T4 fault.
  - Change setting temperature.
  - High or sleep function on/off.

2) When the current is higher than the predefined safe value, surge protection is activated, causing the compressor to cease operations.

3.5.2 Indoor Fan Control:

1) In heating mode, the indoor fan operates continuously. The fan speed can be set to 1%-100%,or low, medium, high and auto.

- Anti-cold air function
  - The indoor fan is controlled by the indoor temperature T1 and indoor unit coil temperature T2.

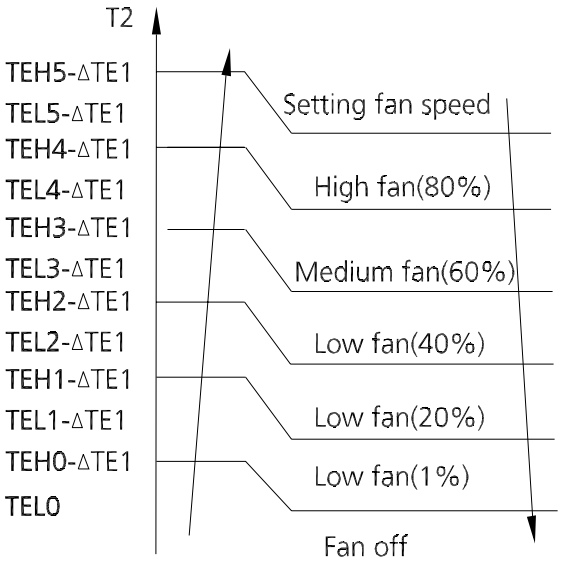

Case 1:

T1 ≥ 19°C(66.2°F)	ΔTE1=0
15°C(59°F) ≤ T1 <19°C(66.2°F)	ΔTE1=19°C−T1 (34.2°F-T1)
T1<15°C(59°F)	ΔTE1=4°C(7.2°F)

Case 2: ΔTE1=0

2) Auto fan action in heating mode:

- Rise curve
  - When T1-Tsc is higher than -1.5°C, fan speed reduces to 80%(High);
  - When T1-Tsc is higher than 0°C, fan speed reduces to 60%(Medium);
  - When T1-Tsc is higher than 0.5°C, fan speed reduces to 40%(Low);
  - When T1-Tsc is higher than 1°C, fan speed reduces to 20%(Low);.

- Descent curve
  - When T1-Tsc is lower than or equal to 0.5°C, fan speed increases to 40%(Low);
  - When T1-Tsc is lower than or equal to 0°C, fan speed increases to 60%(Medium);
  - When T1-Tsc is lower than or equal to -1.5°C, fan speed increases to 80%(high);
  - When T1-Tsc is lower than or equal to -3°C, fan speed increases to 100%(High)..

3.5.3 Outdoor Fan Control:

Case 1:

- The outdoor unit will be run at different fan speed according to T4 and compressor frequency.
- For different outdoor units, the fan speeds are different.

Case 2:

- The outdoor unit will be run at different fan speed according to T4.
- For different outdoor units, the fan speeds are different.

3.5.4 Defrosting mode

- The unit enters defrosting mode according to the temperature value of T3 and T4 as well as the compressor running time.
- In defrosting mode, the compressor continues to run, the indoor and outdoor motor will cease operation, the defrost light of the indoor unit will turn on, and the "dF" symbol is displayed.
- If any one of the following conditions is satisfied, defrosting ends and the machine switches to normal heating mode:
  - T3 rises above TCDE1.
  - T3 maintained above TCDE2 for 80 seconds.
  - Unit runs for 15 minutes consecutively in defrosting mode.
- If T4 is lower than or equal to -22°C and compressor running time is more than TIMING_DEFROST_TIME, if any one of the following conditions is satisfied, defrosting ends and the machine switches to normal heating mode:
  - Unit runs for 10 minutes consecutively in defrosting mode.
  - T3 rises above 10°C.

For some models:

- If any one of the following conditions is satisfied, the unit enters defrosting mode
  - If T3 or T4 is lower than -3°C for 30 seconds,Ts-T1 is lower than 5°C and compressor running time is more than EE_TIME_DEFROST7.
  - If T3 or T4 is lower than -3°C for 30 seconds and compressor running time is more than EE_TIME_DEFROST7+30.
- If any one of the following conditions is satisfied, defrosting ends and the machine switches to normal heating mode:
  - T3 rises above TCDE1+4°C.
  - T3 maintained above TCDE2+4°C for 80 seconds.
  - Unit runs for 15 minutes consecutively in defrosting mode.

3.5.5 Evaporator Coil Temperature Protection

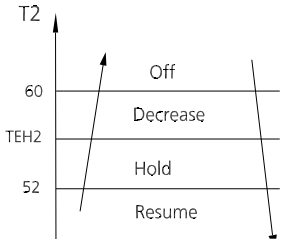

- Off: Compressor stops.
- Decrease: Decrease the running frequency to the lower level per 20 seconds.
- Hold: Keep the current frequency.
- Resume: No limitation for frequency.

3.6 Auto-mode

- This mode can be selected with the remote controller and the temperature setting can be adjusted between 16°C~30°C.

Case 1:

- In auto mode, the machine selects cooling, heating, or fan-only mode on the basis of **Δ**T (**Δ**T =T1-TS).

ΔT	Running mode
ΔT>2°C(3.6°F)	Cooling
-3℃(-5.4°F)≤ΔT≤2°C(3.6°F)	Fan-only
ΔT<-3°C(-5.4°F)	Heating*

Heating*: In auto mode, cooling only models run the fan

- Indoor fan will run at auto fan speed.
- The louver operates same as in relevant mode.
- If the machine switches mode between heating and cooling, the compressor will keep stopping for certain time and then choose mode according to **Δ**T.

Case 2:

In auto mode, the machine selects cooling, heating or fan-only mode on the basis of T1,Ts and T4.

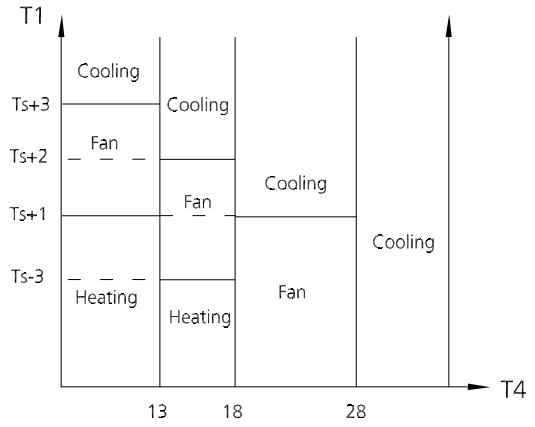

3.7 Drying mode

- In drying mode, AC operates the same as auto fan in cooling mode.
- All protections are activated and operate the same as they do that in cooling mode.
- Low Room Temperature Protection

If the room temperature is lower than 10°C, the compressor ceases operations and does not resume until room temperature exceeds 12°C.

3.8 Forced operation function

Press the AUTO/COOL button, the AC will run as below sequence:

Forced auto →Forced cooling →Off

- Forced cooling mode:

The compressor and outdoor fan continue to run and the indoor fan runs at breeze speed. After running for 30 minutes, the AC will switch to auto mode with a preset temperature of 24°C(76°F).

- Forced auto mode:

Forced auto mode operates the same as normal auto mode with a preset temperature of 24°C(76°F).

- The unit exits forced operation when it receives the following signals:
  - Switch off
  - Changes in:
    - mode
    - fan speed
    - sleep mode
    - Follow me

3.9 Timer Function

- The timing range is 24 hours.
- Timer On. The machine turns on automatically at the preset time.
- Timer Off. The machine turns off automatically at the preset time.
- Timer On/Off. The machine turns on automatically at the preset On Time, and then turns off automatically at the preset Off Time.
- Timer Off/On. The machine turns off automatically at the preset Off Time and then turns on automatically at the preset On Time.
- The timer does not change the unit operation mode. If the unit is off now, it does not start up immediately after the "timer off" function is set. When the setting time is reached, the timer LED switches off and the unit running mode remains unchanged.
- The timer uses relative time, not clock time

3.10 Sleep function

- The sleep function is available in cooling, heating, or auto mode.
- The operational process for sleep mode is as follows:
  - When cooling, the temperature rises 1°C (to not higher than 30°C/86°F) every hour. After 2 hours, the temperature stops rising and the indoor fan is fixed at low speed.
  - When heating, the temperature decreases 1°C(to not lower than 16°C/60.8°F) every hour. After 2 hours, the temperature stops decreasing and the indoor fan is fixed at low speed. Anti-cold wind function takes priority.
- The operating time for sleep mode is 8 hours, after which, the unit exits this mode.
- The timer setting is available in this mode.

3.11 Auto-Restart function

- The indoor unit has an auto-restart module that allows the unit to restart automatically. The module automatically stores the current settings and in the case of a sudden power failure, will restore those setting automatically within 3 minutes after power returns.

4. Optional Functions

4.1 8°C Heating

In heating mode, the temperature can be set to as low as 8°C, preventing the indoor area from freezing if unoccupied during severe cold weather.

4.2 Follow me

- If you press "Follow Me" on the remote, the indoor unit will beep. This indicates the follow me function is active.
- Once active, the remote control will send a signal every 3 minutes, with no beeps. The unit automatically sets the temperature according to the measurements from the remote control.
- The unit will only change modes if the information from the remote control makes it necessary, not from the unit's temperature setting.
- If the unit does not receive a signal for 7 minutes or you press "Follow Me," the function turns off. The unit regulates temperature based on its own sensor and settings.

4.3 Silence

- Press "Silence" or keep pressing Fan button for more than 2 seconds on the remote control to enable the SILENCE function. While this function is active, the compressor frequency is maintained at a lower level than F3. The indoor unit will run at faint breeze(1%), which reduces noise to the lowest possible level.
- When match with multi outdoor unit, this function is disabled.

4.4 ECO Function

- Used to enter the energy efficient mode.
  - Under cooling mode, press ECO button, the remote controller will adjust the temperature automatically to 24°C/75°F, fan speed of Auto to save energy (but only if the set temperature is less than 24°C/75°F). If the set temperature is more than 24°C/75°F and 30°C/86°F, press the ECO button, the fan speed will change to Auto, the set temperature will remain unchanged.
- When pressing the ECO button, or modifying the mode or adjusting the set temperature to less than 24°C/75°F, the AC will quit the ECO operation.
- Operation time in ECO mode is 8 hours. After 8 hours the AC quits this mode.

4.5 Electrical energy consumption control function (Optional)

Press the "Gear" button on remote controller to enter the energy efficient mode in a sequence of following:

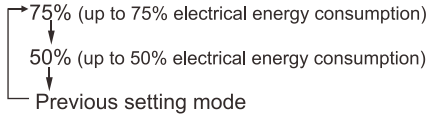

Turn off the unit or activate ECO, sleep, Super cool, 8°C Heating, Silence or self clean function will quit this function.

4.6 Breeze Away function (for some models)

- This feature avoids direct airflow blowing on the body and makes you feel indulging in silky coolness.
- NOTE: This feature is available under cooling mode, fan-only mode and drying mode.

4.7 Active Clean function

- The Active Clean Technology washes away dust, mold, and grease that may cause odors when it adheres to the heat exchanger by automatically freezing and then rapidly thawing the frost. The internal wind wheel then keeps operating to blow-dry the evaporator, thus preventing the growth of mold and keeping the inside clean.
- When this function is turned on, the indoor unit display window appears "CL", after 20 to 45 minutes, the unit will turn off automatically and cancel Active Clean function.

5. Remote Controller Functions

5.1 Infrared Wireless Remote Controller

5.1.1 RG10A(B2S)/BGEF (Standard for some units)

Remote Controller Specifications

Model	RG10A(B2S)/BGEF
Rated Voltage	3.0V (Dry batteries R03/LR03×2)
Reaching Distance	8m
Environment Temperature Range	-5°C~60°C(23°F~140°F)

Buttons and Functions

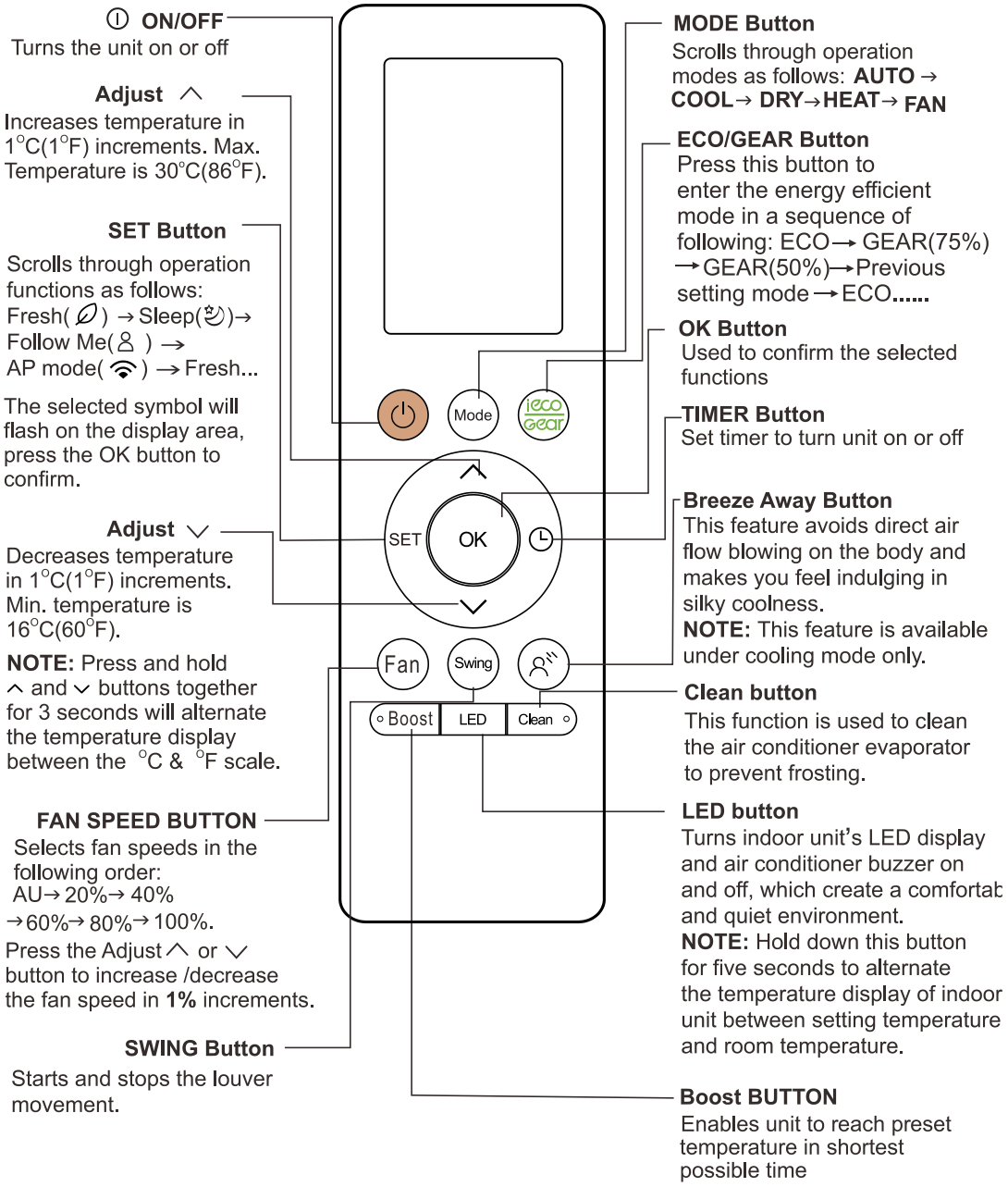

Remote LCD Screen Indicators

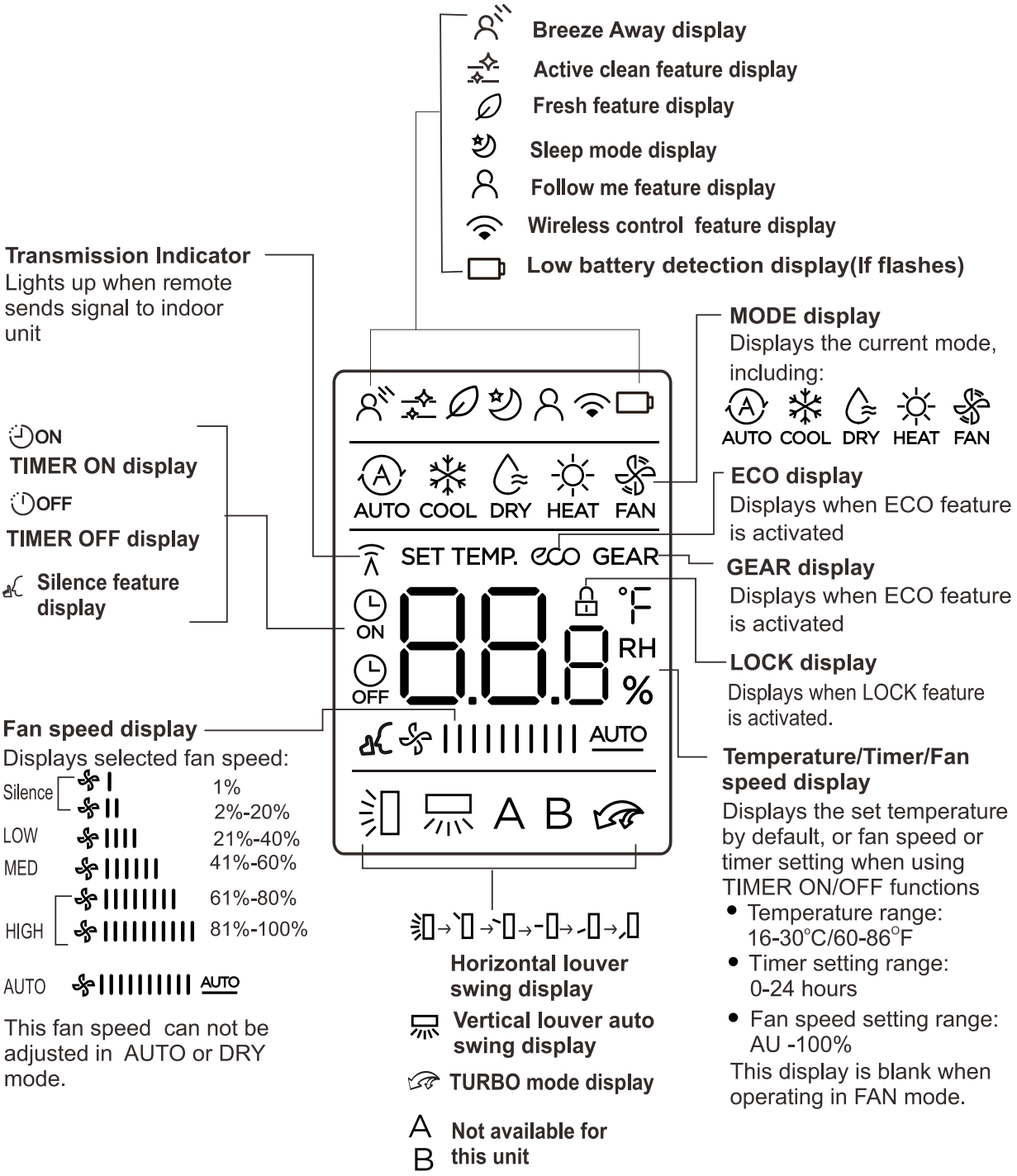

5.1.2 RG10B(B2)/BGEF (Standard for some units)

Remote Controller Specifications

Model	RG10B(B2)/BGEF
Rated Voltage	3.0V (Dry batteries R03/LR03×2)
Reaching Distance	8m
Environment Temperature Range	-5°C~60°C(23°F~140°F)

Buttons and Functions

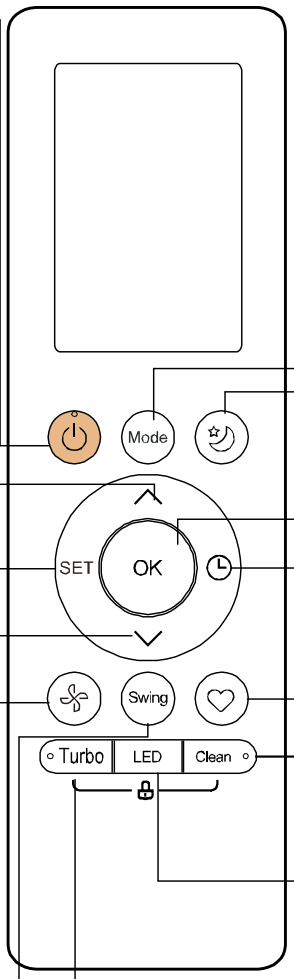

ON/OFF
Turns the unit on or off.

TEMP ∧
Increases temperate in 1°C (1°F) increments. Max. temperature is 30°C (86°F).
NOTE: Press together ∨& ∧ buttons at the same time for 3 seconds will alternate the temperature display between the °C & °F.

SET
Scrolls through operation functions as follows:
Fresh( ) → Follow Me( )
AP mode( ) → Fresh ....
The selected symbol will flash on the display area, press the OK button to confirm.

TEMP ∨
Decreases temperature in 1°C(1°F) increments. Min. temperature is 16°C(60°F).

FAN SPEED
Selects fan speeds in the following order:
AUTO → LOW→ MED→ HIGH
NOTE: Holding this button down for 2 seconds will activate Silence feature.

SWING
Starts and stops the horizontal louver movement. Hold down for 2 seconds to initiate vertical louver auto swing feature (some units).

MODE
Scrolls through operation modes as follows: **AUTO → COOL → DRY → HEAT → FAN**
NOTE: HEAT mode is not supported by the cooling only appliance.

SLEEP
Saves energy during sleeping hours.

OK
Used to confirm the selected functions

TIMER
Set timer to turn unit on or off.

SHORTCUT
Used to restore the current settings or resume previous settings.

CLEAN
Used to start/stop the Self Clean or Active Clean function.

LED
Turns indoor unit's LED display and air conditioner buzzer on ar off (modeldependent), which create a comfortable and quiet environment.

Turbo
Enables unit to reach preset temperature in shortest possible time

Remote LCD Screen Indicators

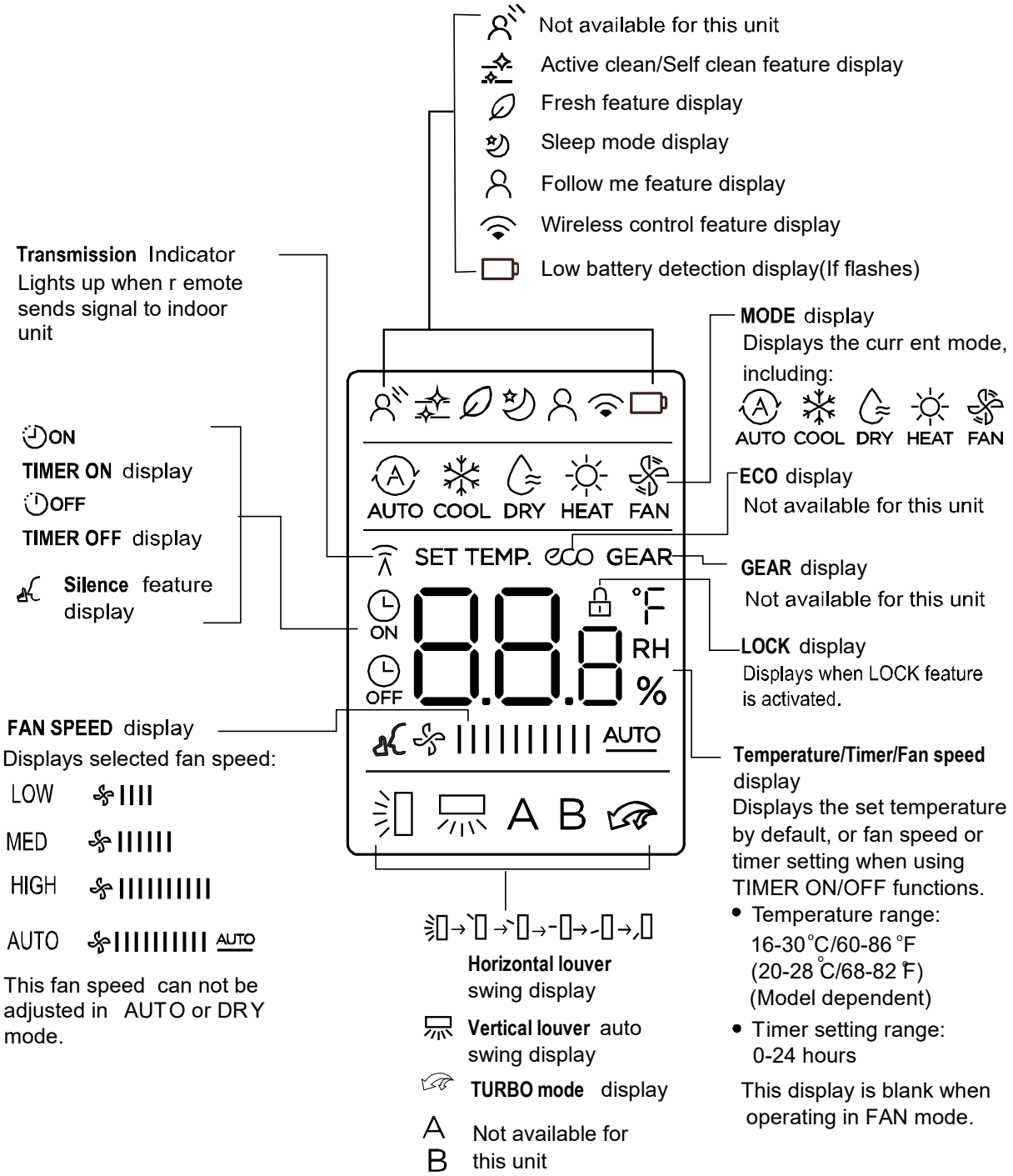

5.2 LCD Wired Remote Controller

5.2.1 LCD Wired Remote Controller KJR-12B/DP(T)

The KJR-12B/DP(T) wired remote controller is standard for Duct type and is optional for some types.

i) Buttons and Functions

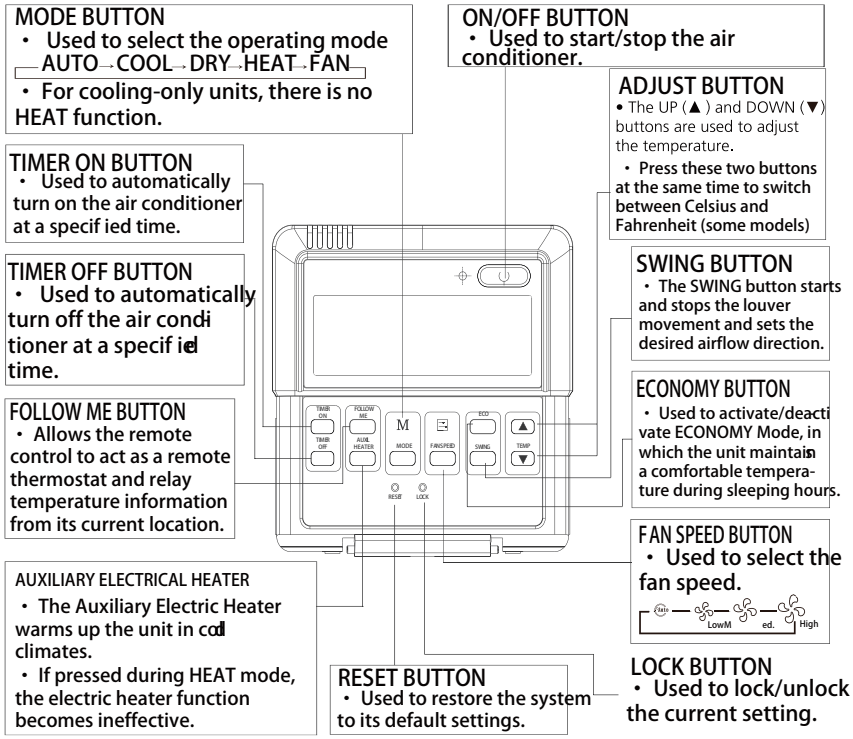

ii) LCD Screen

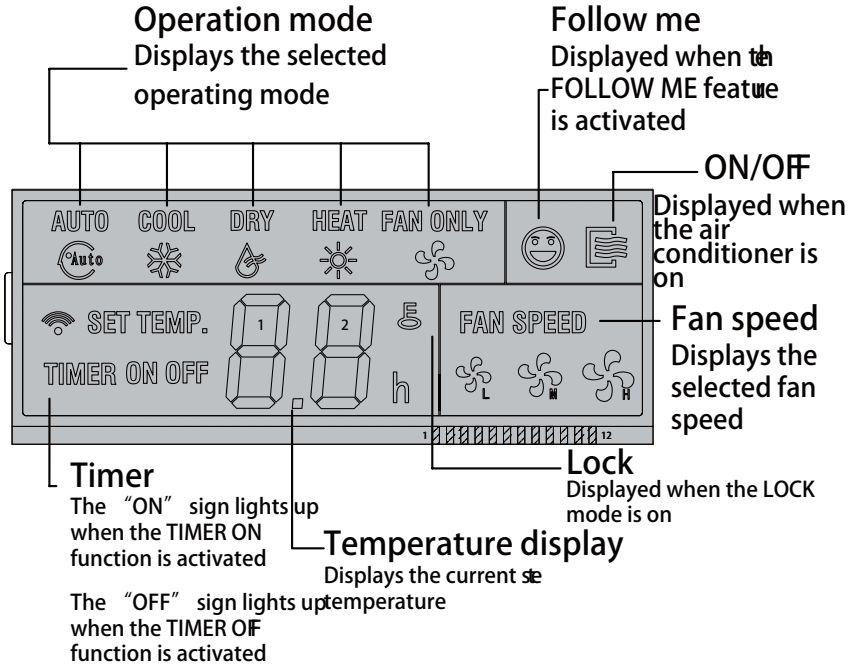

iii) Installation

- **Dimensions**

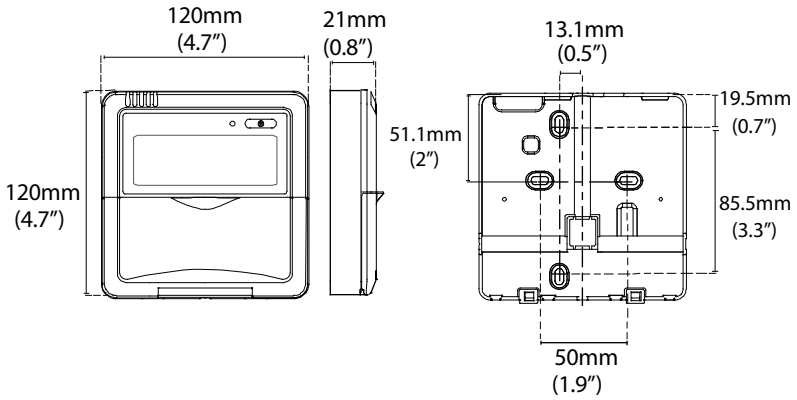

- **Wiring diagram**

  Refer to the following diagram to wire the wall-mounted remote control to the indoor unit.

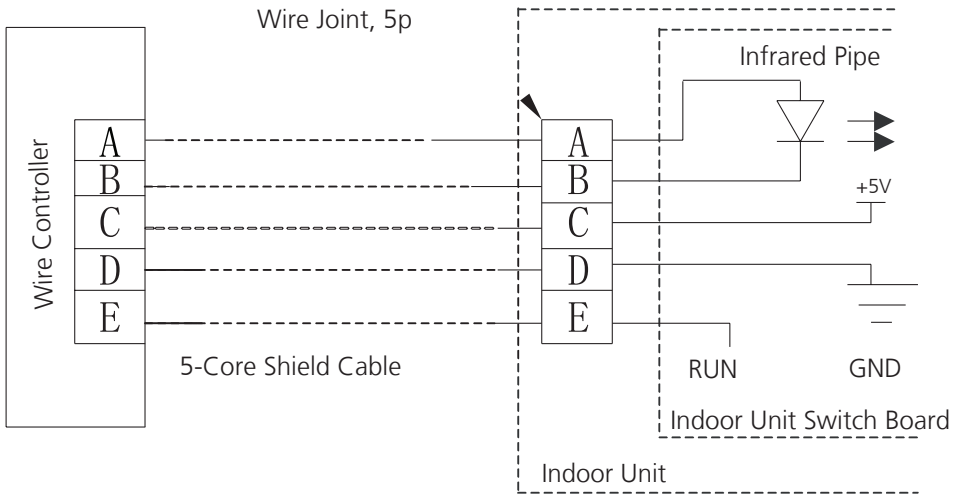

- **Installation Diagram**

Connect the wire from the display panel of the indoor unit to a connecting cable. Then connect the other side of the connecting cable to the remote control.

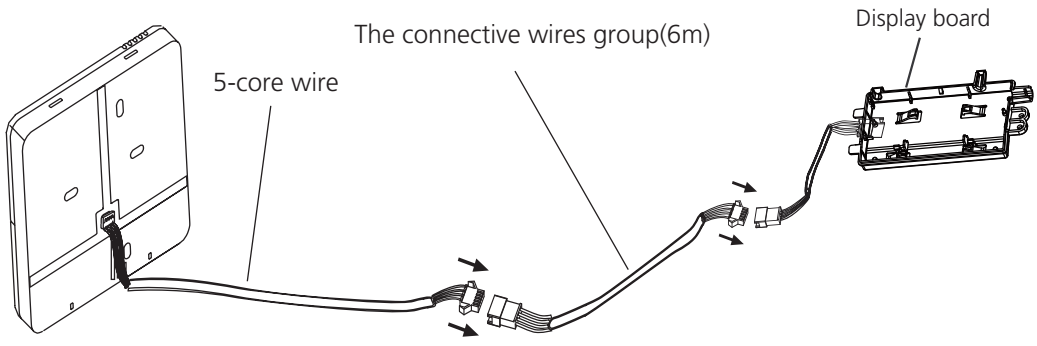

Note: Be sure to reserve a length of the connecting wire for periodic maintenance.

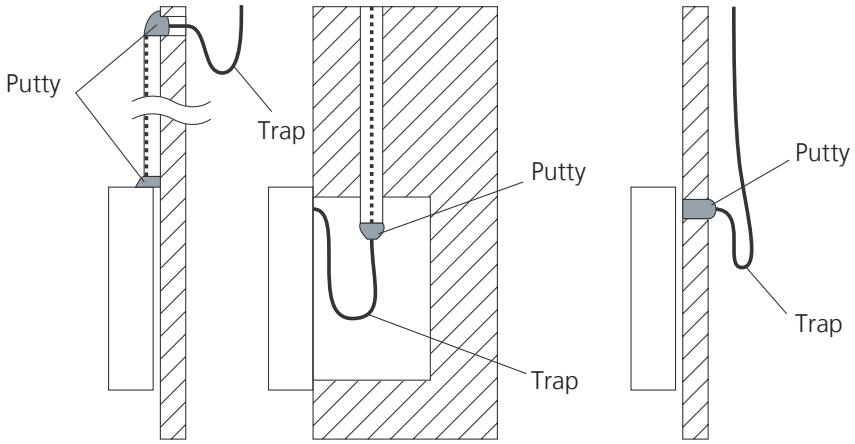

Note: DO NOT allow water to enter the remote control. Use the trap and putty to seal the wires.

- **For exposed mounting, cut holes on four of the sides according to the picture below.**

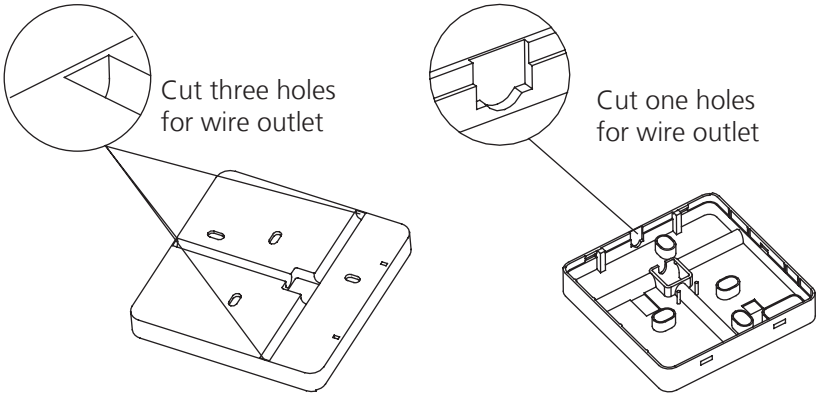

- **For shielded wiring, please refer to the picture below.**

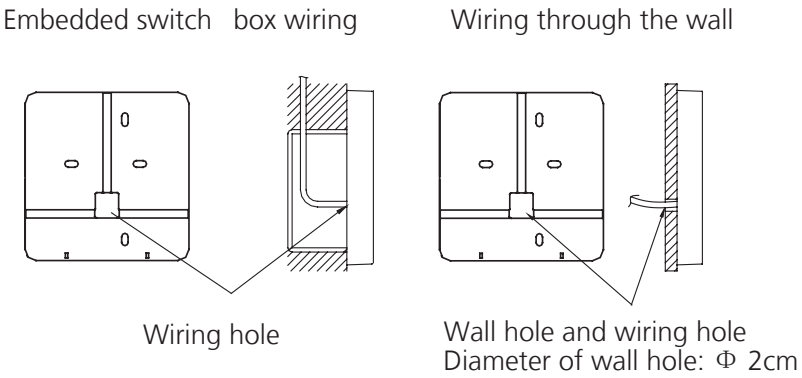

5.2.2 LCD Wired Remote Controller KJR-120C/TF-E(Optional)

The KJR-120C/TF-E wired remote controller is optional for some types.

i) Buttons and Functions

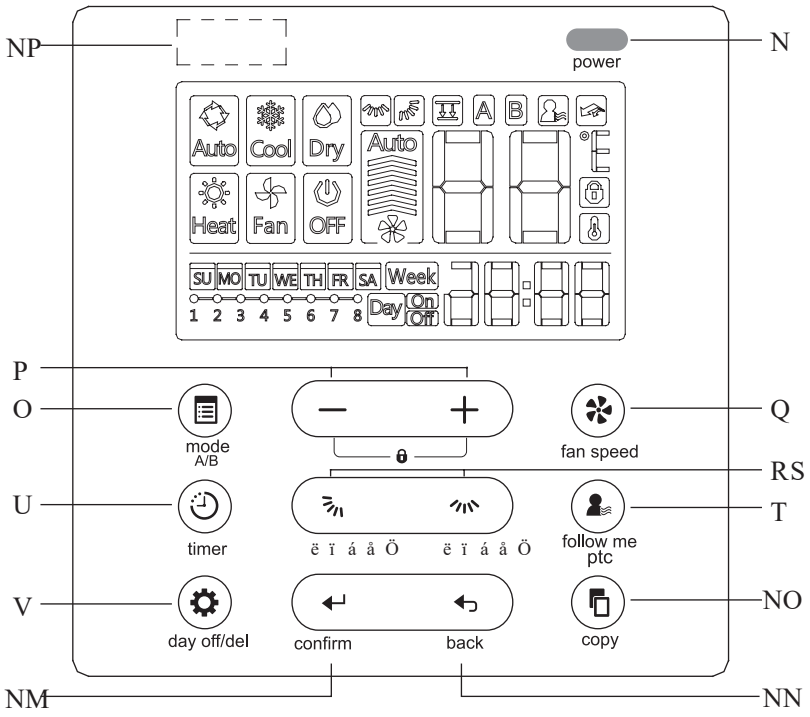

1. POWER button

Turn on of turn off the unit.

2. MODE(A/B) button

Used to select the operation mode: Auto / Cooling / Drying / Heating / Fan;

Hold to active the operation of auto-lifting panel when off

3. Adjust button

To set temperature, time and timer; set up or down the auto-lifting panel

4. FAN SPEED button

Used to select the fan speed.

5. Up-down airflow direction and swing Button

Press for adjusting the angel of louver, hold for vertical swing; individual louver control for cassette panel

6. Left-right airflow swing Button

Press for stop or start the horizontal swing

7. FOLLOW ME(PTC) button

Allows the remote control to act as a remote thermostat and send temperature information from its current location.

8. TIMER button

To set timer on and timer off time of one day

9. DELAY/DAY OFF button

To set 1 to 2 hours delay off for each day or a whole day off in a weekly timer schedule

10. CONFIRM button

To confirm an setting or call up the menu

11. BACK button

Back to previous operation or superior menu

12. COPY button

Copy timer setting of one day to another in weekly schedule setting

13 Infrared remote receiver (on some models)

ii) LCD Screen

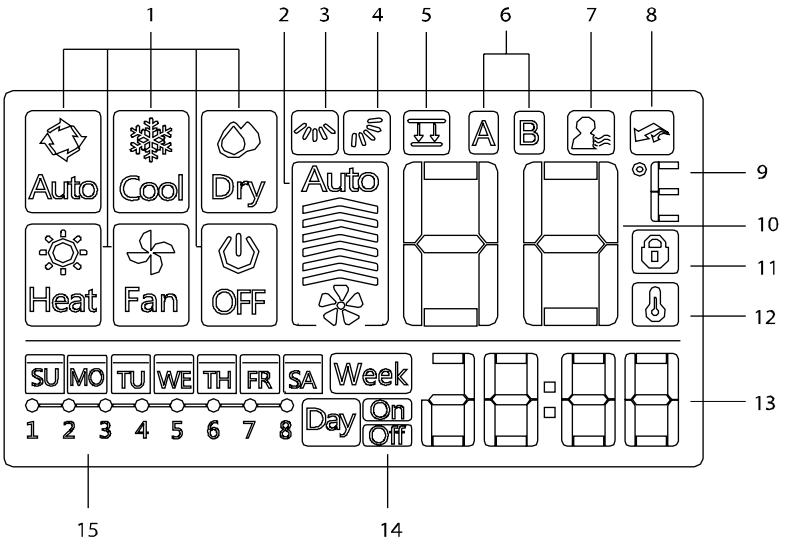

1 Operation mode indication

2 Fan speed indication

3 Left-right swing indication

4 Up-down swing indication

5 Faceplate function indication

6 Main unit and secondary unit indication

7 Follow me function indication

8 PTC function indication

9 C° / F° indication

10 Temperature display

11 Lock indication

12 Room temperature indication

13 Clock display

14 On/Off timer

15 Timer display

iii) Installation

- **Dimensions**

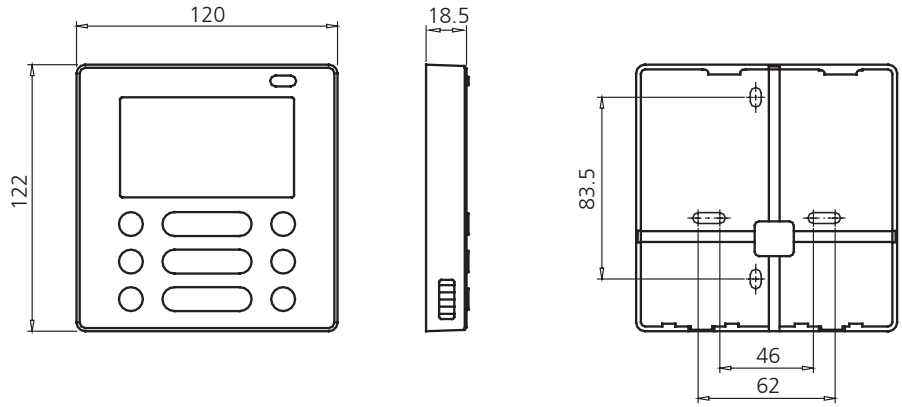

- **Wiring diagram**

Refer to the following diagram to wire the wall-mounted remote control to the indoor unit.

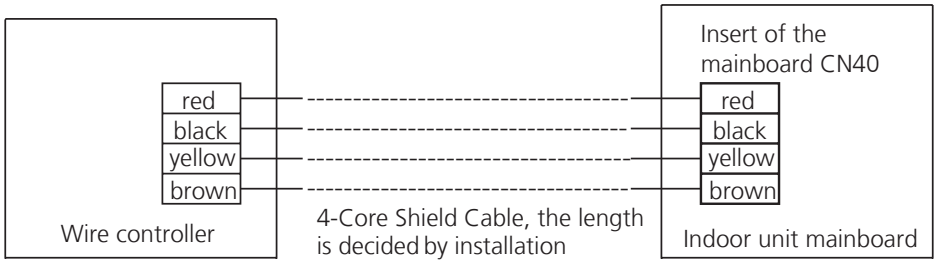

- **Installation Diagram**

Connect the female joint of wires group from the main board with the male joint of connective wires group. Then connect the other side of connective wires group with the male joint of wires group leads from wire controller.

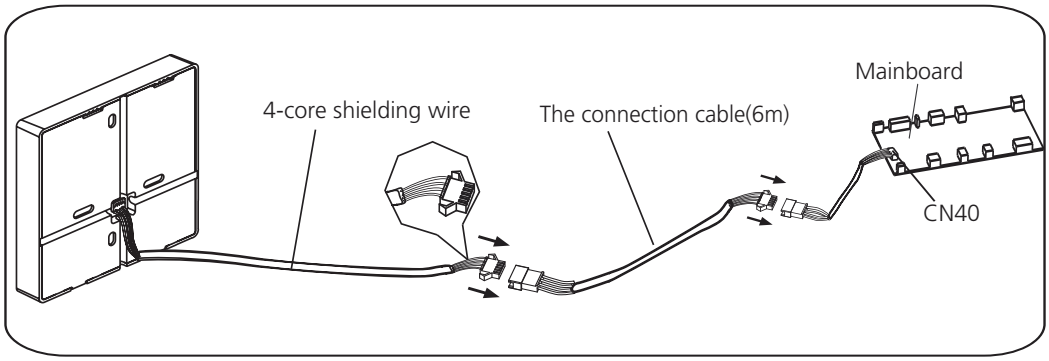

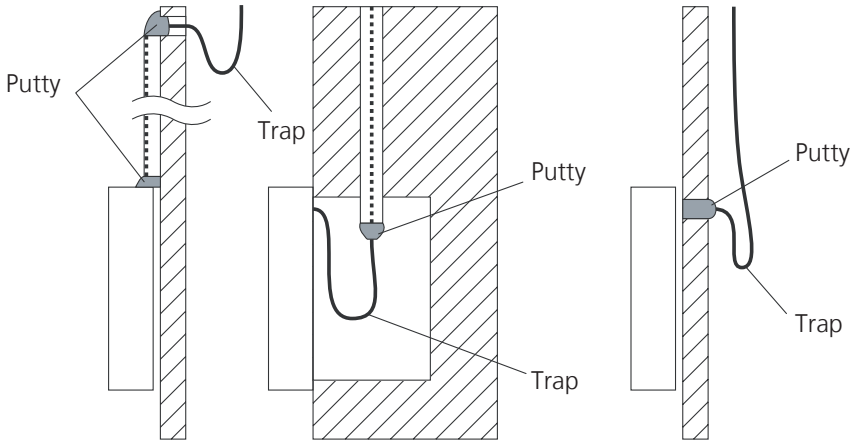

Note: DO NOT allow water to enter the remote control. Use the trap and putty to seal the wires.

- **For exposed mounting, four outletting positions. There are three need cutting.**

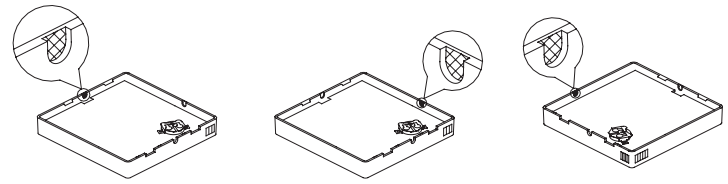

Cutting place of top side wire outlet

Cutting place of left side wire outlet

Cutting place of right side wire outlet

- **For shielded wiring, please refer to the picture below.**

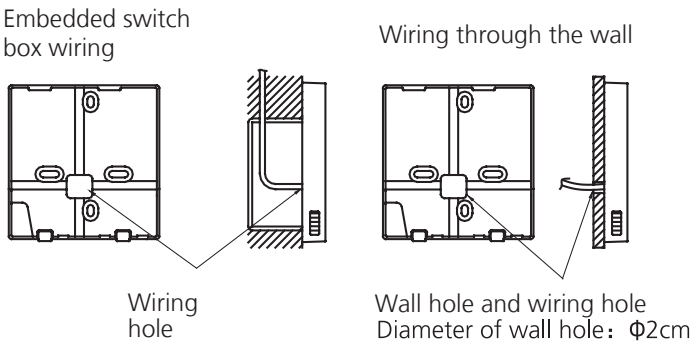

5.2.3 LCD Wired Remote Controller KJR-120G/TF-E(Optional)

The KJR-120G/TF-E wired remote controller is optional for some types.

i) Buttons and Functions

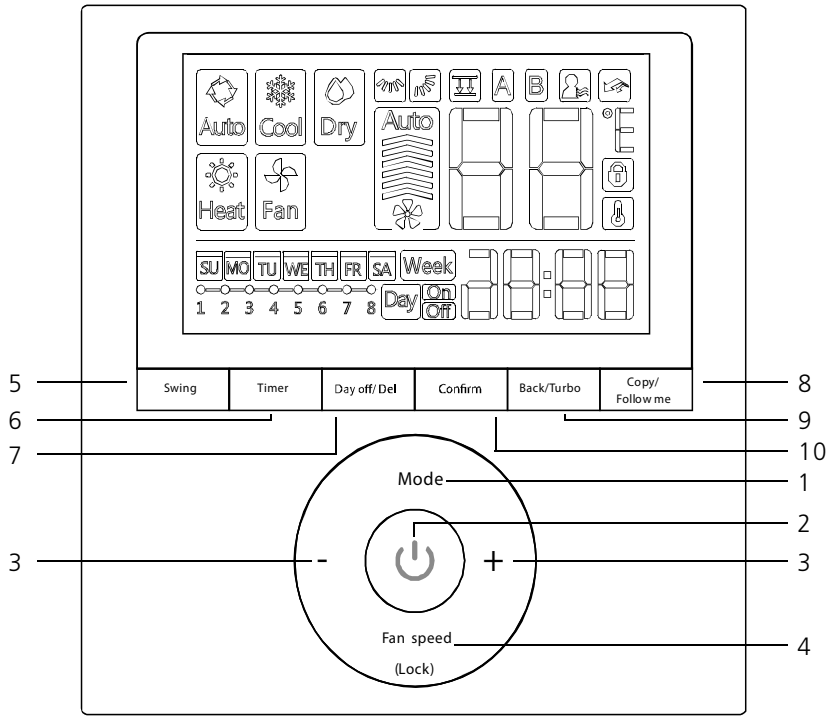

1 MODE button

Used to select the operation mode: Auto / Cooling / Drying / Heating / Fan;

Hold to active the operation of auto-lifting panel when off

2. POWER button

Turn on of turn off the unit.

3. Adjust button

To set temperature, time and timer; set up or down the auto-lifting panel

4. FAN SPEED button

Used to select the fan speed.

5. Swing Button

Press to active vertical swing, hold for horizontal swing

6. TIMER button

To set timer on and timer off time of one day

7. DELAY/DAY OFF button

To set 1 to 2 hours delay off for each day or a whole day off in a weekly timer schedule

8. COPY/FOLLOW ME button

To copy timer setting of one day to another in weekly schedule setting;

To active the follow me function while in normal operation.

9. BACK/TURBO button

Back to previous operation or superior menu

To active turbo mode while in normal operation

10. CONFIRM button

To confirm an setting or call up the superior menu

ii) LCD Screen

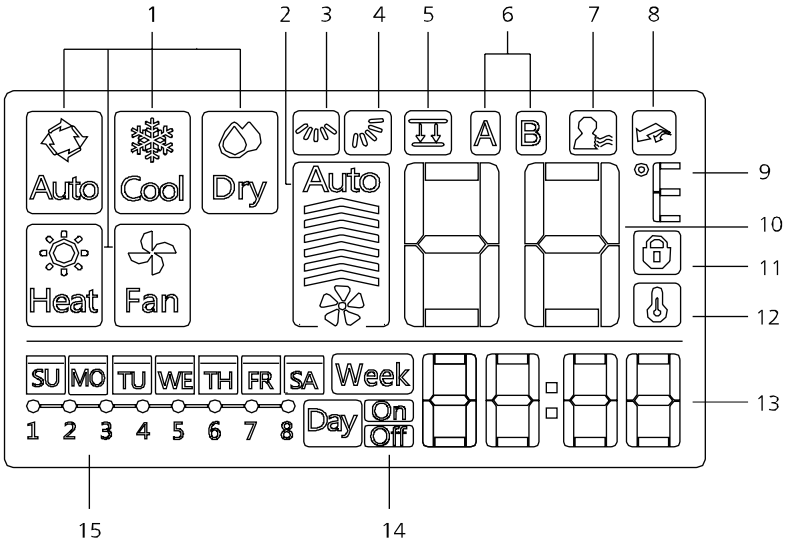

1 Operation mode indication

2 Fan speed indication

3 Left-right swing indication

4 Up-down swing indication

5 Faceplate function indication

6 Main unit and secondary unit indication

7 Follow me function indication

8 Turbo/PTC function indication

9 C° / F° indication

10 Temperature display

11 Lock indication

12 Room temperature indication

13 Clock display

14 On/Off timer

15 Timer display

iii) Installation

- **Dimensions**

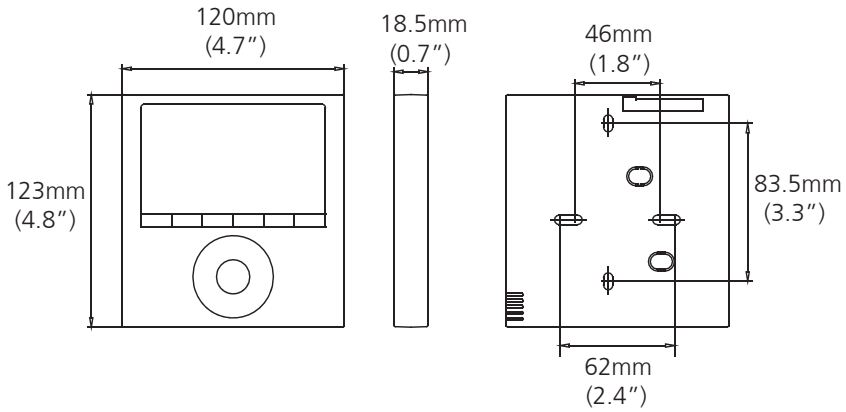

- **Wiring diagram**

1) Connection

For Cassette: The wired controller connects to main control board directly.

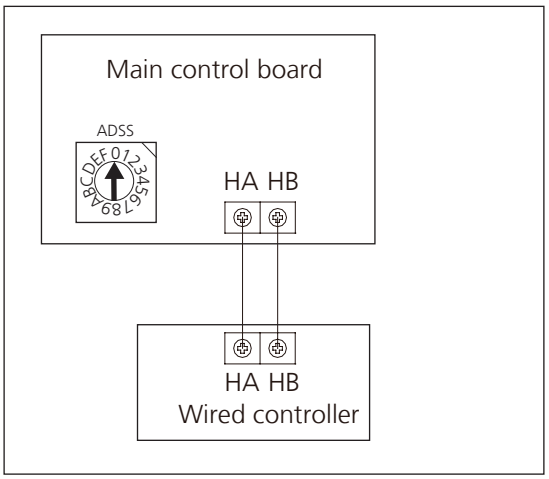

For Duct, Ceiling& floor: The wired controller connects to terminal board, terminal board connects to main control board.

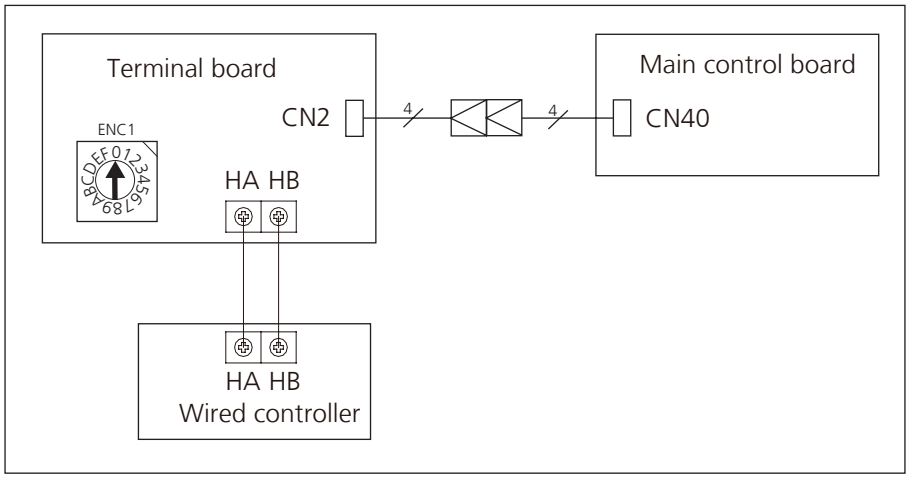

2) Address setting

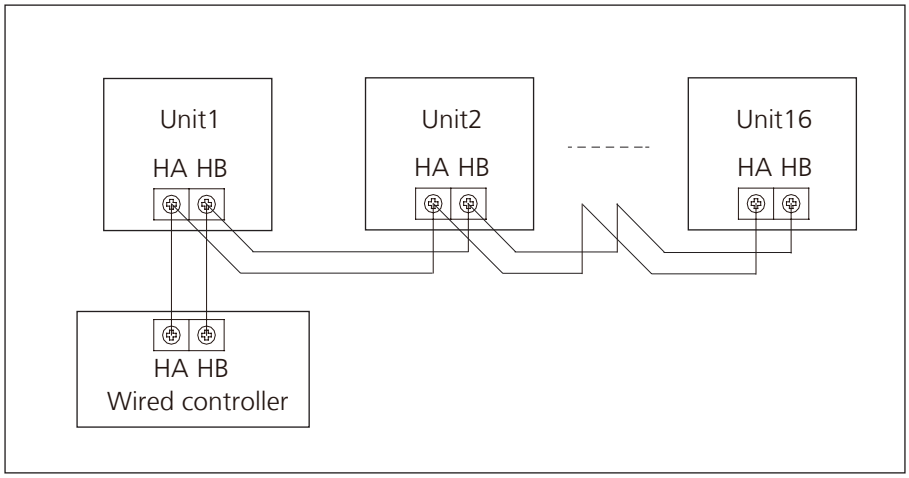

a. One non-polarity controller can control up to 16 indoor units.

b. When the non-polarity controller is connected to several units, every air-conditioner in network has only one network address to distinguish each other.

c. Address code of air-conditioner in LAN is set by code switch ENC1(Duct and Ceiling& Floor) or ADSS(Cassette) of the indoor unit, and the set range is 0-15.

d. Note: The indoor units are controlled at the same time, not independently. The purpose of setting network address is identify the unit when error occurs.

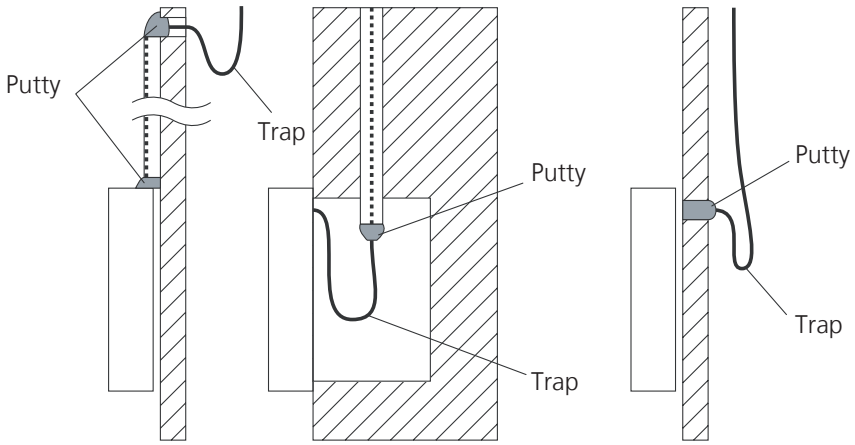

Note: DO NOT allow water to enter the remote control. Use the trap and putty to seal the wires.

- **For wiring the indoor unit, there are four methods:**
  - From the rear;
  - From the bottom;
  - From the top;
  - From the top center.

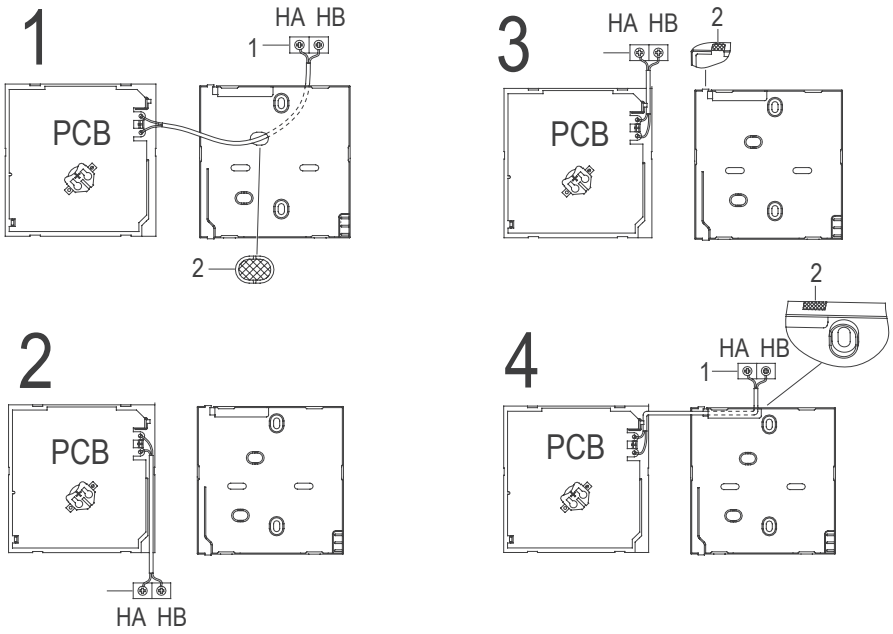

- 1: Indoor Unit.
- 2: Notch the part for the wiring to pass through with a nipper tool.
- Connect the terminals on the remote controller (HA ,HB), and the terminals of the indoor unit. (HA ,HB). (HA and HB do not have polarity.)

5.2.4 LCD Wired Remote Controller KJR-120X/TFBG-E(Optional)

The KJR-120X/TFBG-E wired remote controller is optional for some types.

i) Buttons and Functions

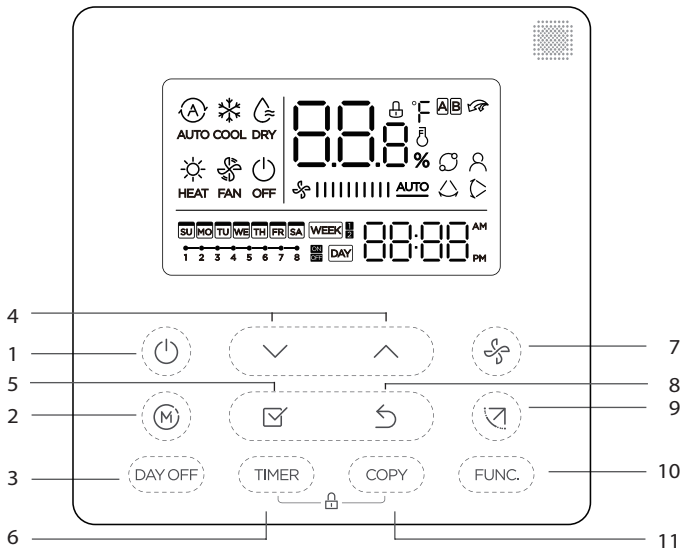

1. POWER button

Turn on of turn off the unit.

2 MODE button

Used to select the operation mode: Auto / Cooling / Drying / Heating / Fan;

3. DAY OFF/DEL button

To set 1 to 2 hours delay off for each day or a whole day off in a weekly timer schedule.

4. Adjust button

To set temperature, time and timer

5. CONFIRM button

To confirm an setting or call up the superior menu

6. TIMER button

To set timer on and timer off time of one day 7. FAN SPEED button

Used to select the fan speed.

8. BACK button

Back to previous operation or superior menu

9. Swing Button

Press to active vertical swing, hold for horizontal swing

10. FUNC. button

Press the FUNC. button to set the turbo or rotating or Ifeel function.

11. COPY button

To copy timer setting of one day to another in weekly schedule setting.

ii) LCD Screen

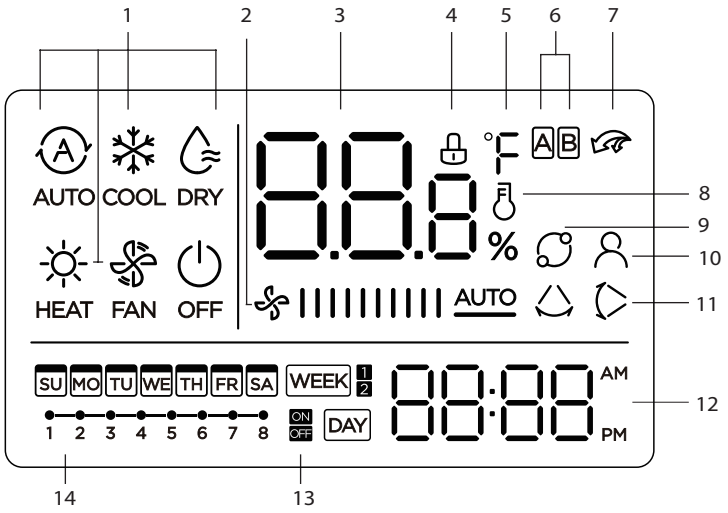

1 Operation mode indication
2 Fan speed indication
3 Temperature display
4 Lock indication
5 °C / °F indication
6 Main unit and secondary unit indication
7 Turbo function indication
8 Room temperature indication
9 Rotating indication
10 Follow Me function indication
11 Left-right swing indication (some models)
12 Clock display
13 On/Of timer
14 Timer display

iii) Installation

- **Dimensions**

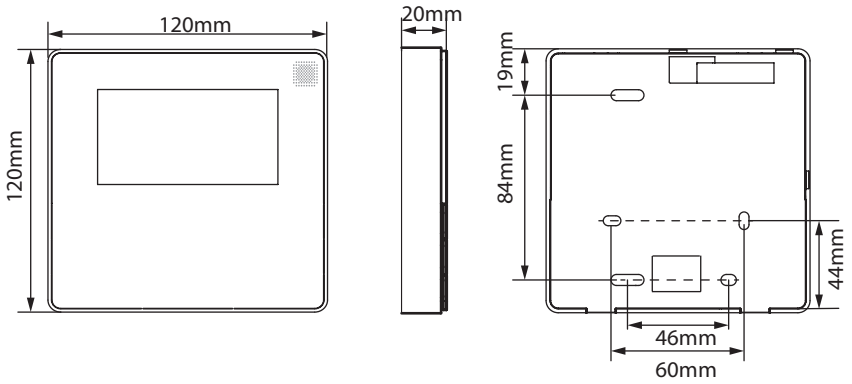

3) Connection

- **Wire with the indoor unit:**

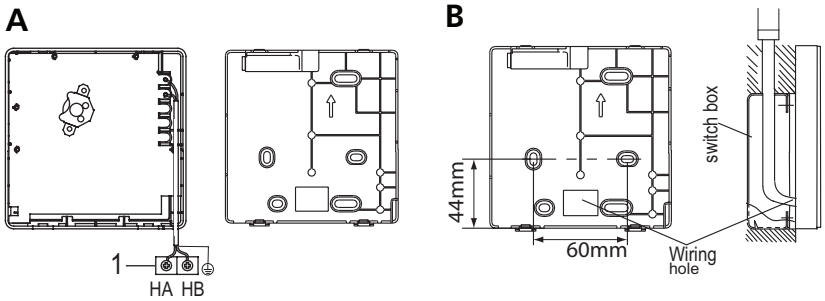

- 1: Indoor Unit.
- 2: Notch the part for the wiring to pass through with a nipper tool.
- Connect the terminals on the remote controller (HA ,HB), and the terminals of the indoor unit. (HA ,HB). (HA and HB do not have polarity.)

For some models: The wired controller connects to main control board directly.

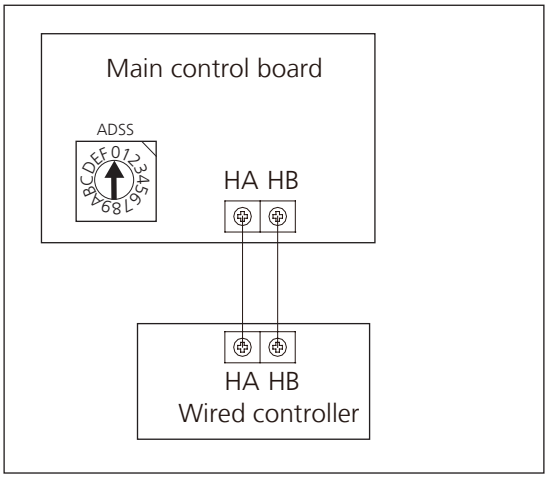

For some models: The wired controller connects to terminal board, terminal board connects to main control board.

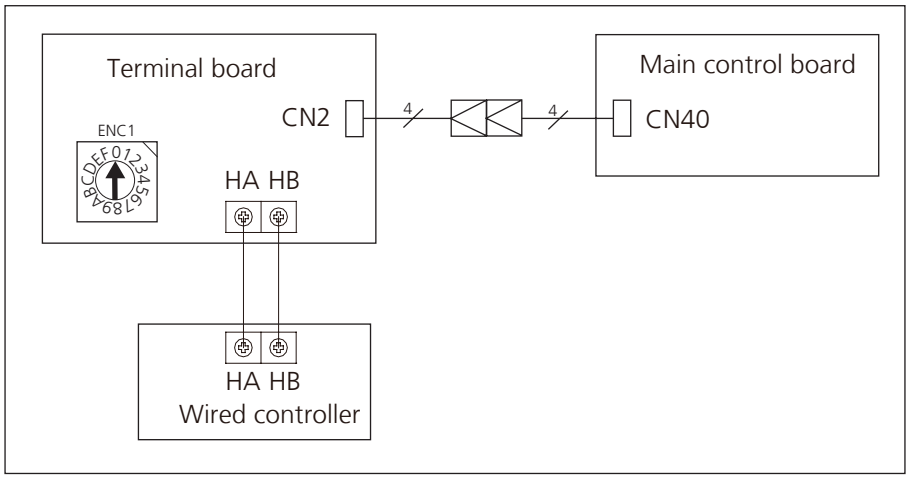

4) Address setting

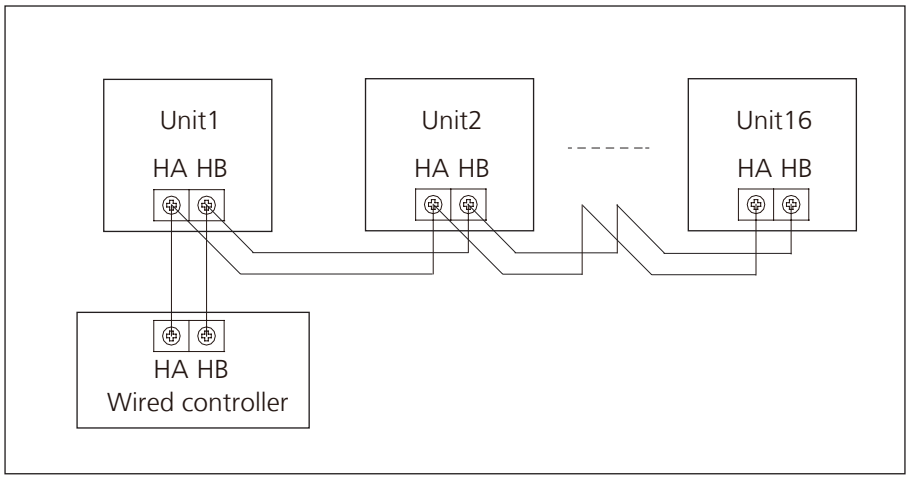

a. One non-polarity controller can control up to 16 indoor units.

b. When the non-polarity controller is connected to several units, every air-conditioner in network has only one network address to distinguish each other.

c. Address code of air-conditioner in LAN is set by code switch ENC1(Duct and Ceiling& Floor) or ADSS(Cassette) of the indoor unit, and the set range is 0-15.

d. Note: The indoor units are controlled at the same time, not independently. The purpose of setting network address is identify the unit when error occurs.

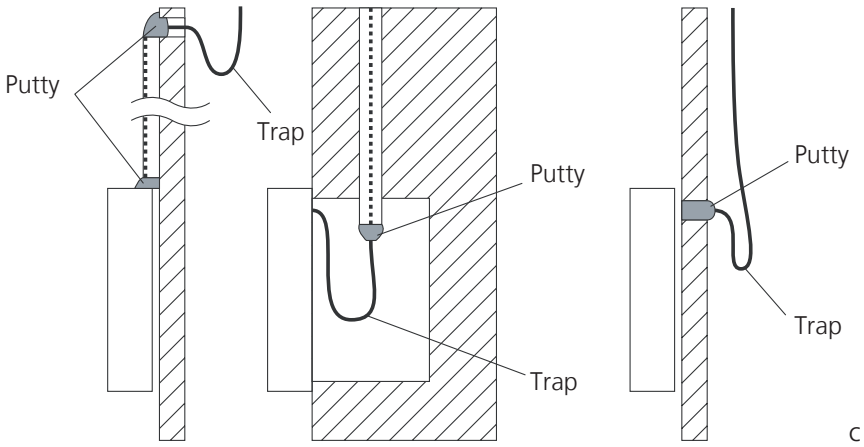

Note: DO NOT allow water to enter the remote control. Use the trap and putty to seal the wires.

5.3 Centralized Controller

1) Connection

For Light commercial air conditioner with XYE port, it can be directly connected to Centralized Controller (CCM03, CCM09).

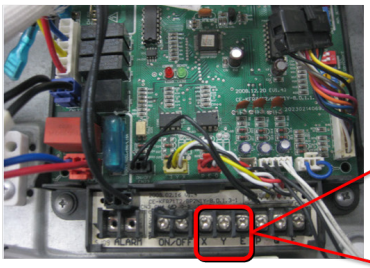

Indoor unit

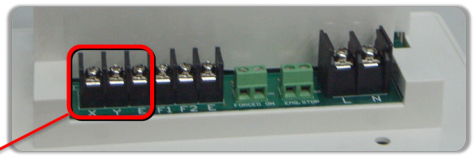

CCM03



CCM09

2) Address setting

When setting the address, please make sure the unit is powered off. The address can be set from 0 to 63 by the switch. Turn on the unit, then the address will be effective.

SWITCH	FOR CCM UNIT ADDRESS	
S2 + S1	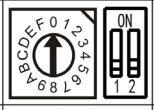	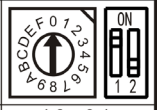
ADDRESS	0~15	16~31
Factory Setting	✓	
S2 + S1	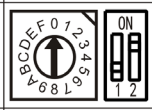	
ADDRESS	32~47	48~63
Factory Setting		

Note: For light commercial aire conditioner with XYE port, it can be also connected to BMS (Building Management System).

If there is any CAC (central air conditioner) connecting with the central controller at the same time, please set the address from largest (63,62,61…), since the CAC units could obtain address automatically from the smallest (00,01,02…)

5.4 Using the wire controller to set external static pressure

- You can use the unit's automatic airflow adjustment function to set external static pressure.
- Automatic airflow adjustment is the volume of blow-off air that has been automatically adjusted to the quantity rated.

1. Make sure the test run is done with a dry coil. If the coil is not dry, run the unit for 2 hours in FAN ONLY mode to dry the coil.

2. Check that both power supply wiring and duct installation have been completed. Check that any closing dampers are open. Check that the air filter is properly attached to the air suction side passage of the unit.

3. If there is more than one air inlet and outlet, adjust the dampers so that the airflow rate of each air inlet and outlet conforms with the designed airflow rate. Make sure the unit is in FAN ONLY mode. Press and set the airflow adjustment button on the remote control to change the airflow rate from H or L.

4. Set the parameters for automatic airflow adjustment. When the air conditioning unit is off, perform the following steps:

- When the unit is turned off, hold the MODE button and

FAN button down together for three seconds. ("AF" indicator flashes for 3 times.)

- Press " △ " or " ▽ " to select the AF.

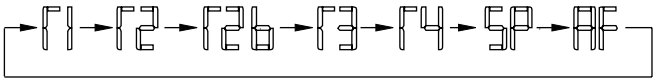

- Press "MODE". The air conditioning unit will then start the fan for airflow automatic adjustment.

After 3 to 6 minutes, the air conditioning unit stops operating once automatic airflow adjustment has finished.

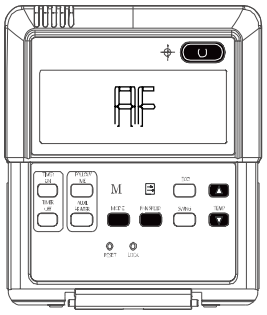

Caution: DO NOT adjust the dampers when automatic airflow adjustment is active.

Caution:

• If there is no change after airflow adjustment in the ventilation paths, be sure to reset automatic airflow adjustment.

• If there is no change to ventilation paths after airflow adjustment,contact your dealer, especially if this occurs after testing the outdoor unit or if the unit has been moved to a different location.

• Do not use automatic airflow adjustment with remote control,if you are using booster fans, outdoor air processing unit, or a HRV via duct.

• If the ventilation paths have been changed, reset airflow automatic adjustment as described from step 3 onwards.

5.5 Using the wire controller to set airflow rate

When the air conditioning unit is off, perform the following steps:

1. Press"MODE" and "FAN" for three seconds.

2. Press " △ " or " ▽ " to select the SP.

3. Press "MODE" to set the airflow rate in the range of 0~4.

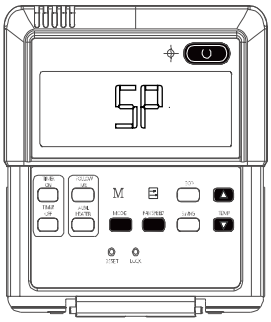

"0": No airflow change

"1"~"4":Airflow increase progressively

4. Press "ON/OFF" to finish the airflow setting.

Troubleshooting

Contents

1. Safety Caution 3

2. General Troubleshooting 4

3. Information Inquiry 6

4. Outdoor Unit Point Check Function 13

5. Error Diagnosis and Troubleshooting Without Error Code.....15

5.1 Remote maintenance.....15

5.2 Field maintenance 16

6. Quick Maintenance by Error Code.....21

7. Troubleshooting by Error Code.....22

7.1 EH 00/EH 0A / EC 51 (EEPROM parameter error Diagnosis and Solution).....22

7.2 EL 01 (Indoor and outdoor unit communication error Diagnosis and Solution)23

7.3 EH 03 / EC 07 (Fan speed is operating outside of the normal range)/EC 71(Over Current Failure of Outdoor DC Fan Motor) Diagnosis and Solution.....25

7.4 EH 60/EH 61/EC 53/EC 52/EC 54/EC 56/EC 50 (Open circuit or short circuit of temperature sensor diagnosis and solution) 29

7.5 EL 0C (Refrigerant Leakage Detection Diagnosis and Solution).....30

7.6 EH 0E (Water-Level Alarm Malfunction Diagnosis and Solution).....31

7.7 PC 00 (IPM Malfunction or IGBT Over-strong Current Protection Diagnosis and Solution).....32

7.8 PC 01 (Over Voltage or Too Low Voltage Protection)/PC 10(Outdoor unit low AC voltage protection)/PC 11(Outdoor unit main control board DC bus high voltage protection)/PC 12(Outdoor unit main control board DC bus high voltage protection /341 MCE error) Diagnosis and Solution.....33

Troubleshooting

Contents

7.9 PC 04 (Inverter Compressor Drive Error Diagnosis and Solution).....34

7.10 PC 03/PC 31 (Low Pressure Protection Diagnosis and Solution) 35

7.11 PC 02 (Top temperature protection of compressor or High temperature protection of IPM module Diagnosis and Solution).....36

7.12 EC 0d (Outdoor unit malfunction Diagnosis and Solution).....37

7.13 PC 40(Communication error between outdoor main PCB and IPM board diagnosis and solution).....38

7.14 PC 08(Current overload protection)/PC 44(Outdoor unit zero speed protection)/ PC 46(Compressor speed has been out of control)/PC 49(Compressor overcurrent failure) diagnosis and solution 39

7.15 PC 0F(PFC module protection diagnosis and solution) 41

7.16 EC 72 (Lack phase failure of outdoor DC fan motor diagnosis and solution).42

7.17 PC 43 (Outdoor compressor lack phase protection diagnosis and solution)...43

7.18 PC 45 (Outdoor unit IR chip drive failure diagnosis and solution).....44

7.19 PC 0L (Low ambient temperature protection).....44

7.20 EH 0b (Communication error between indoor two chips Diagnosis and Solution) 44

7.21 PC 30 (High pressure protection diagnosis and solution) 45

7.22 PC 0A (High temperature protection of condenser diagnosis and solution)...47

7.23 PC 06 (Discharge temperature protection of compressor diagnosis and solution) 48

8. Check Procedures.....49

1. Safety Caution

WARNING

Be sure to turn off all power supplies or disconnect all wires to avoid electric shock.
While checking indoor/outdoor PCB, please equip oneself with antistatic gloves or wrist strap to avoid damage to the board.

WARNING

Electricity remains in capacitors even when the power supply is off.
Ensure the capacitors are fully discharged before troubleshooting.

Test the voltage between P and N on back of the main PCB with multimeter. If the voltage is lower than 36V, the capacitors are fully discharged.

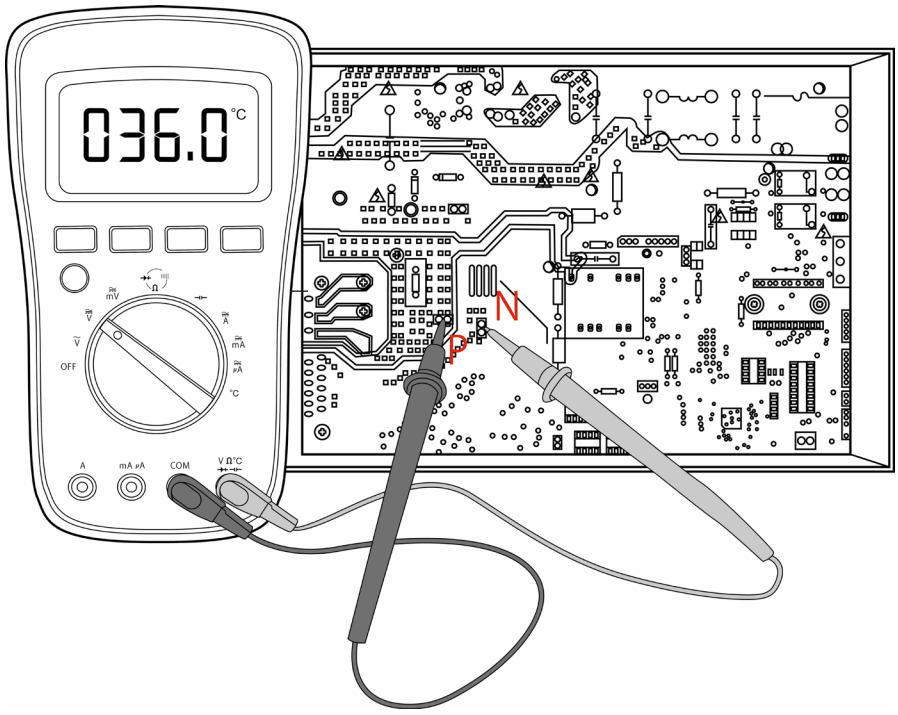

Note: This picture is for reference only. Actual appearance may vary.

2. General Troubleshooting

2.1 Error Display (Indoor Unit)

When the indoor unit encounters a recognized error, the operation lamp will flash in a corresponding series, the timer lamp may turn on or begin flashing, and an error code will be displayed. These error codes are described in the following table:

Operation Lamp	Timer Lamp	Display	Error Information	Solution
1 time	OFF	EH00/ EH0R	Indoor unit EEPROM parameter error	TS22
2 times	OFF	EL01	Indoor / outdoor unit communication error	TS23
4 times	OFF	EH03	The indoor fan speed is operating outside of the normal range(for some models)	TS25
6 times	OFF	EH60	Indoor room temperature sensor T1 is in open circuit or has short circuited	TS29
6 times	OFF	EH61	Evaporator coil temperature sensor T2 is in open circuit or has short circuited	TS29
8 times	OFF	EL0C	Refrigerant Leakage Detection(for some models)	TS29
9 times	OFF	EH0b	Communication error between indoor two chips	TS44
13 times	OFF	EH0E	Water-level alarm malfunction	TS31
5 times	OFF	EC53	Outdoor room temperature sensor T4 is in open circuit or has short circuited	TS29
5 times	OFF	EC52	Condenser coil temperature sensor T3 is in open circuit or has short circuited	TS29
5 times	OFF	EC54	Compressor discharge temperature sensor TP is in open circuit or has short circuited	TS29
5 times	OFF	EC56	Evaporator coil outlet temperature sensor T2B is in open circuit or has short circuited(for free-match indoor units)	TS29
5 times	ON	EC51	Outdoor unit EEPROM parameter error	TS22
12 times	OFF	EC07	The outdoor fan speed is operating outside of the normal range(for some models)	TS25
7 times	FLASH	PC00	IPM malfunction or IGBT over-strong current protection	TS32
2 times	FLASH	PC01	Over voltage or over low voltage protection	TS33
3 times	FLASH	PC02	Top temperature protection of compressor or High temperature protection of IPM module	TS36
5 times	FLASH	PC04	Inverter compressor drive error	TS34
7 times	FLASH	PC03	High pressure protection or low pressure protection (for some models)	TS45/ TS35
14 times	OFF	EC0d	Outdoor unit malfunction	TS37
1 time	ON	--	Indoor units mode conflict(match with multi outdoor unit) (for some models)	--

For other errors:

The display board may show a garbled code or a code undefined by the service manual. Ensure that this code is not a

temperature reading.

Troubleshooting:

Test the unit using the remote control. If the unit does not respond to the remote, the indoor PCB requires replacement. If the unit responds, the display board requires replacement.

LED flash frequency:

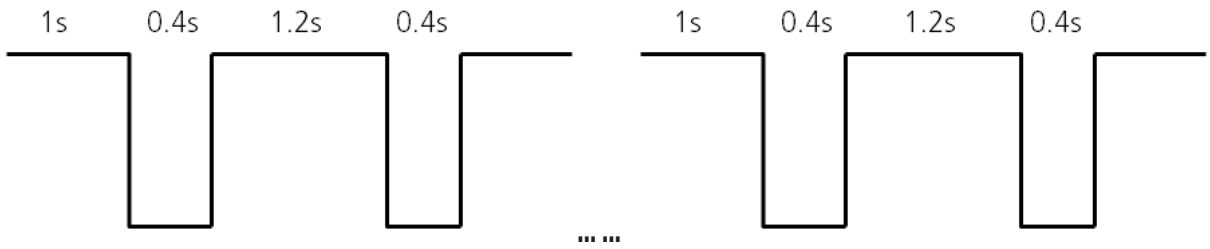

2.2 Error Display (For Some Outdoor Units)

Display	Malfunction or Protection	Solution
EC51	Outdoor EEPROM malfunction	TS22
EL01	Indoor / outdoor units communication error	TS23
PC40	Communication malfunction between IPM board and outdoor main board	TS38
PC08	Outdoor overcurrent protection	TS39
PC10	Outdoor unit low AC voltage protection	TS33
PC11	Outdoor unit main control board DC bus high voltage protection	TS33
PC12	Outdoor unit main control board DC bus high voltage protection /341 MCE error	TS33
PC00	IPM module protection	TS32
PC0F	PFC module protection	TS41
EC71	Over current failure of outdoor DC fan motor	TS25
EC72	Lack phase failure of outdoor DC fan motor	TS42
EC07	Outdoor fan speed has been out of control	TS25
PC43	Outdoor compressor lack phase protection	TS43
PC44	Outdoor unit zero speed protection	TS39
PC45	Outdoor unit IR chip drive failure	TS44
PC46	Compressor speed has been out of control	TS39
PC49	Compressor overcurrent failure	TS39
PC30	High pressure protection	TS45
PC31	Low pressure protection	TS35
PC0R	High temperature protection of condenser	TS47
PC06	Temperature protection of compressor discharge	TS48
PC02	Top temperature protection of compressor	TS36
EC52	Condenser coil temperature sensor T3 is in open circuit or has short circuited	TS29
EC53	Outdoor room temperature sensor T4 is in open circuit or has short circuited	TS29
EC54	Compressor discharge temperature sensor TP is in open circuit or has short circuited	TS29
EC50	Open or short circuit of outdoor unit temperature sensor(T3,T4.TP)	TS29
PC0L	Low ambient temperature protection	TS44

3. Information Inquiry

Duct type &Floor ceiling Type:

- To enter information inquiry status, complete the following procedure within ten seconds:
  - Press LED(or DO NOT DISTURB) 3 times.
  - Press SWING(or AIR DIRECTION) 3 times.
- Finish 1 and 2 within 10 seconds, you will hear beeps for two seconds, which means the unit goes into parameter checking mode.
- Use the LED(or DO NOT DISTURB) and SWING(or AIR DIRECTION) buttons to cycle through information displayed.
- Pressing LED(or DO NOT DISTURB) will display the next code in the sequence. Pressing SWING(or AIR DIRECTION) will show the previous.
- The following table shows information codes. The screen will display this code for two seconds, then the information for 25 seconds.

Displayed code	Explanation	Displayed value	Meaning	Additional Notes
T1	Room temperature	-1F,-1E,-1d,-1c,-1b,-1A -19—99 A0,A1,…A9 b0,b1,…b9 c0,c1,…c9 d0,d1,…d9 E0,E1,…E9 F0,F1,…F9	-25,-24,-23,-22,-21,-20 -19—99 100,101,…109 110,111,…119 120,121,…129 130,131,…139 140,141,…149 150,151,…159	1. All displayed temperatures use actual values. 2. All temperatures are displayed in °C regardless of remote used. 3. T1, T2, T3, T4, and T2B display ranges from -25 to 70 °C. TP display ranges from -20 to 130 °C. 4. The frequency display ranges from 0 to 159HZ. 5. If the actual values exceed or fall short of the defined range, the values closest to the maximum and minimum values will be displayed.
T2	Indoor coil temperature			
T3	Outdoor coil temperature			
T4	Ambient temperature			
TB	Outlet temperature of indoor coil			
TP	Discharge temperature			
TH	Suction temperature			
FT	Targeted frequency			
FR	Actual frequency			
IF	Indoor fan speed	0 1,2,3,4	OFF Low speed, Medium speed, High speed, Turbo.	N/A Used for some large capacity motors.
OF	Outdoor fan speed	14-FF	Actual fan speed is equal to the display value converted to decimal value and multiplied by 10. This is measured in RPM.	Used for some small capacity motors. The display value is 14-FF (hexadecimal). The corresponding fan speed ranges from 200 to 2550RPM.
LR	EXV opening angle	0-FF	Actual EXV opening value is equal to the display value converted to decimal value and then multiplied by 2.	-
CT	Compressor continuous running time	0-FF	0-255 minutes	If the actual value exceeds or falls short of the defined range, the value closest to the maximum and minimum will be displayed.
ST	Causes of compressor stop	0-99	For a detailed explanation, contact technical support.	-

Displayed code	Explanation	Displayed value	Meaning	Additional Notes
A0				
A1				
b0				
b1				
b2				
b3				
b4				
b5		0-FF		
b6	Reserved	0-63	-	-
dL		0-FF		
Rc				
Uo				
Td				
nA				
CF				
PA				
Po				

Console Type& Compact Cassette Type:

- To enter information inquiry status, complete the following procedure within ten seconds:
  - Press LED(or DO NOT DISTURB) 3 times.
  - Press SWING(or AIR DIRECTION) 3 times.
- Finish 1 and 2 within 10 seconds, you will hear beeps for two seconds, which means the unit goes into parameter checking mode.
- Use the LED(or DO NOT DISTURB) and SWING(or AIR DIRECTION) buttons to cycle through information displayed.
- Pressing LED(or DO NOT DISTURB) will display the next code in the sequence. Pressing SWING(or AIR DIRECTION) will show the previous.
- The following table shows information codes. The screen will display this code for two seconds, then the information for 25 seconds.

Displayed code	Explanation	Additional Notes
Error code	Error code	Refer to next list of error code
T1	Room temperature	T1 temperature
T2	Indoor coil temperature	T2 temperature
T3	Outdoor coil temperature	T3 temperature
T4	Ambient temperature	T4 temperature
TP	Discharge temperature	TP temperature
FT	Targeted frequency	Targeted Frequency
Fr	Actual frequency	Actual Frequency
dL	Compressor current	N/A
Uo	Outdoor AC voltage	N/A
Sn	Indoor capacity test	N/A
od	Running mode	
Pr	Outdoor fan speed	Outdoor fan speed=value*8
Lr	EXV opening angle	EXV opening angle-value*8
ir	Indoor fan speed	Indoor fan speed=value*8
HU	Indoor humidity	N/A
TT	Adjusted setting temperature	N/A
DT	Reserve	N/A
iF	Reserve	N/A
nR	Reserve	N/A
oT	GA algorithm frequency	N/A

Super-slim Four-way Cassette Type:

- To enter engineer mode, in power-on or standby mode, and in non-locked state, press the key combination "ON/OFF + Air Speed" for 7s:
- After entering the engineer mode, the remote control will display icons of "Auto, Cool, Dry, Heat", and the Battery icon; at the same time, it will also display the numeric code of the current engineer mode (for the initial engineer mode, the numeric code displayed is 0), and all other icons are inactive.
- In engineer mode, the value of the current numeric code can be adjusted circularly through the Up/Down key, with the setting range of 0 to 30.

Code	Query Content	Additional Notes
0	Error code	Refer to next list of error code
1	Room temperature	T1 temperature
2	Indoor coil temperature	T2 temperature
3	Outdoor coil temperature	T3 temperature
4	Ambient temperature	T4 temperature
5	Discharge temperature	TP temperature
6	Compressor Target Frequency FT	Targeted Frequency
7	Compressor Running Frequency Fr	Actual Frequency
8	Unit Current dL	N/A
9	Outdoor AC Voltage Uo	N/A
10	Current indoor capacity test state Sn	N/A
11	Runnig mode od	
12	Set Speed Pr of the outdoor fan	Outdoor fan speed=value*8
13	Opening Lr of EEV	EXV opening angle-value*8
14	Actual Running Speed ir of the indoor fan	Indoor fan speed=value*8
15	Indoor Humidity Hu	N/A
16	Set Temperature TT after compensation	N/A
17		N/A
18		N/A
19	/	N/A
20	Indoor Target Frequency oT	N/A
21	Reserve	
22		
23		
24		
25		
26		
27		
28		
29		
30		

Exit of engineer mode:
1)In engineer mode, press the key combination of "On/Off + Air speed" for 2s;

2)The engineer mode will be exited if there are no valid key operations for continuous 60s.

Error code of engineer mode

Display	Error Information
EH00/EH0R	Indoor unit EEPROM parameter error
EL01	Indoor / outdoor unit communication error
EH bR	Communication error between indoor unit and indoor external fan module
EH30	Parameters error of indoor external fan
EH35	Phase failure of indoor external fan
EH36	Indoor external fan current sampling bias fault
EH37	Indoor external fan zero speed failure
EH38	Indoor external fan stall failure
EH39	Out of step failure of indoor external fan
EH3R	Low voltage protection of indoor external fan DC bus
EH3b	Indoor external fan DC bus voltage is too high fault
EH3E	Indoor external fan overcurrent fault
EH3F	Indoor external fan module protection/hardware overcurrent protection
EH03	The indoor fan speed is operating outside of the normal range
EC51	Outdoor unit EEPROM parameter error
EC52	Condenser coil temperature sensor T3 is in open circuit or has short circuited
EC53	Outdoor room temperature sensor T4 is in open circuit or has short circuited
EC54	Compressor discharge temperature sensor TP is in open circuit or has short circuited
EC55	IGBT temperature sensor TH is in open circuit or has short circuited
EC0d	Outdoor unit malfunction
EH60	Indoor room temperature sensor T1 is in open circuit or has short circuited
EH61	Evaporator coil temperature sensor T2 is in open circuit or has short circuited
EC71	Outdoor external fan overcurrent fault
EC75	Outdoor external fan module protection/hardware overcurrent protection
EC72	Outdoor external fan phase failure
EC74	Outdoor external fan current sampling bias fault
EC73	Zero speed failure of outdoor unit DC fan
EC07	The outdoor fan speed is operating outside of the normal range(
EL0C	Refrigerant leak detected
EH0b	Communication error between indoor two chips
EH0E	Water-level alarm malfunction
PC00	IPM malfunction or IGBT over-strong current protection
PC10	Over low voltage protection
PC11	Over voltage protection
PC12	DC voltage protection

PC02	Top temperature protection of compressor or High temperature protection of IPM module
PC40	Communication error between outdoor main chip and compressor driven chip
PC41	Current Input detection protection
PC42	Compressor start error
PC43	Lack of phase (3 phase) protection
PC44	Outdoor unit zero speed protection
PC45	341PWM error
PC46	Compressor speed malfunction
PC49	Compressor over current protection
PC06	Compressor discharge temperature protection
PC08	Outdoor current protection
PH09	Anti-cold air in heating mode
PC0F	PFC module malfunction
PC30	System overpressure protection
PC31	System pressure is too low protection
PC03	Pressure protection
PC0L	Outdoor low ambient temperature protection
PH90	Evaporator coil temperature over high protection
PH91	Evaporator coil temperature over low Protection
PC0R	Condenser high temperature protection
PH0C	Indoor unit humidity sensor failure
LH00	Frequency limit caused by T2
LH30	Indoor external fan current limit
LH31	Indoor external fan voltage limit
LC01	Frequency limit caused by T3
LC02	Frequency limit caused by TP
LC05	Frequency limit caused by voltage
LC03	Frequency limit caused by current
LC06	Frequency limit caused by PFC
LC30	Frequency limit caused by high pressure
LC31	Frequency limit caused by low pressure
LH07	Frequency limit caused by remote controller
--	Indoor units mode conflict(match with multi outdoor unit)

4. Outdoor Unit Point Check Function(for some models)

- A check switch is included on the outdoor PCB.
- Push SW1 to check the unit's status while running. The digital display shows the following codes each time the SW1 is pushed.

Number of Presses	Display	Remark
00	Normal display	Displays running frequency, running state, or malfunction code
01	Indoor unit capacity demand code	Actual data*HP*10 If capacity demand code is higher than 99, the digital display tube will show single digit and tens digit. (For example, the digital display tube show "5.0",it means the capacity demand is 15. the digital display tube show "60",it means the capacity demand is 6.0)
02	Amendatory capacity demand code	
03	The frequency after the capacity requirement transfer	
04	The frequency after the frequency limit	
05	The frequency of sending to 341 chip	
06	Indoor unit evaporator temperature (T2)	If the temp. is lower than 0 degree, the digital display tube will show "0".If the temp. is higher than 70 degree, the digital display tube will show "70".
07	Condenser pipe temp.(T3)	If the temp. is lower than -9 degree, the digital display tube will show "-9".If the temp. is higher than 70 degree, the digital display tube will show "70". If the indoor unit is not connected, the digital display tube will show: "--"
08	Outdoor ambient temp.(T4)	
09	Compressor discharge temp. (T5)	The display value is between 13~129 degree. If the temp. is lower than 13 degree, the digital display tube will show "13". If the temp. is higher than 99 degree, the digital display tube will show single digit and tens digit. (For example, the digital display tube show "0.5",it means the compressor discharge temp. is 105 degree. the digital display tube show "1.6",it means the compressor discharge temp. is 116 degree)
10	AD value of current	The display value is a hex number. For example, the digital display tube shows "Cd", it means AD value is 205.
11	AD value of voltage	
12	Indoor unit running mode code	Standby:0, Fan only 1,Cooling:2, Heating:3, Forced cooling:4, Drying:6, Self clean:8
13	Outdoor unit running mode code	Standby:0, Fan only 1,Cooling:2, Heating:3, Forced cooling:4, Drying:6, Self clean:8
14	EXV open angle	Actual data/4. If the value is higher than 99, the digital display tube will show single digit and tens digit. For example, the digital display tube show "2.0",it means the EXV open angle is 120×4=480p.)

<table>
<tr><td rowspan="8">15</td><td rowspan="8">Frequency limit symbol</td><td>Bit7</td><td>Frequency limit caused by IGBT radiator</td><td rowspan="8">The display value is a hexidecimal number. For example, the digital display show 2A, then Bit5=1, Bit3=1, and Bit1=1.

This means that a frequency limit may be caused by T4, T3, or the current.</td></tr>
<tr><td>Bit6</td><td>Frequency limit caused by PFC</td></tr>
<tr><td>Bit5</td><td>Frequency limit caused by high temperature of T2.</td></tr>
<tr><td>Bit4</td><td>Frequency limit caused by low temperature of T2.</td></tr>
<tr><td>Bit3</td><td>Frequency limit caused by T3.</td></tr>
<tr><td>Bit2</td><td>Frequency limit caused by T5.</td></tr>
<tr><td>Bit1</td><td>Frequency limit caused by current</td></tr>
<tr><td>Bit0</td><td>Frequency limit caused by voltage</td></tr>
<tr><td>16</td><td>Outdoor unit fan motor state</td><td colspan="3">Off: 0, Turbo:1 High speed:2, Med speed: 3, Low speed: 4, Breeze:5, Super breeze: 6 other speed:7</td></tr>
<tr><td>17</td><td>IGBT radiator temp.</td><td colspan="3">The display value is between 0~130 degree. If the temp. is higher than 99 degree, the digital display tube will show single digit and tens digit. (For example, the digital display tube show “0.5”,it means the IGBT radiator temp. is 105 degree. the digital display tube show “1.6”,it means the IGBT radiator temp. is 116 degree)</td></tr>
<tr><td>18</td><td>Indoor unit number</td><td colspan="3">The indoor unit can communicate with outdoor unit well.

General:1, Twins:2</td></tr>
<tr><td>19</td><td>Evaporator pipe temp. T2 of 1# indoor unit</td><td colspan="3" rowspan="3">If the temp. is lower than 0 degree, the digital display tube will show “0”.If the temp. is higher than 70 degree, the digital display tube will show “70”. If the indoor unit is not connected, the digital display tube will show: “--”(heating T2, cooling T2B)</td></tr>
<tr><td>20</td><td>Evaporator pipe temp. T2 of 2# indoor unit</td></tr>
<tr><td>21</td><td>Reserved</td></tr>
<tr><td>22</td><td>1# Indoor unit capacity demand code</td><td colspan="3" rowspan="3">Actual data*HP*10

If capacity demand code is higher than 99, the digital display tube will show single digit and tens digit. (For example, the digital display tube show “5.0”,it means the capacity demand is 15. the digital display tube show “60”,it means the capacity demand is 6.0). If the indoor unit is not connected, the digital display tube will show: “--”</td></tr>
<tr><td>23</td><td>2# Indoor unit capacity demand code</td></tr>
<tr><td>24</td><td>Reserved</td></tr>
<tr><td>25</td><td>Room temp. T1 of 1# indoor unit</td><td colspan="3">If the temp. is lower than -9 degree, the digital display tube will show “-9”.If the temp. is higher than 70 degree, the digital display tube will show “70”. If the indoor unit is not connected, the digital display tube will show: “--”</td></tr>
<tr><td>26</td><td>Room temp. T1 of 2# indoor unit</td><td colspan="3">If the temp. is lower than 0 degree, the digital display tube will show “0”.If the temp. is higher than 70 degree, the digital display tube will show “70”. If the indoor unit is not connected, the digital display tube will show: “--”</td></tr>
<tr><td>27</td><td>Average room temp. T1</td><td colspan="3"></td></tr>
<tr><td>28</td><td>Reason of stop</td><td colspan="3"></td></tr>
<tr><td>29</td><td>Evaporator pipe temp. T2B of 1# indoor unit</td><td colspan="3">If the temp. is lower than -9 degree, the digital display tube will show “-9”.If the temp. is higher than 70 degree, the digital display tube will show “70”. If the indoor unit is not connected, the digital display tube will show: “--”</td></tr>
<tr><td>30</td><td>Evaporator pipe temp. T2B of 2# indoor unit</td><td colspan="3">If the temp. is lower than 0 degree, the digital display tube will show “0”.If the temp. is higher than 70 degree, the digital display tube will show “70”. If the indoor unit is not connected, the digital display tube will show: “--”</td></tr>
</table>

5. Error Diagnosis and Troubleshooting Without Error Code

WARNING

Be sure to turn off unit before any maintenance to prevent damage or injury.

5.1 Remote maintenance

SUGGESTION: When troubles occur, please check the following points with customers before field maintenance.

No.	Problem	Solution
1	Unit will not start	TS17 - TS18
2	The power switch is on but fans will not start	TS17 - TS18
3	The temperature on the display board cannot be set	TS17 - TS18
4	Unit is on but the wind is not cold(hot)	TS17 - TS18
5	Unit runs, but shortly stops	TS17 - TS18
6	The unit starts up and stops frequently	TS17 - TS18
7	Unit runs continuously but insufficient cooling(heating)	TS17 - TS18
8	Cool can not change to heat	TS17 - TS18
9	Unit is noisy	TS17 - TS18

5.2 Field maintenance

	Problem	Solution
1	Unit will not start	TS19 - TS20
2	Compressor will not start but fans run	TS19 - TS20
3	Compressor and condenser (outdoor) fan will not start	TS19 - TS20
4	Evaporator (indoor) fan will not start	TS19 - TS20
5	Condenser (Outdoor) fan will not start	TS19 - TS20
6	Unit runs, but shortly stops	TS19 - TS20
7	Compressor short-cycles due to overload	TS19 - TS20
8	High discharge pressure	TS19 - TS20
9	Low discharge pressure	TS19 - TS20
10	High suction pressure	TS19 - TS20
11	Low suction pressure	TS19 - TS20
12	Unit runs continuously but insufficient cooling	TS19 - TS20
13	Too cool	TS19 - TS20
14	Compressor is noisy	TS19 - TS20
15	Horizontal louver can not revolve	TS19 - TS20

1.Remote Maintenance	Electrical Circuit							Refrigerant Circuit							
Possible causes of trouble	Power failure	The main power tripped	Loose connections	Faulty transformer	The voltage is too high or too low	The remote control is powered off	Broken remote control	Dirty air filter	Dirty condenser fins	The setting temperature is higher/lower than the room's(cooling/heating)	The ambient temperature is too high/low when the mode is cooling/heating	Fan mode	SILENCE function is activated(optional function)	Frosting and defrosting frequently	
Unit will not start	☆	☆	☆	☆											
The power switch is on but fans will not start			☆	☆	☆										
The temperature on the display board cannot be set						☆	☆								
Unit is on but the wind is not cold(hot)										☆	☆	☆			
Unit runs, but shortly stops					☆					☆	☆				
The unit starts up and stops frequently					☆						☆			☆	
Unit runs continuously but insufficient cooling(heating)								☆	☆	☆	☆		☆		
Cool can not change to heat															
Unit is noisy															
Test method / remedy	Test voltage	Close the power switch	Inspect connections - tighten	Change the transformer	Test voltage	Replace the battery of the remote control	Replace the remote control	Clean or replace	Clean	Adjust the setting temperature	Turn the AC later	Adjust to cool mode	Turn off SILENCE function.	Turn the AC later	

1.Remote Maintenance	Others					
Possible causes of trouble	Heavy load condition	Loosen hold down bolts and / or screws	Bad airproof	The air inlet or outlet of either unit is blocked	Interference from cell phone towers and remote boosters	Shipping plates remain attached
Unit will not start						
The power switch is on but fans will not start					☆	
The temperature on the display board cannot be set						
Unit is on but the wind is not cold(hot)						
Unit runs, but shortly stops						
The unit starts up and stops frequently				☆		
Unit runs continuously but insufficient cooling(heating)	☆		☆	☆		
Cool can not change to heat						
Unit is noisy		☆				☆
Test method / remedy	Check heat load	Tighten bolts or screws	Close all the windows and doors	Remove the obstacles	Reconnect the power or press **ON/OFF** button on remote control to restart operation	Remove them

2.Field Maintenance	Refrigerant Circuit																			Others					
Possible causes of trouble	Compressor stuck	Shortage of refrigerant	Restricted liquid line	Dirty air filter	Dirty evaporator coil	Insufficient air through evaporator coil	Overcharge of refrigerant	Dirty or partially blocked condenser	Air or incompressible gas in refrigerant cycle	Short cycling of condensing air	High temperature condensing medium	Insufficient condensing medium	Broken compressor internal parts	Inefficient compressor	Expansion valve obstructed	Expansion valve or capillary tube closed completely	Leaking power element on expansion valve	Poor installation of feeler bulb	Heavy load condition	Loosen hold down bolts and / or screws	Shipping plates remain attached	Poor choices of capacity	Contact of piping with other piping or external plate
Unit will not start																									
Compressor will not start but fans run	☆																								
Compressor and condenser (outdoor) fan will not start																									
Evaporator (indoor) fan will not start																									
Condenser (Outdoor) fan will not start																									
Unit runs, but shortly stops		☆	☆				☆	☆								☆	☆								
Compressor short-cycles due to overload		☆					☆	☆																	
High discharge pressure							☆	☆	☆	☆	☆	☆													
Low discharge pressure		☆												☆											
High suction pressure							☆							☆				☆	☆						
Low suction pressure		☆	☆	☆	☆	☆									☆	☆	☆								
Unit runs continuously but insufficient cooling		☆	☆	☆	☆	☆		☆	☆	☆				☆					☆			☆			
Too cool																									
Compressor is noisy							☆						☆							☆	☆		☆		
Horizontal louver can not revolve																									
Test method / remedy	Replace the compressor	Leak test	Replace restricted part	Clean or replace	Clean coil	Check fan	Change charged refrigerant volume	Clean condenser or remove obstacle	Purge, evacuate and recharge	Remove obstruction to air flow	Remove obstruction in air or water flow	Remove obstruction in air or water flow	Replace compressor	Test compressor efficiency	Replace valve	Replace valve	Replace valve	Fix feeler bulb	Check heat load	Tighten bolts or screws	Remove them	Choose AC of lager capacity or add the number of AC	Rectify piping so as not to contact each other or with external plate		

2.Field Maintenance	Electrical Circuit														
Possible causes of trouble	Power failure	Blown fuse or varistor	Loose connections	Shorted or broken wires	Safety device opens	Faulty thermostat / room temperature sensor	Wrong setting place of temperature sensor	Faulty transformer	Shorted or open capacitor	Faulty magnetic contactor for compressor	Faulty magnetic contactor for fan	Low voltage	Faulty stepping motor	Shorted or grounded compressor	Shorted or grounded fan motor
Unit will not start	☆	☆	☆	☆	☆			☆							
Compressor will not start but fans run				☆		☆			☆	☆				☆	
Compressor and condenser (outdoor) fan will not start				☆		☆				☆					
Evaporator (indoor) fan will not start				☆					☆		☆				☆
Condenser (Outdoor) fan will not start				☆		☆			☆		☆				☆
Unit runs, but shortly stops										☆		☆			
Compressor short-cycles due to overload										☆		☆			
High discharge pressure															
Low discharge pressure															
High suction pressure															
Low suction pressure															
Unit runs continuously but insufficient cooling															
Too cool						☆	☆								
Compressor is noisy															
Horizontal louver can not revolve			☆	☆									☆		
Test method / remedy	Test voltage	Inspect fuse type & size	Inspect connections - tighten	Test circuits with tester	Test continuity of safety device	Test continuity of thermostat / sensor & wiring	Place the temperature sensor at the central of the air inlet grille	Check control circuit with tester	Check capacitor with tester	Test continuity of coil & contacts	Test continuity of coil & contacts	Test voltage	Replace the stepping motor	Check resistance with multimeter	Check resistance with multimeter

6. Quick Maintenance by Error Code

If you do not have the time to test which specific parts are faulty, you can directly change the required parts according the error code.

You can find the parts to replace by error code in the following table.

Part requiring replacement	Error Code							
	EH00/EH08	EL01	EH03	EH60	EH61	EL0C	EH0E	EC53
Indoor PCB	✓	✓	✓	✓	✓	✓	✓	x
Outdoor PCB	x	✓	x	x	x	x	x	✓
Indoor fan motor	x	x	✓	x	x	x	x	x
T1 sensor	x	x	x	✓	x	x	x	x
T2 Sensor	x	x	x	x	✓	✓	✓	x
T3 Sensor	x	x	x	x	x	x	x	x
T4 Sensor	x	x	x	x	x	x	x	✓
Reactor	x	✓	x	x	x	x	x	x
Compressor	x	x	x	x	x	x	x	x
Additional refrigerant	x	x	x	x	x	✓	✓	x
Water-level switch	x	x	x	x	x	x	✓	x
Water pump	x	x	x	x	x	x	✓	x

Part requiring replacement	EC54	EC51	EC52	EC07	PC00	PC01	PC02	PC04	PC03
Indoor PCB	x	x	x	x	x	x	x	x	x
Outdoor PCB	✓	✓	✓	✓	✓	✓	✓	✓	✓
Outdoor fan motor	x	x	x	✓	✓	x	✓	✓	x
T3 Sensor	x	x	✓	x	x	x	x	x	x
TP Sensor	✓	x	x	x	x	x	x	x	x
Reactor	x	x	x	x	x	✓	x	x	x
Compressor	x	x	x	x	✓	x	x	✓	x
IPM module board	x	x	x	x	✓	✓	✓	✓	x
Low pressure protector	x	x	x	x	x	x	x	x	✓
Additional refrigerant	x	x	x	x	x	x	x	x	✓

Note: For certain models, outdoor PCB could not be removed separately. In this case, the outdoor electric control box should be replaced as a whole.

7. Troubleshooting by Error Code

7.1 EH 00/ EH 0A / EC 51 (EEPROM Parameter Error Diagnosis and Solution)

Description: Indoor or outdoor PCB main chip does not receive feedback from EEPROM chip.

Recommended parts to prepare:

- Indoor PCB
- Outdoor PCB

Troubleshooting and repair:

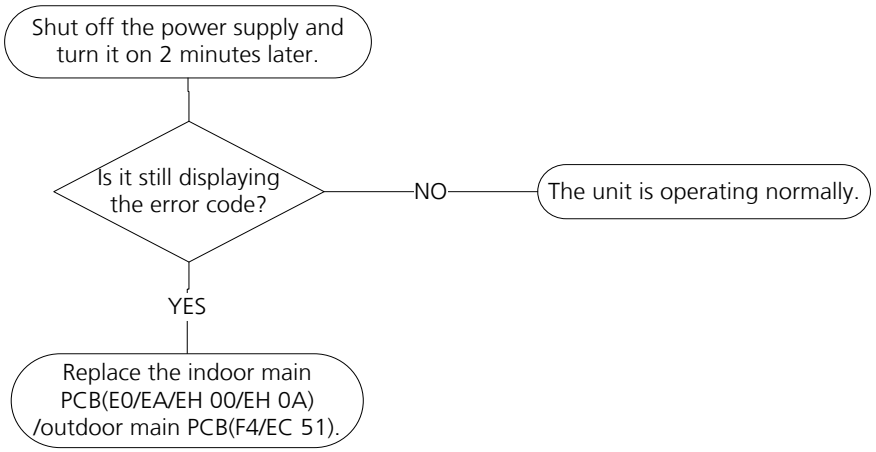

Remarks:
EEPROM: A read-only memory whose contents can be erased and reprogrammed using a pulsed voltage.

The location of the EEPROM chip on the indoor and outdoor PCB is shown in the following two images:

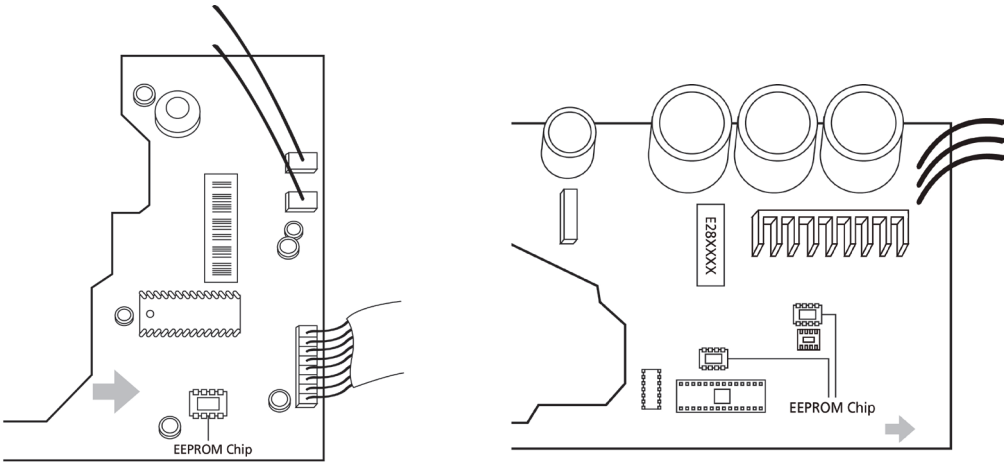

Note: For certain models, outdoor PCB could not be removed separately. In this case, the outdoor electric control box should be replaced as a whole. This pictures are only for reference, actual appearance may vary.

Troubleshooting and repair of compressor driven chip EEPROM parameter error and communication error between outdoor main chip and compressor driven chip are same as EC 51.

7.2 EL 01 (Indoor and Outdoor Unit Communication Error Diagnosis and Solution)

Description: Indoor unit can not communicate with outdoor unit

Recommended parts to prepare:

- Indoor PCB
- Outdoor PCB
- Reactor

Troubleshooting and repair:

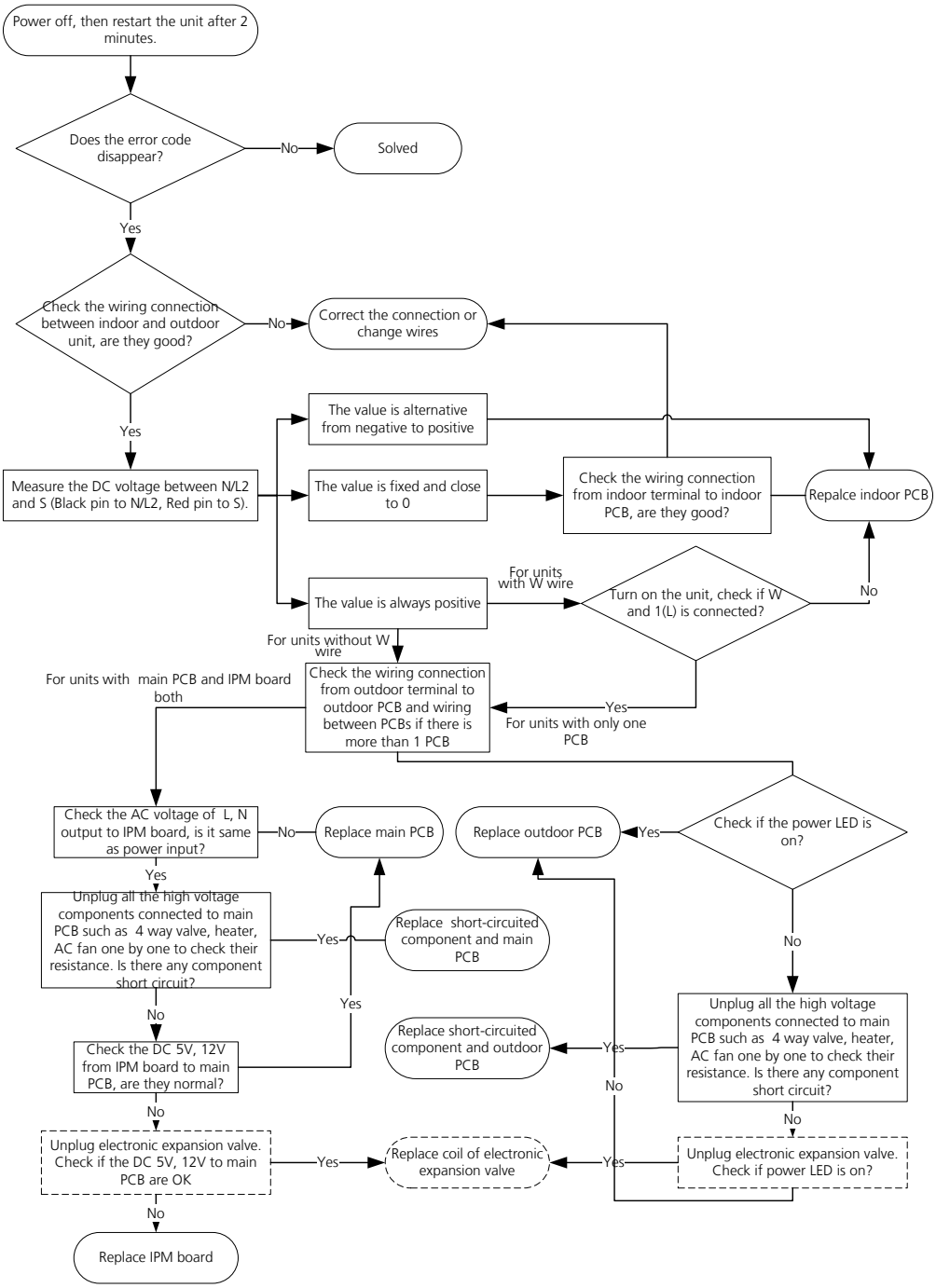

Note: For certain models, outdoor PCB could not be removed separately. In this case, the outdoor electric

control box should be replaced as a whole.

Remarks:

- Use a multimeter to test the DC voltage between 2 port(or S or L2 port) and 3 port(or N or S port) of outdoor unit. The red pin of multimeter connects with 2 port(or S or L2 port) while the black pin is for 3 port(or N or S port) .
- When AC is operating normally, the voltage is moving alternately as positive values and negative values
- If the outdoor unit has malfunction, the voltage has always been the positive value.
- While if the indoor unit has malfunction, the voltage has always been a certain value.

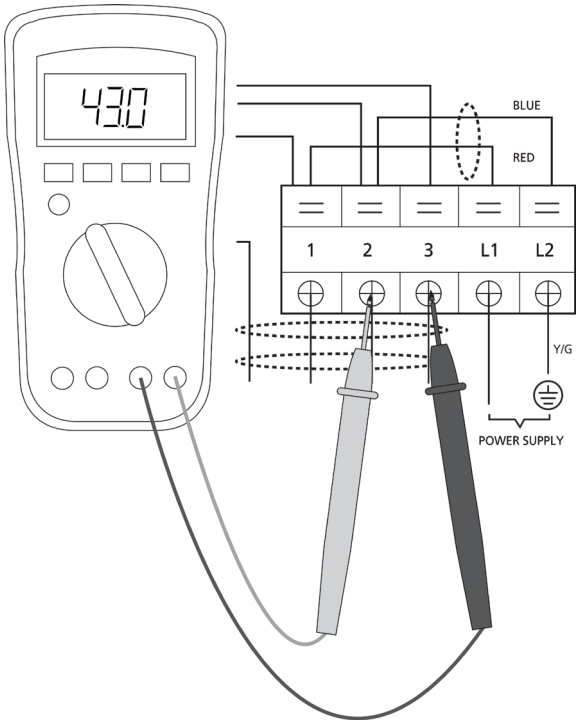

S and N or L2 and S or 2 and 3

- Use a multimeter to test the resistance of the reactor which does not connect with capacitor.
- The normal value should be around zero ohm. Otherwise, the reactor must have malfunction.

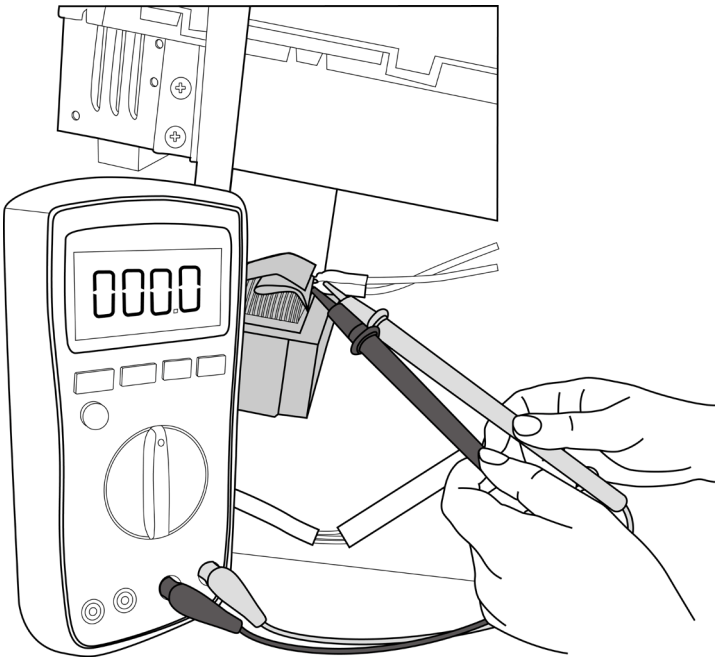

Note: The picture and the value are only for reference, actual condition and specific value may vary.

7.3 EH 03 / EC 07 (Fan Speed Is Operating Outside of Normal Range)/EC 71(Over Current Failure of Outdoor DC Fan Motor) Diagnosis and Solution

Description: When indoor / outdoor fan speed keeps too low or too high for a certain time, the unit ceases operation and the LED displays the failure.

Recommended parts to prepare:

- Connection wires
- Fan assembly
- Fan motor
- PCB

Troubleshooting and repair:

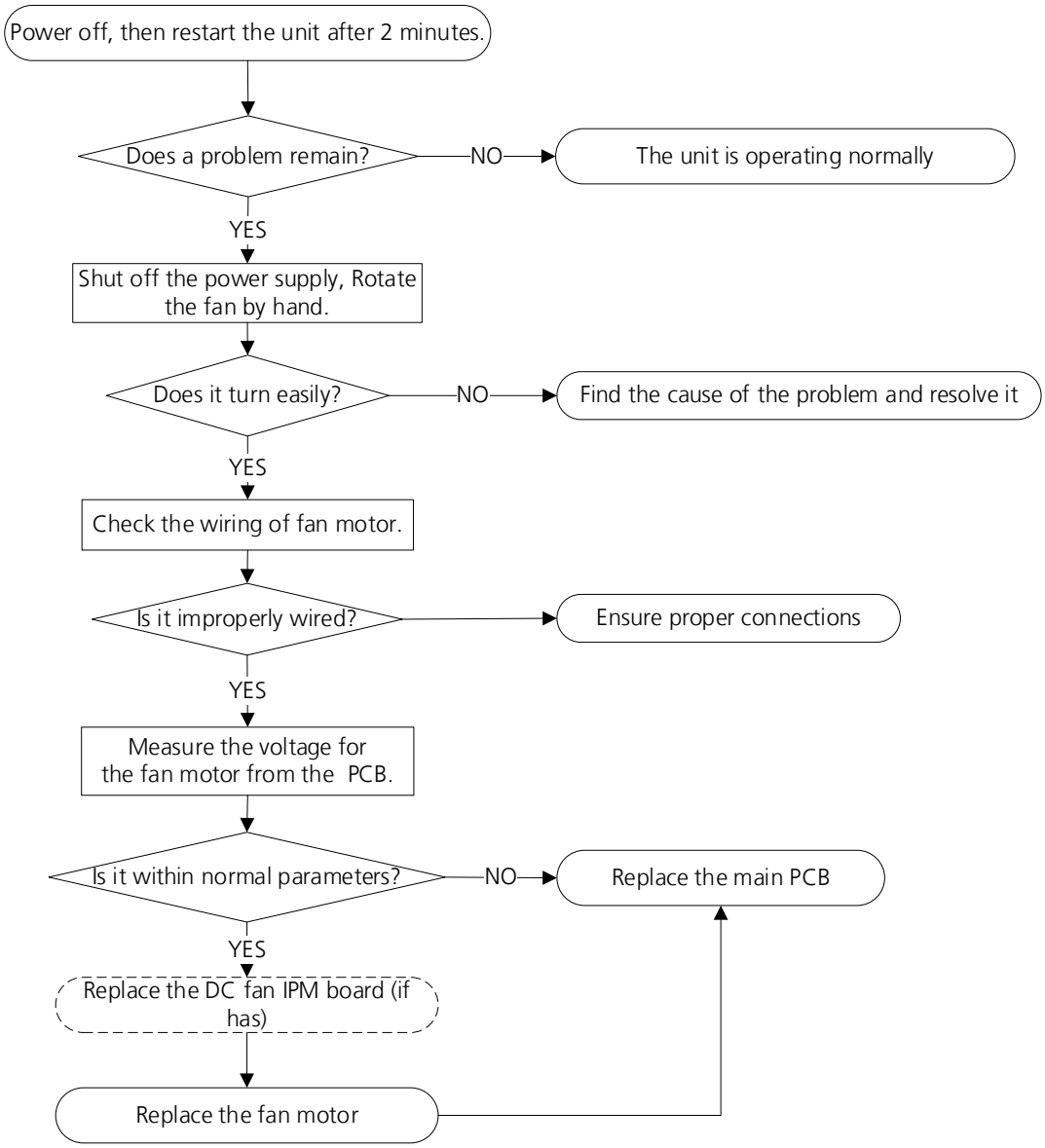

Note: For certain models, outdoor PCB could not be removed separately. In this case, the outdoor electric control box should be replaced as a whole.

Index:

1. Indoor or Outdoor DC Fan Motor(control chip is in fan motor)

Power on and when the unit is in standby, measure the voltage of pin1-pin3, pin4-pin3 in fan motor connector. If the value of the voltage is not in the range showing in below table, the PCB must has problems and need to be replaced.

No.	Color	Signal	Voltage
1	Red	Vs/Vm	192V~380V
2	---	---	---
3	Black	GND	0V
4	White	Vcc	13.5-16.5V
5	Yellow	Vsp	0~6.5V
6	Blue	FG	13.5-16.5V

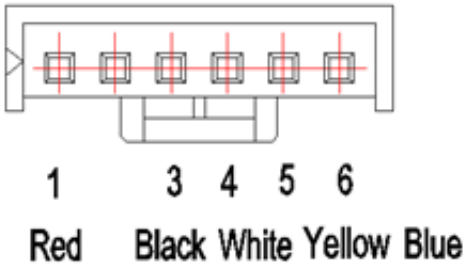

2.Indoor DC Fan IPM Board (Duct and Ceiling-floor Unit)

Power on and when the unit is in standby, measure the voltage of CON1, pin1-pin2 and pin3-pin2 of CN1 in DC motor driver board. If the value of the voltage is not in the range showing in below tables, the indoor main PCB must has problems and need to be replaced.

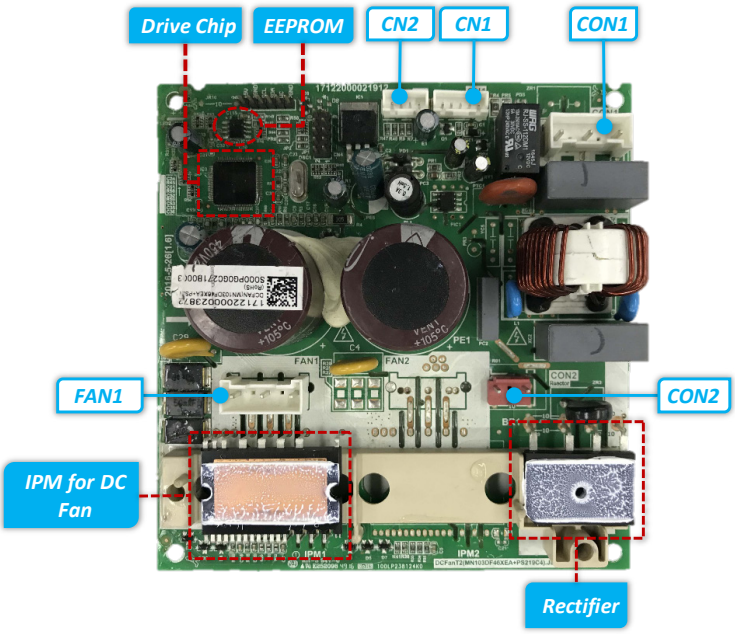

Port	Description	Parameter	Remark
CON1	Power input for the PCB	230V/AC	
CN1	Communication with main PCB	DC	
CN2	Test port	5V/DC	For debugging board
CN23	UVW output for DC fan motor		
CON2	Ports for reactor		

CN1 Communication with main PCB

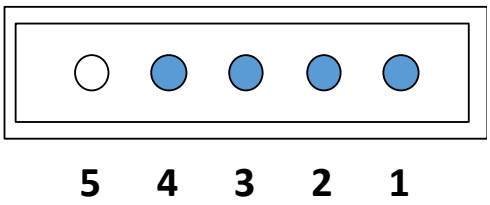

NO.	Signal	Voltage
1	Vcc	+15V
2	GND	
3	TXD	0~6V
4	RXD	0~15V
5	--	--

3. Outdoor DC Fan Motor (control chip is in outdoor PCB)

Release the UVW connector. Measure the resistance of U-V, U-W, V-W. If the resistance is not equal to each other, the fan motor must has problems and need to be replaced. otherwise the PCB must has problems and need to be replaced.

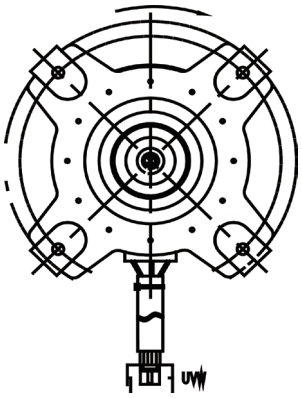

4. Outdoor DC Fan IPM Board(for some double fan models)

Power on and when the unit is in standby, measure the voltage of CON1, pin1-pin2 and pin3-pin2 of CN1 in DC motor driver board. If the value of the voltage is not in the range showing in below tables, the outdoor main PCB must has problems and need to be replaced.

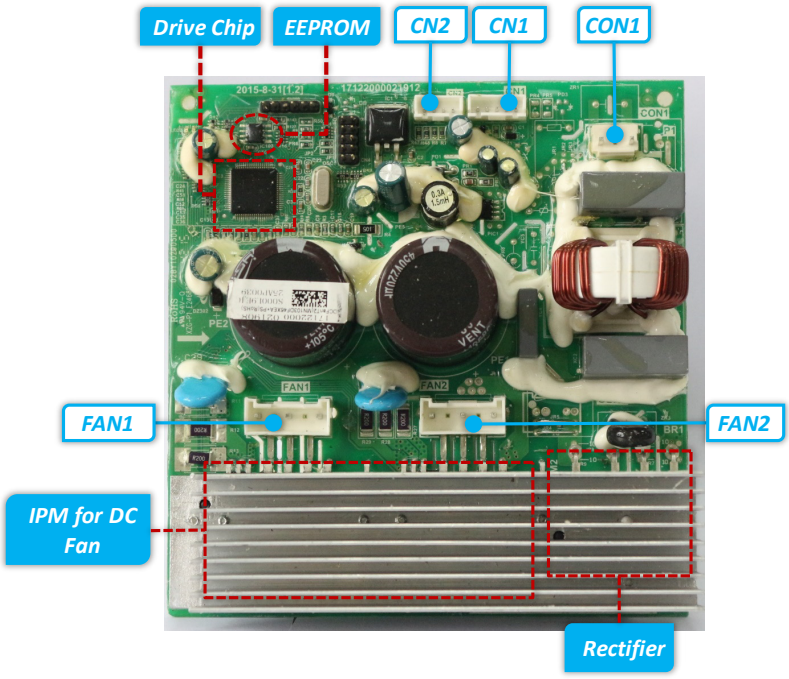

Part	Description	Parameter	Remark
CON1	Power input for the PCB	192-380V/DC	
CN1	Communication with main PCB	DC	
CN2	Test port	5V/DC	For debugging board
FAN1	UVW output for DC fan motor		
FAN2	UVW output for DC fan motor		

CN1 Communication with main PCB

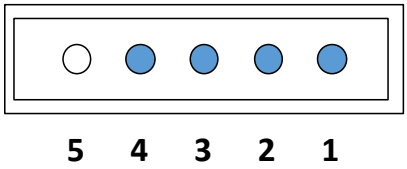

No.	Signal	Voltage
1	Vcc	13.5-16.5V
2	GND	0V
3	Vsp	0~6.5V
4	FG	13.5-16.5V
5	---	---

7.4 EH 60/EH 61/EC 53/EC 52/EC 54/EC 56/EC 50 (Open Circuit or Short Circuit of Temperature Sensor Diagnosis and Solution)

Description: If the sampling voltage is lower than 0.06V or higher than 4.94V, the LED displays the failure.

Recommended parts to prepare:

- Connection wires
- Sensors
- PCB

Troubleshooting and repair:

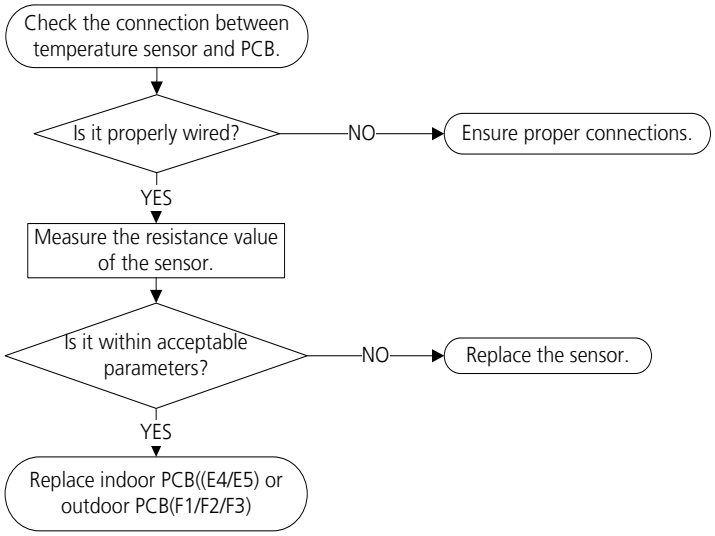

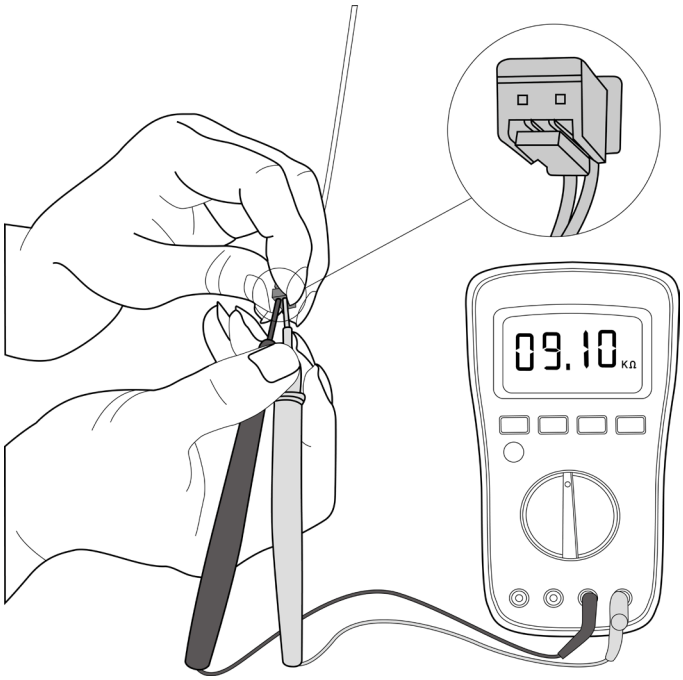

Note: For certain models, outdoor PCB could not be removed separately. In this case, the outdoor electric control box should be replaced as a whole. This picture and the value are only for reference, actual appearance and value may vary

7.5 EL 0C (Refrigerant Leakage Detection Diagnosis and Solution)

Description:

Judging the abnormality of the refrigeration system according to the number of compressor stops and the changes in operating parameters caused by excessive exhaust temperature.

Recommended parts to prepare:

- Indoor PCB
- Additional refrigerant

Troubleshooting and repair:

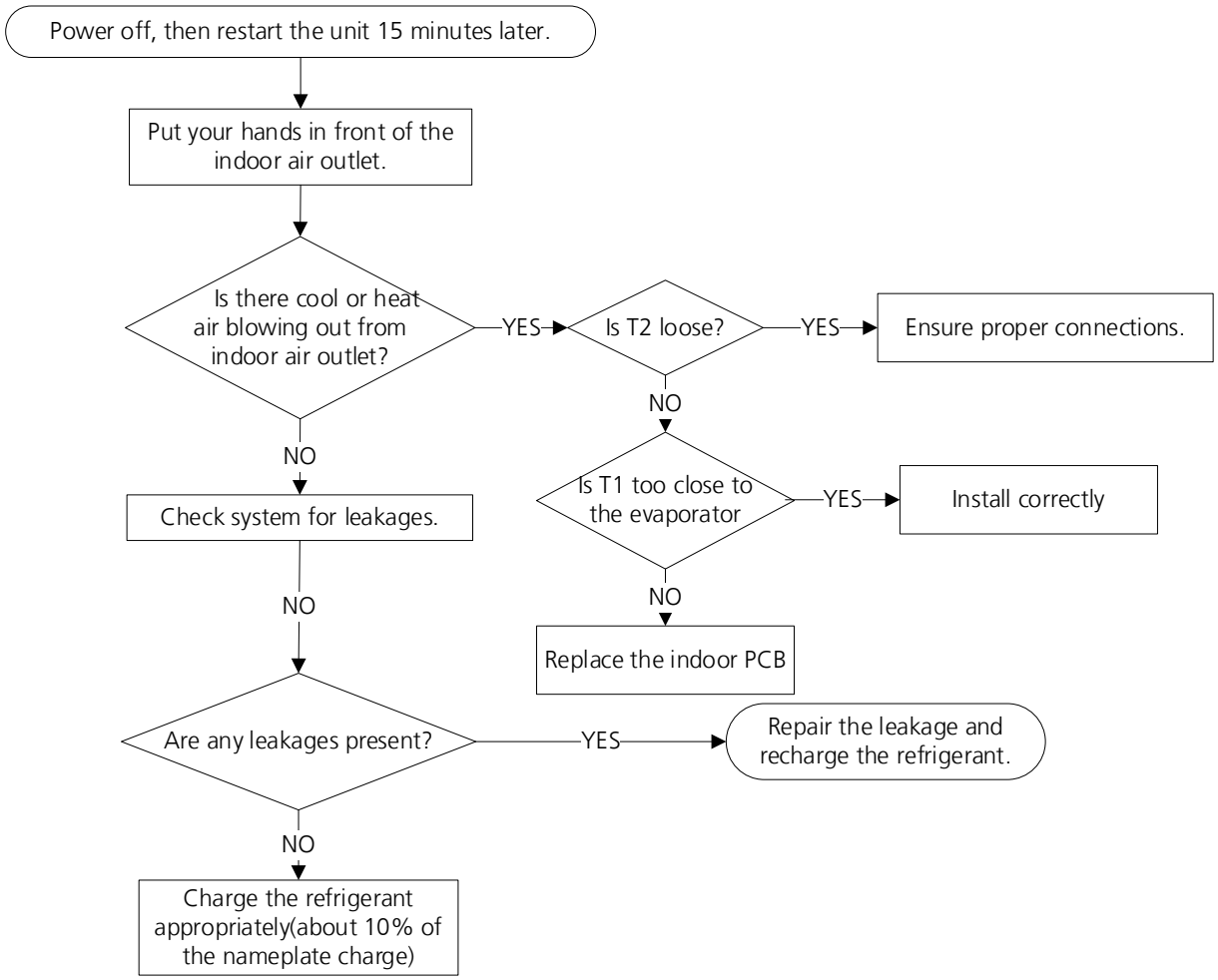

7.6 EH 0E(Water-Level Alarm Malfunction Diagnosis and Solution)

Description: If the sampling voltage is not 5V, the LED displays the failure code.

Recommended parts to prepare:

- Connection wires
- Water-level switch
- Water pump
- Indoor PCB

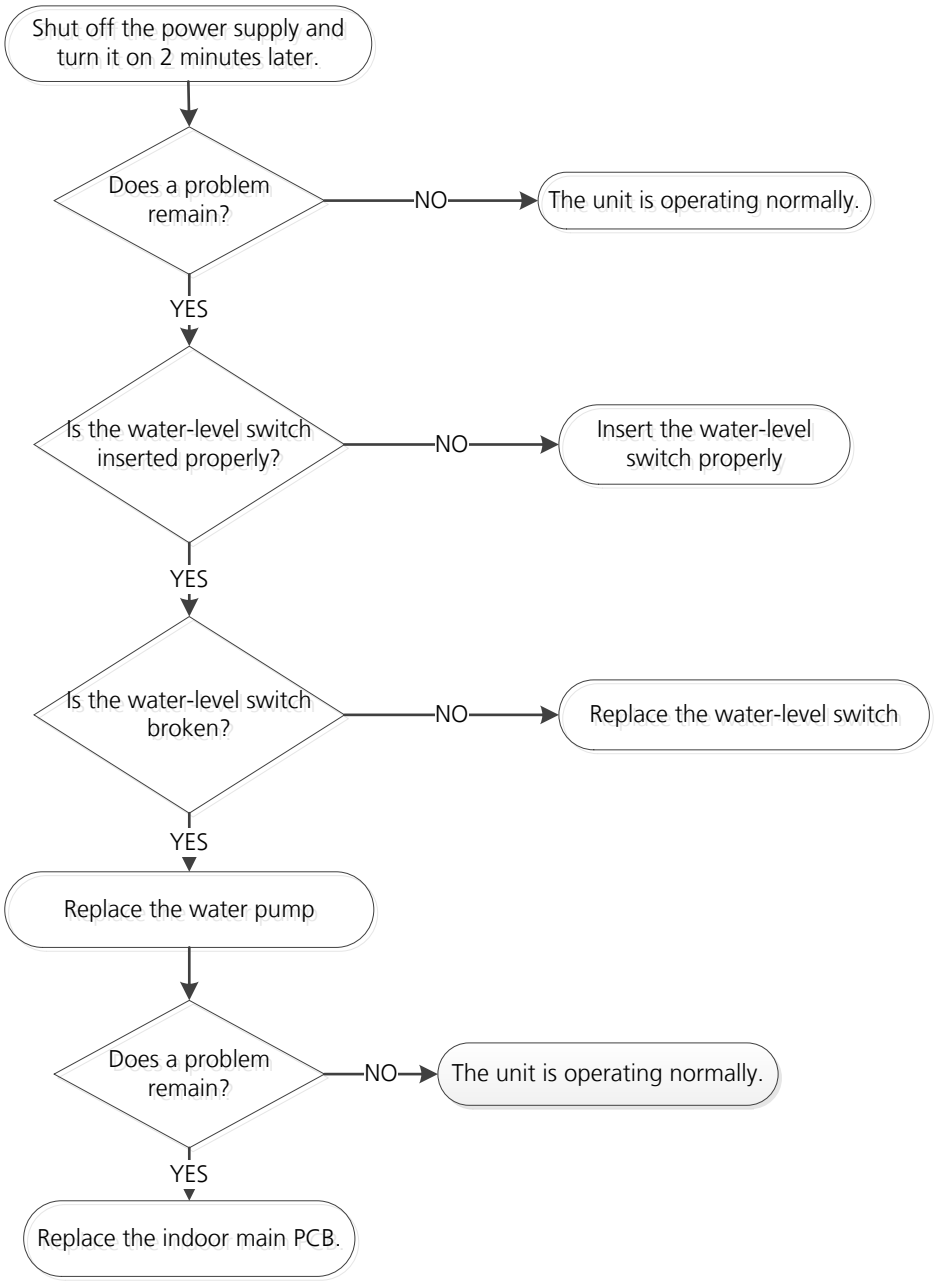

7.7 PC 00(IPM malfunction or IGBT over-strong current protection Diagnosis and Solution)

Description: When the voltage signal the IPM sends to the compressor drive chip is abnormal, the display LED shows "PC 00" and the AC turn off.

Recommended parts to prepare:

- Connection wires
- IPM module board
- Outdoor fan assembly
- Compressor
- Outdoor PCB

Troubleshooting and repair:

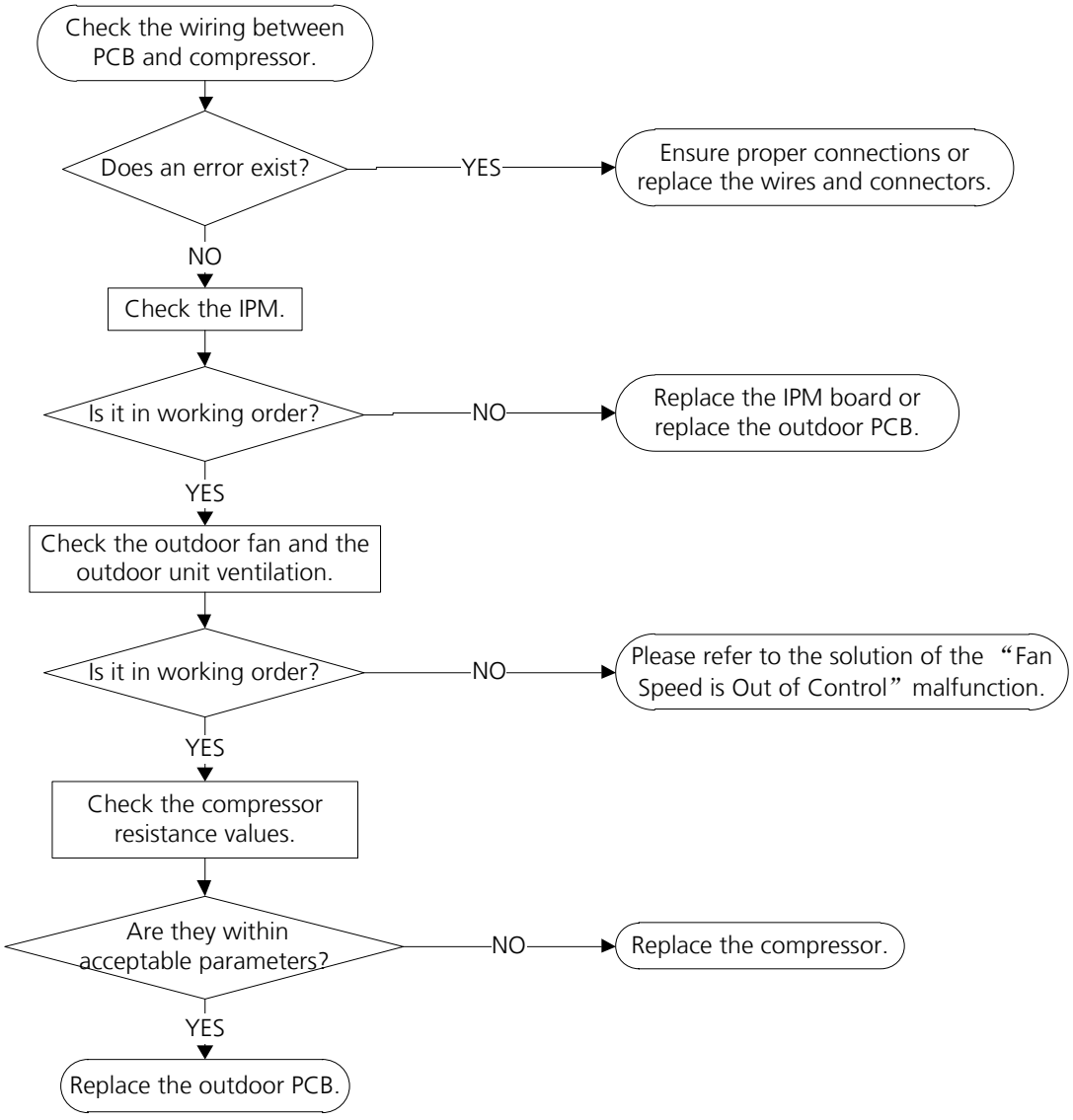

Note: For certain models, outdoor PCB could not be removed separately. In this case, the outdoor electric control box should be replaced as a whole.

7.8 PC 01(Over voltage or too low voltage protection)/PC 10(Outdoor unit low AC voltage protection)/PC 11(Outdoor unit main control board DC bus high voltage protection)/PC 12(Outdoor unit main control board DC bus high voltage protection /341 MCE error) Diagnosis and Solution

Description: Abnormal increases or decreases in voltage are detected by checking the specified voltage detection circuit.

Recommended parts to prepare:

- Power supply wires
- IPM module board
- PCB
- Reactor

Troubleshooting and repair:

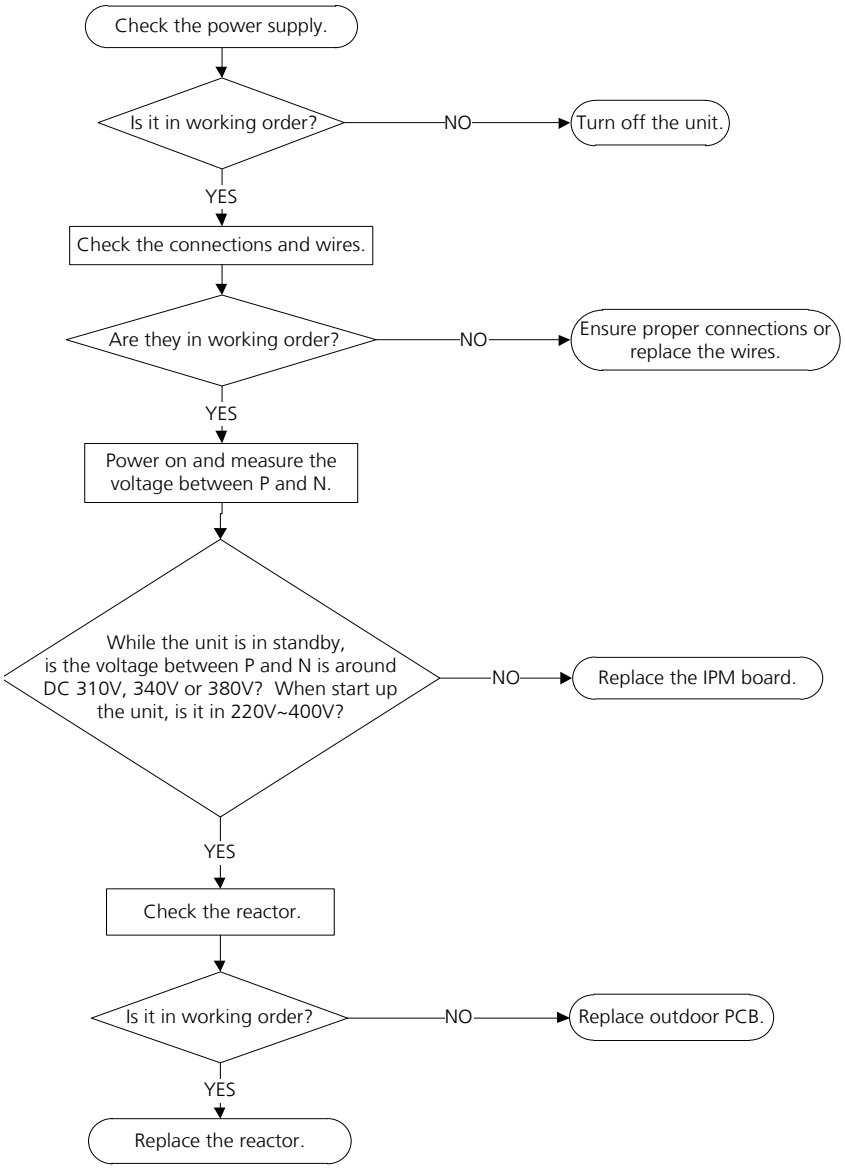

Note: For certain models, outdoor PCB could not be removed separately. In this case, the outdoor electric control box should be replaced as a whole.

7.9 PC 04(Inverter compressor drive error Diagnosis and Solution)

Description: An abnormal inverter compressor drive is detected by a special detection circuit, including communication signal detection, voltage detection, compressor rotation speed signal detection and so on.

Recommended parts to prepare:

- Connection wires
- IPM module board
- Outdoor fan assembly
- Compressor
- Outdoor PCB

Troubleshooting and repair:

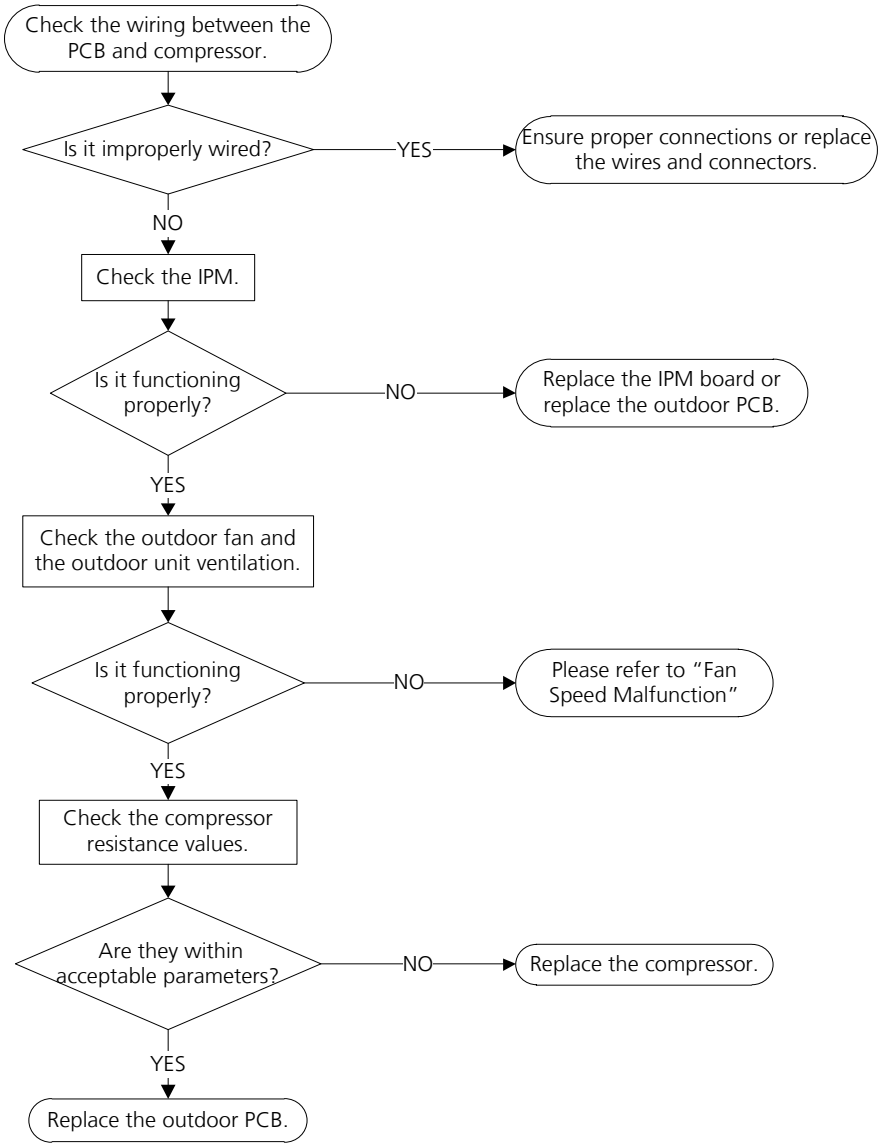

Note: For certain models, outdoor PCB could not be removed separately. In this case, the outdoor electric control box should be replaced as a whole.

7.10 PC 03/PC 31(Low Pressure Protection Diagnosis and Solution)

Description: If the sampling voltage is not 5V, the LED displays a failure code.

Recommended parts to prepare:

- Connection wires
- Low pressure protector
- Indoor fan assembly
- Outdoor PCB

Troubleshooting and repair:

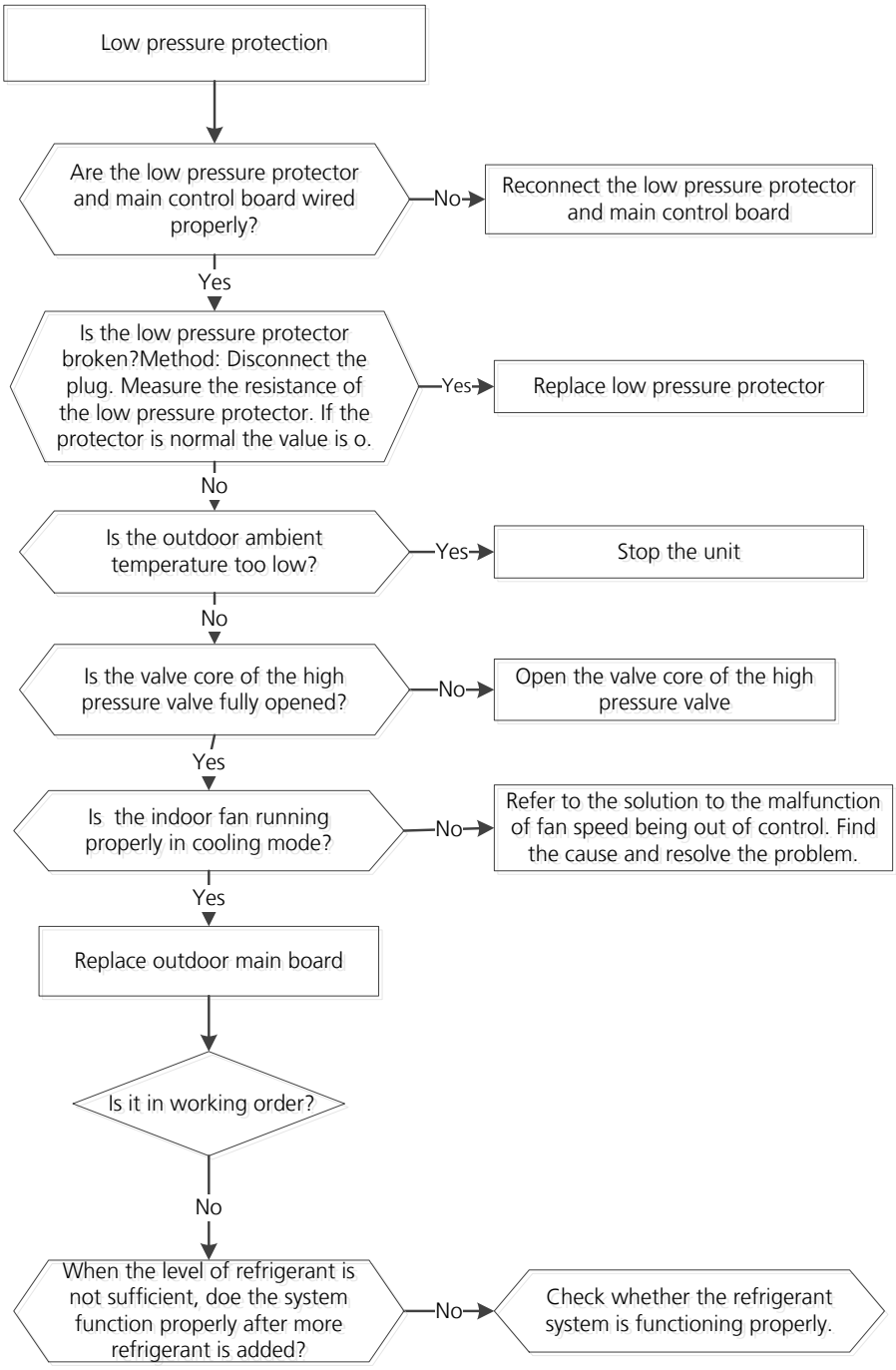

Note: For certain models, outdoor PCB could not be removed separately. In this case, the outdoor electric control box should be replaced as a whole.

7.11 PC 02(Top temperature protection of compressor or High temperature protection of IPM module diagnosis and solution)

Description: For some models with overload protection, If the sampling voltage is not 5V, the LED will display the failure.

If the temperature of IPM module is higher than a certain value, the LED displays the failure code.

Recommended parts to prepare:

- Connection wires
- Outdoor PCB
- IPM module board
- High pressure protector
- System blockages

Troubleshooting and repair:

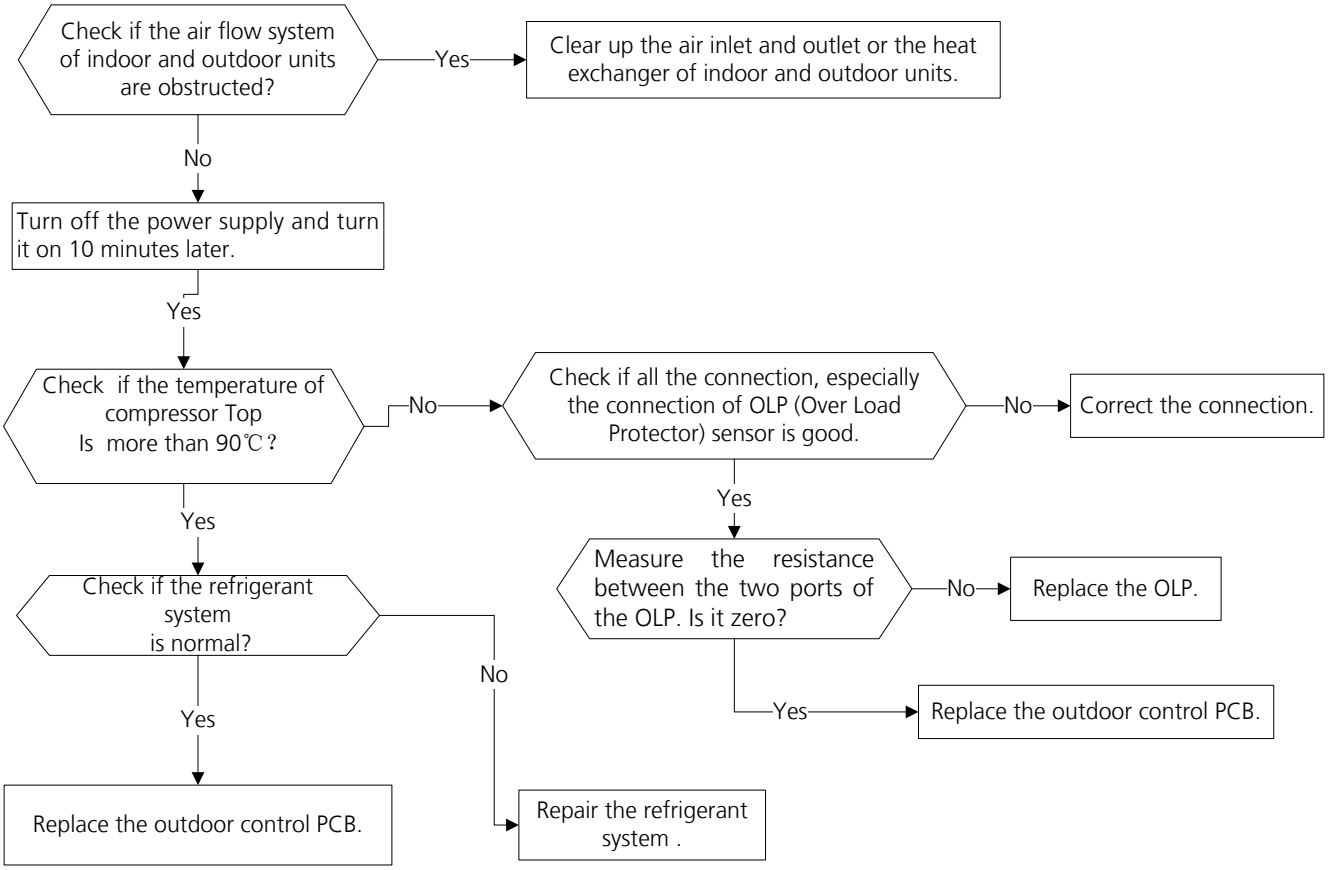

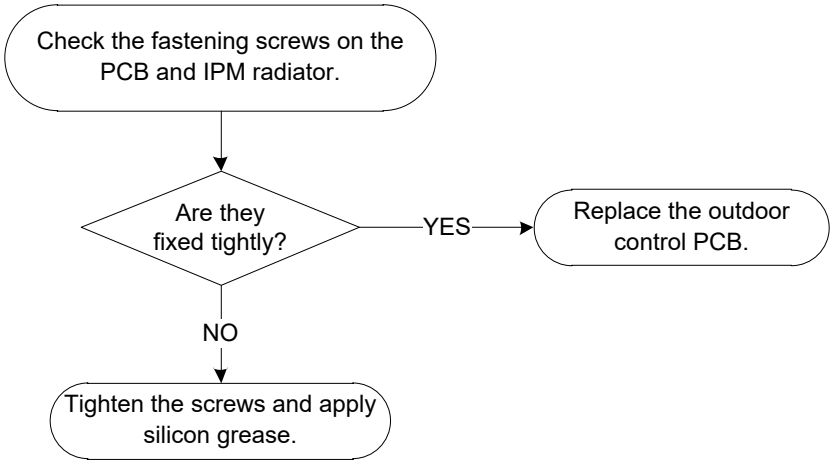

7.12 EC 0d(Outdoor unit malfunction Diagnosis and Solution)

Description: The indoor unit detect the outdoor unit is error.

Recommended parts to prepare:

- Outdoor unit

Troubleshooting and repair:

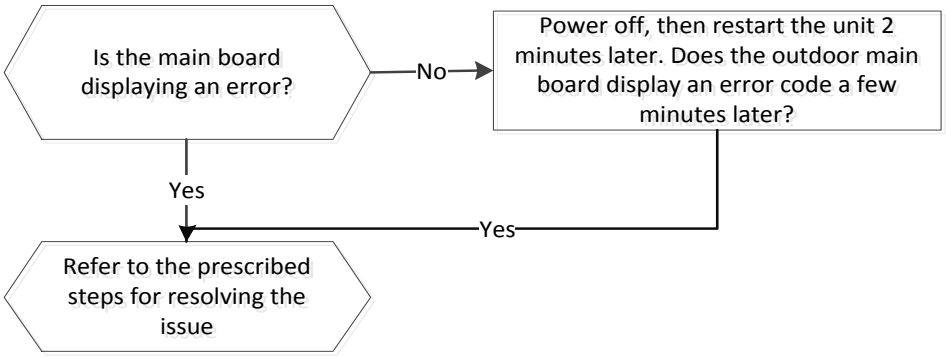

7.13 PC 40(Communication error between outdoor main PCB and IPM board diagnosis and solution)

Description: The main PCB cannot detect the IPM board.

Recommended parts to prepare:

- Connection wires
- IPM board
- Outdoor main PCB
- Electric control box

Troubleshooting and repair:

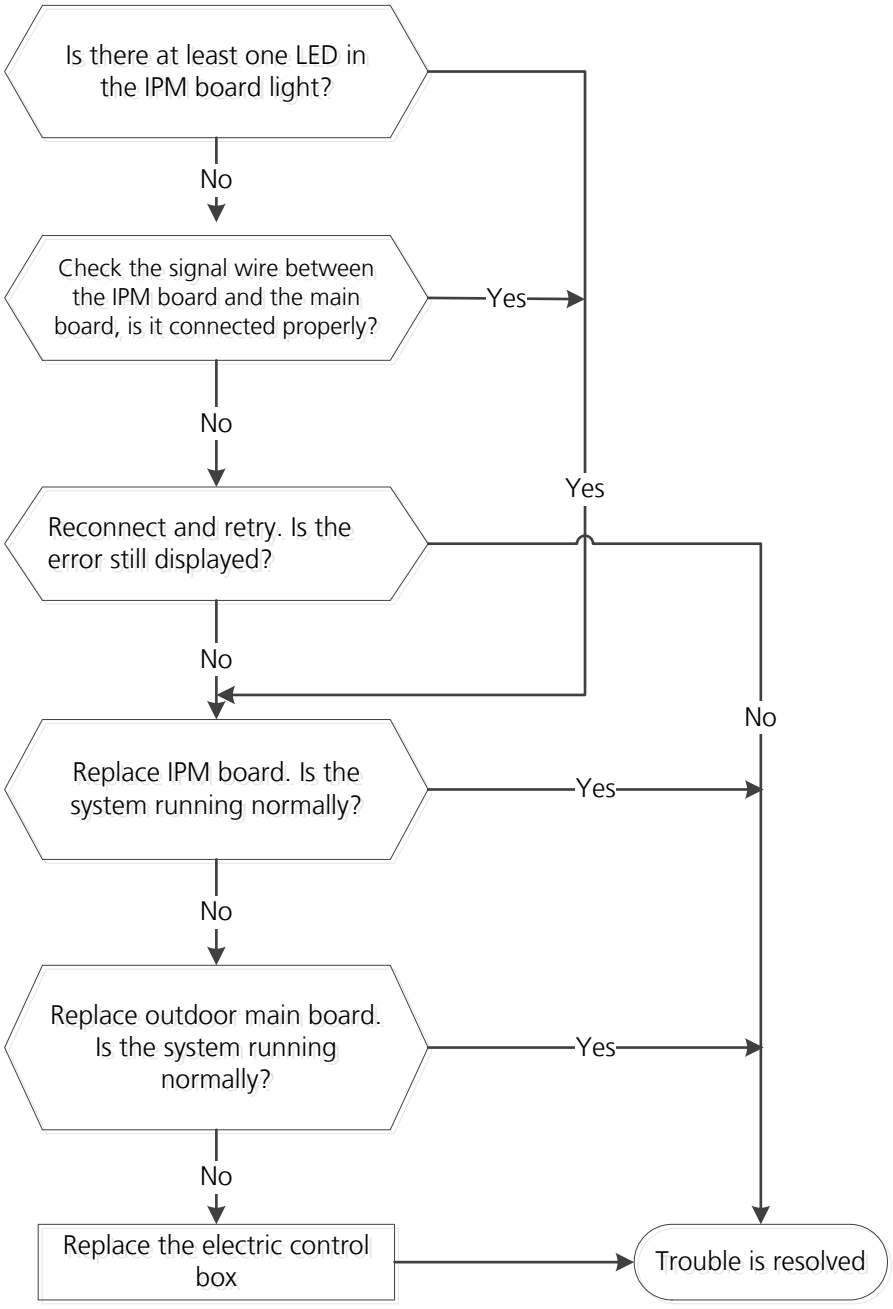

7.14 PC 08(Current overload protection)/PC 44(Outdoor unit zero speed protection)/ PC 46(Compressor speed has been out of control)/PC 49(Compressor overcurrent failure) diagnosis and solution

Description: An abnormal current rise is detected by checking the specified current detection circuit.

Recommended parts to prepare:

- Connection wires
- Rectifier
- PFC circuit or reactor
- Blocked refrigeration piping system
- Pressure switch
- Outdoor fan
- IPM module board
- Outdoor PCB

Troubleshooting and repair:

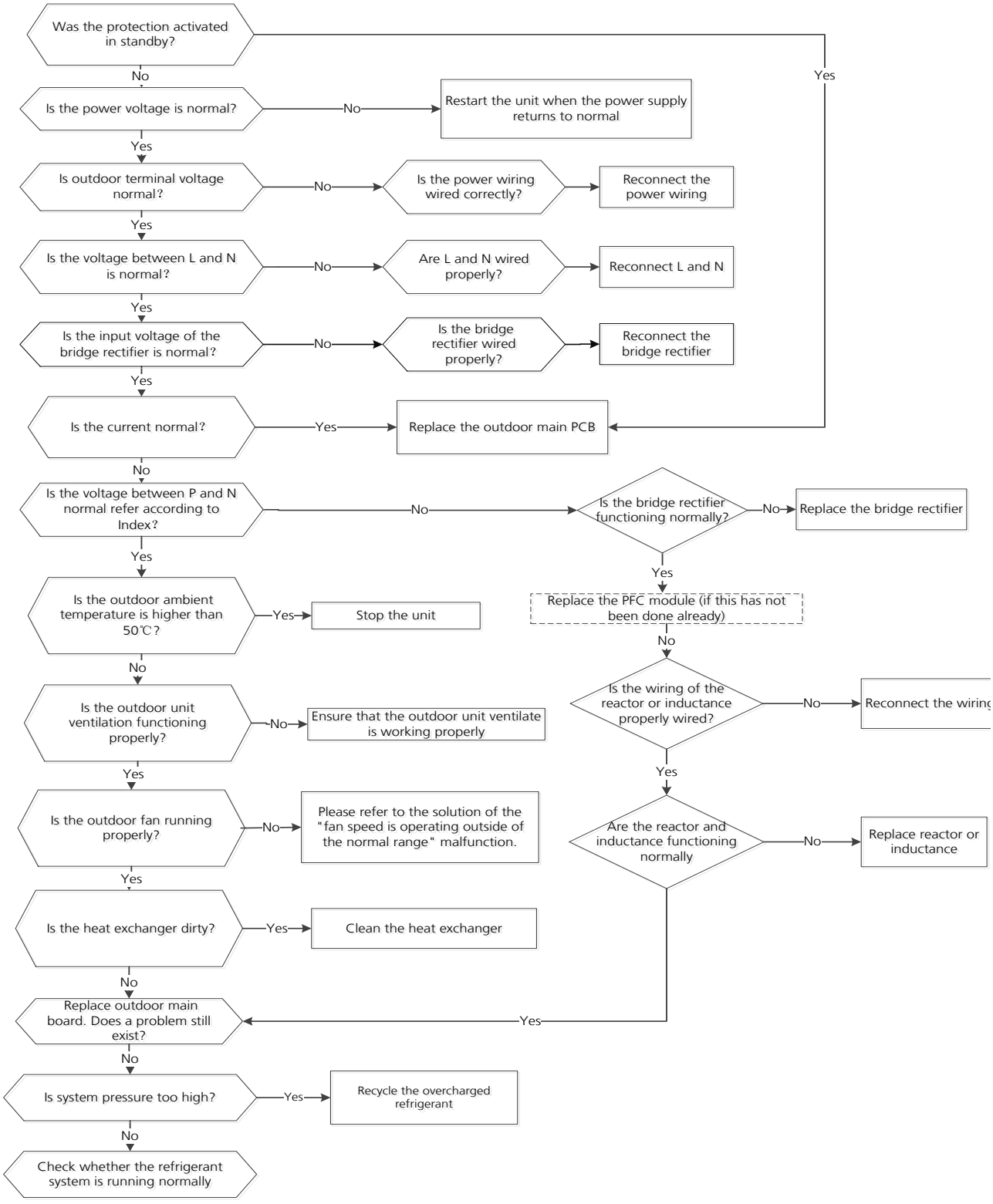

Note: For certain models, outdoor PCB could not be removed separately. In this case, the outdoor electric control box should be replaced as a whole.

7.15 PC 0F(PFC module protection diagnosis and solution)

Description: When the voltage signal that IPM send to compressor drive chip is abnormal, the LED displays the failure code and the AC turns off.

Recommended parts to prepare:

- Connection wires
- Inductance
- Outdoor main PCB
- PFC module

Troubleshooting and repair:

At first test the resistance between every two ports of U, V, W of IPM and P, N. If any result of them is 0 or close to 0, the IPM is defective. Otherwise, please follow the procedure below:

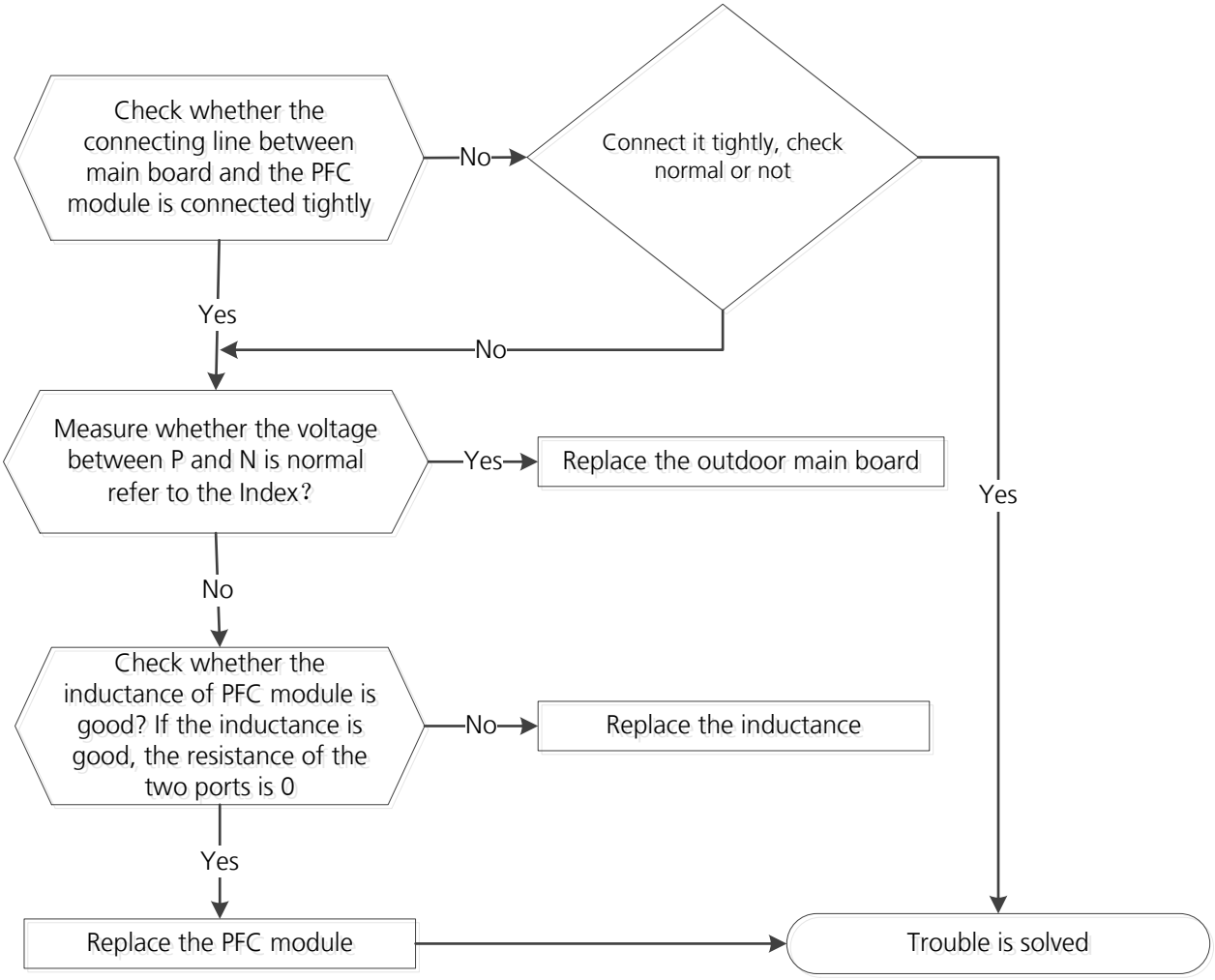

7.16 EC 72 (Lack phase failure of outdoor DC fan motor diagnosis and solution)

Description: When the three-phase sampling current of the DC motor is abnormal, especially when the current of one or more phases is always small and almost 0, the LED displays the failure code.

Recommended parts to prepare:

- Connection wire
- Fan motor
- Outdoor PCB

Troubleshooting and repair:

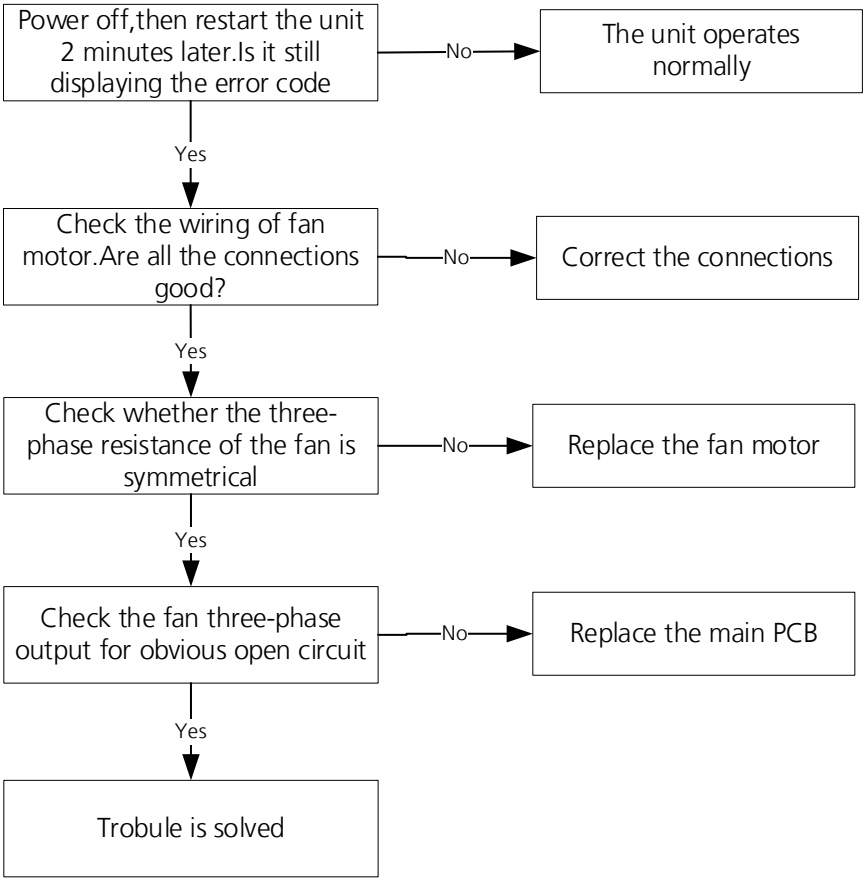

7.17 PC 43 (Outdoor compressor lack phase protection diagnosis and solution)

Description: When the three-phase sampling current of the compressor is abnormal, especially when the current of one or more phases is always small and almost 0, the LED displays the failure code

Recommended parts to prepare:

- Connection wire
- Compressor
- Outdoor PCB

Troubleshooting and repair:

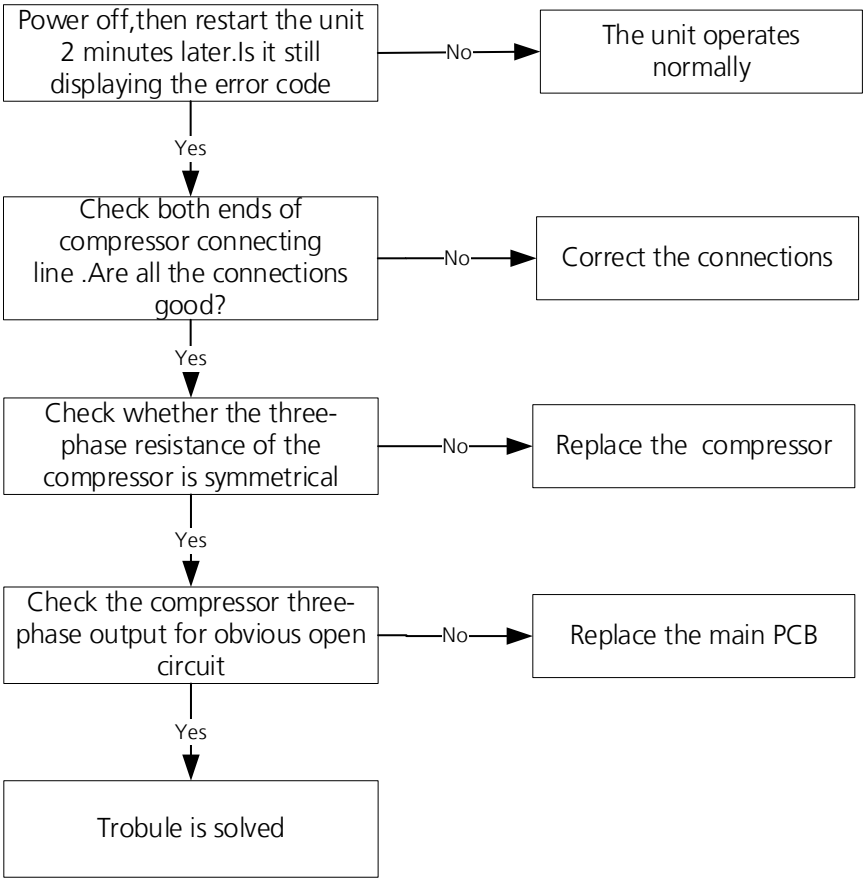

7.18 PC 45 (Outdoor unit IR chip drive failure diagnosis and solution)

Description: When the IR chip detects its own parameter error, the LED displays the failure code when power on.

Recommended parts to prepare:

- Inverter module PCB.

Troubleshooting and repair:

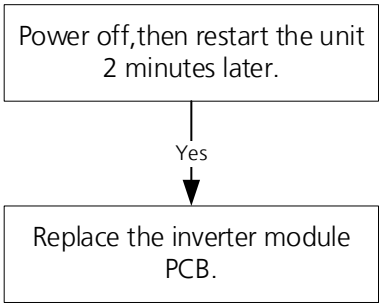

7.19 PC 0L (Low ambient temperature protection)

Description: It is a protection function. When compressor is off, outdoor ambient temperature(T4) is lower than -35°C. for 10s, the AC will stop and display the failure code.

When compressor is on, outdoor ambient temperature(T4) is lower than -40°C.for 10s, the AC will stop and display the failure code.

When outdoor ambient temperature(T4) is no lower than -32°C.for 10s, the unit will exit protection.

7.20 EH 0b(Communication error between indoor two chips diagnosis and solution)

Description: Indoor PCB main chip does not receive feedback from another chip.

Recommended parts to prepare:

- Indoor PCB

Troubleshooting and repair:

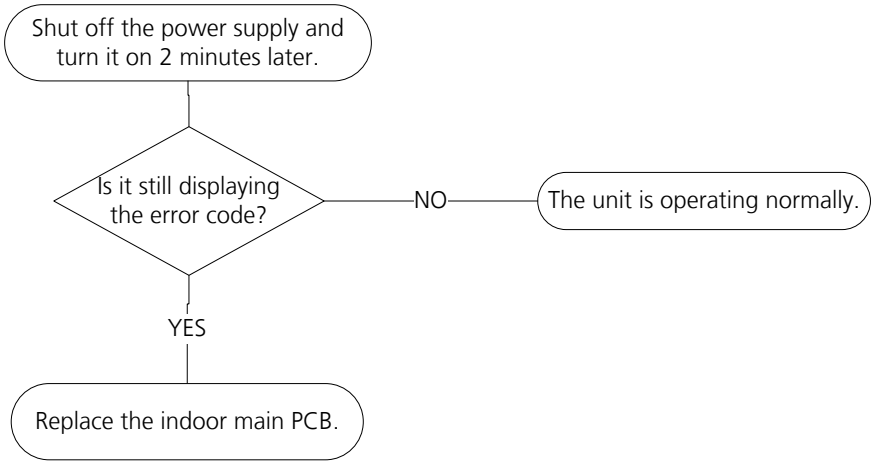

7.21 PC 30 (High pressure protection diagnosis and solution)

Description: Outdoor pressure switch cut off the system because high pressure is higher than 4.4 MPa

Recommended parts to prepare:

- Connection wires
- Pressure switch
- Outdoor fan
- Outdoor main PCB

Troubleshooting and repair:

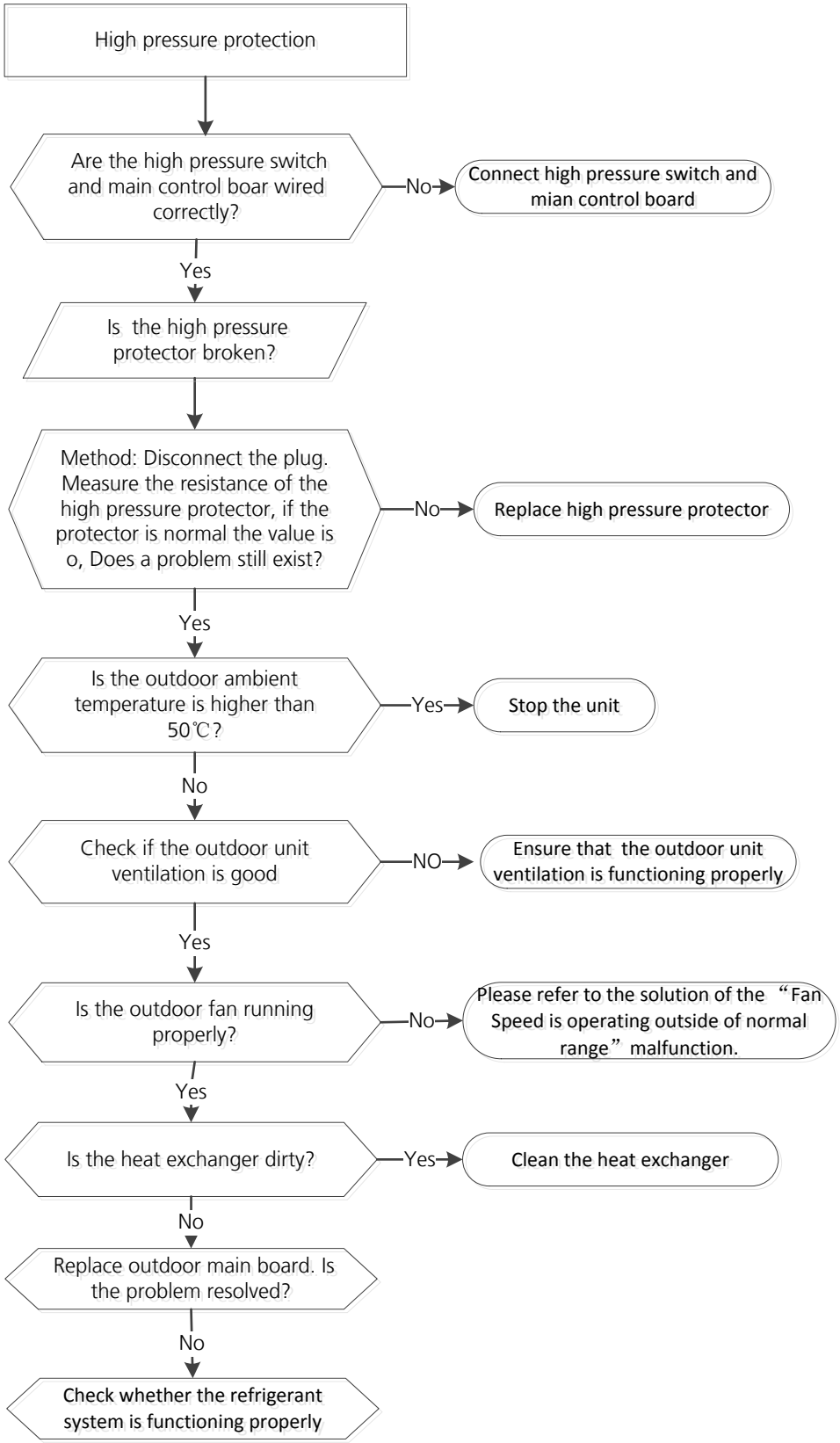
High pressure protection
Are the high pressure switch and main control boar wired correctly?
No
Connect high pressure switch and mian control board
Yes
Is the high pressure protector broken?
Method: Disconnect the plug. Measure the resistance of the high pressure protector, if the protector is normal the value is o, Does a problem still exist?
No
Replace high pressure protector
Yes
Is the outdoor ambient temperature is higher than 50℃?
Yes
Stop the unit
No
Check if the outdoor unit ventilation is good
NO
Ensure that the outdoor unit ventilation is functioning properly
Yes
Is the outdoor fan running properly?
No
Please refer to the solution of the "Fan Speed is operating outside of normal range" malfunction.
Yes
Is the heat exchanger dirty?
Yes
Clean the heat exchanger
No
Replace outdoor main board. Is the problem resolved?
No
Check whether the refrigerant system is functioning properly

7.22 PC 0A (High temperature protection of condenser diagnosis and solution)

Description: When the outdoor pipe temperature is more than 65°C, the unit stops. It starts again only when the outdoor pipe temperature is less than 52°C.

Recommended parts to prepare:

- Connection wires
- Condenser temperature sensor
- Outdoor fan
- Outdoor main PCB
- Refrigerant

Troubleshooting and repair:

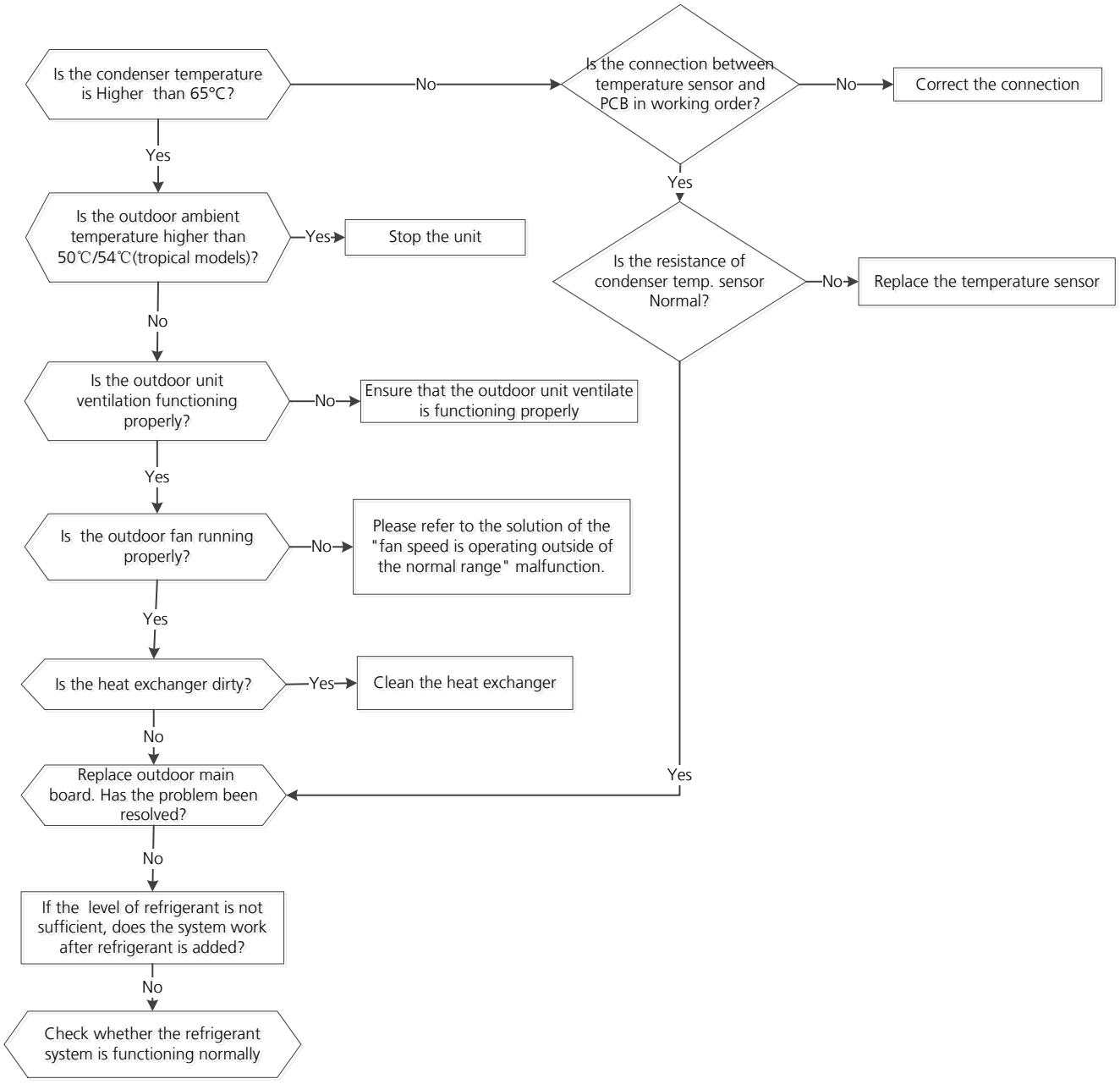

7.23 PC 06 (Discharge temperature protection of compressor diagnosis and solution)

Description: If the compressor discharge temperature exceeds a certain level for nine seconds, the compressor ceases operation, the LED displays the failure code

Recommended parts to prepare:

- Connection wires
- Discharge temperature sensor
- Additional refrigerant
- Outdoor main PCB

Troubleshooting and repair:

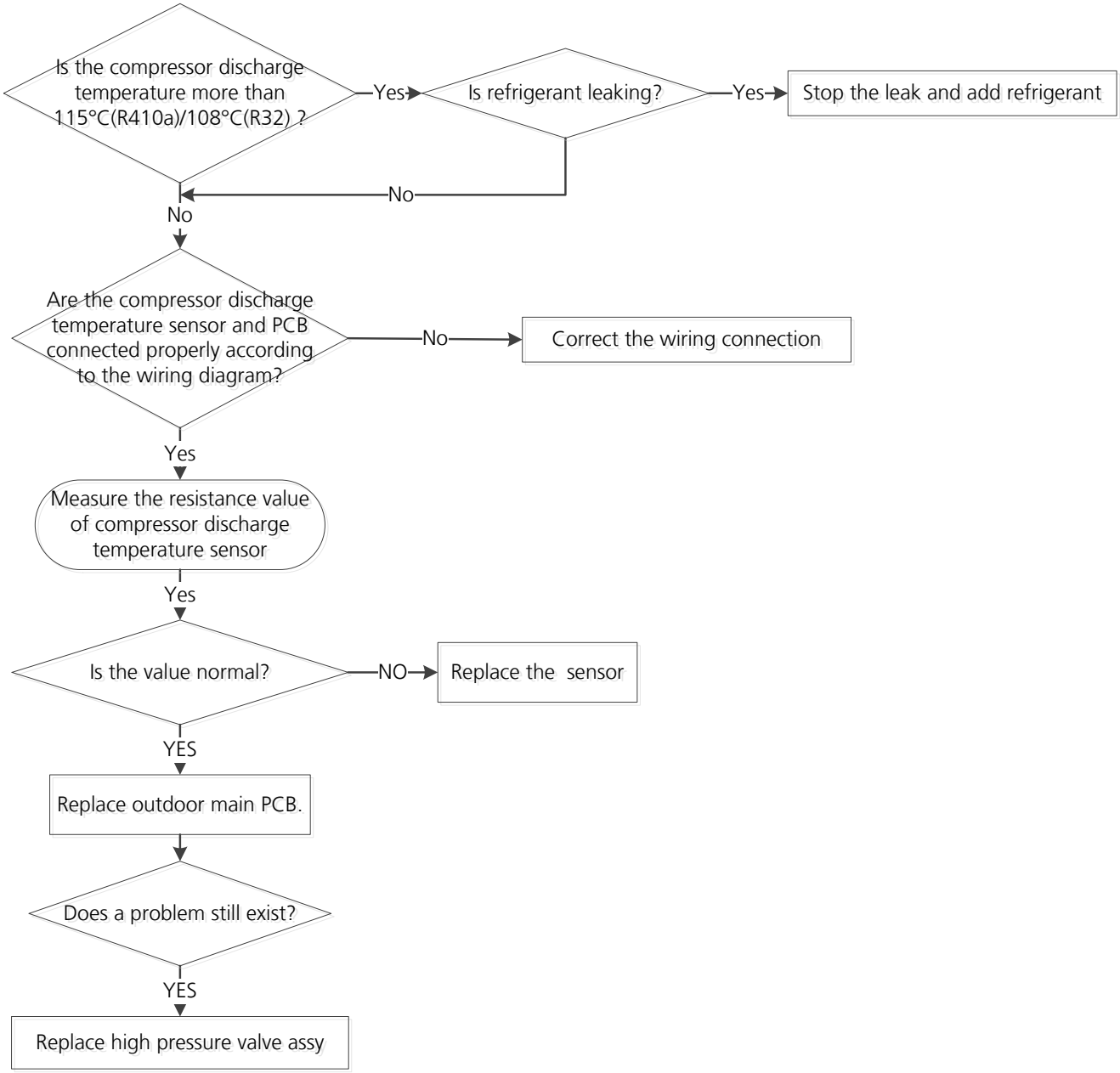

Note: For certain models, outdoor unit uses combination sensor, T3,T4 and TP are the same of sensor. This picture and the value are only for reference, actual appearance and value may vary.

8. Check Procedures

8.1 Temperature Sensor Check

WARNING

Be sure to turn off all power supplies or disconnect all wires to avoid electric shock. Operate after compressor and coil have returned to normal temperature in case of injury.

1. Disconnect the temperature sensor from PCB (Refer to Chapter 5&6. Indoor&Outdoor Unit Disassembly).
2. Measure the resistance value of the sensor using a multi-meter.
3. Check corresponding temperature sensor resistance value table (Refer to Chapter 8. Appendix).

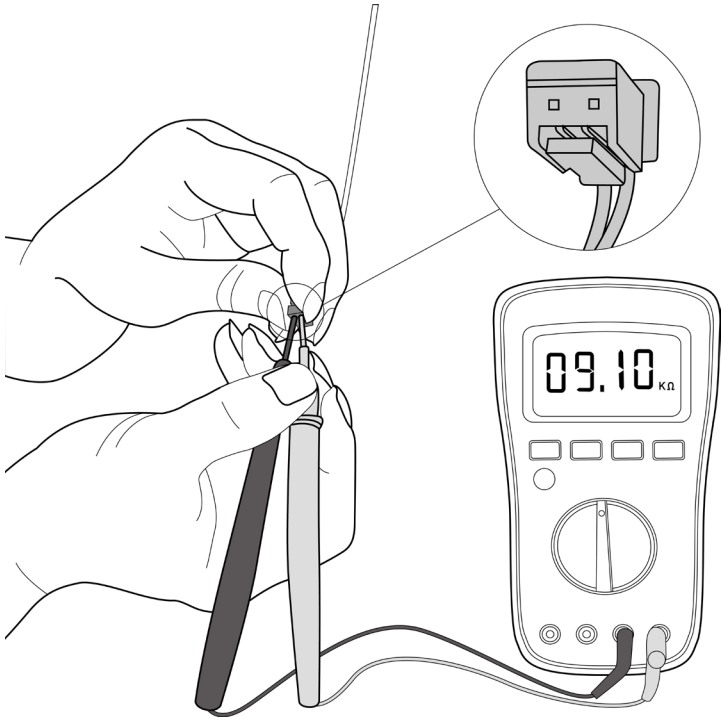

Note: The picture and the value are only for reference, actual condition and specific value may vary.

8.2 Compressor Check

1. Disconnect the compressor power cord from outdoor PCB (Refer to Chapter 6. Outdoor Unit Disassembly)).
2. Measure the resistance value of each winding using a multi-meter.
3. Check the resistance value of each winding in the following table.

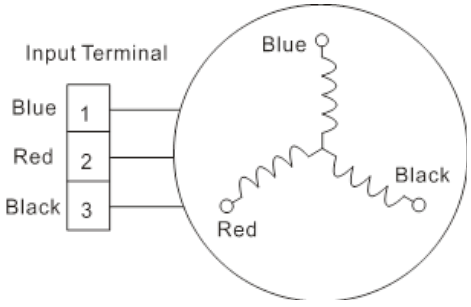

Resistance Value	KSN98D64UFZ3	KSN140D21UFZ	KTM240D43UKT	KTM240D57UMT
Blue-Red	2.7Ω	1.28Ω	1.03Ω	0.62Ω
Blue-Black				
Red-Black				

Resistance Value	KTF250D22UMT	KTF310D43UMT	KTQ420D1UMU
Blue-Red	0.75Ω	0.65Ω	0.37Ω
Blue-Black			
Red-Black			

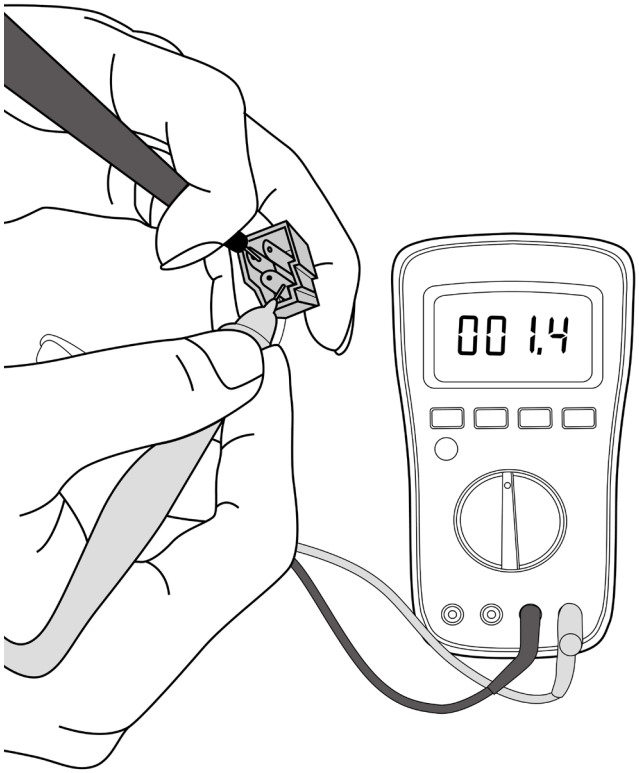

Note: The picture and the value are only for reference, actual condition and specific value may vary.

8.3 IPM Continuity Check

WARNING

Electricity remains in capacitors even when the power supply is off.
Ensure the capacitors are fully discharged before troubleshooting.

1. Turn off outdoor unit and disconnect power supply.
2. Discharge electrolytic capacitors and ensure all energy-storage unit has been discharged.
3. Disassemble outdoor PCB or disassemble IPM board.
4. Measure the resistance value between P and U(V, W, N); U(V, W) and N.

Digital tester		Resistance value	Digital tester		Resistance value
(+)Red	(-)Black	∞ (Several MΩ)	(+)Red	(-)Black	∞ (Several MΩ)
P	N		U	N	
	U		V		
	V		W		
	W		-		

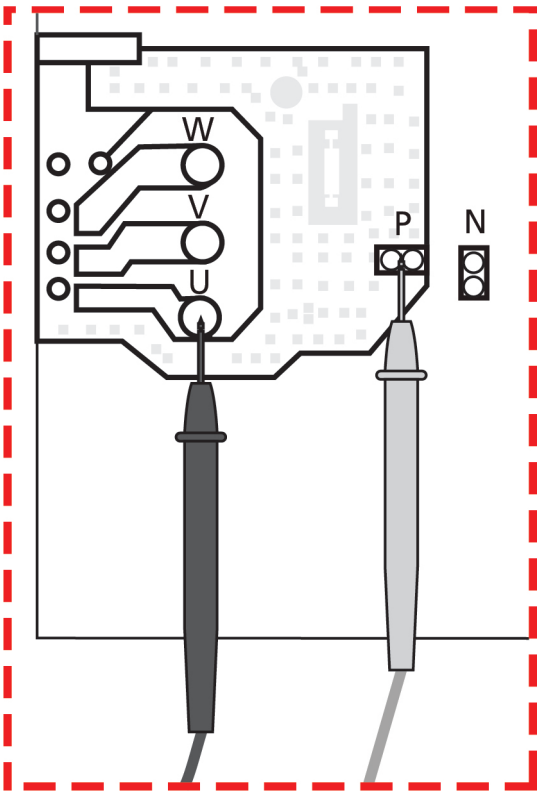

Note: The picture and the value are only for reference, actual condition and specific value may vary.

Indoor Unit Disassembly-Console

Contents

1. Indoor Unit Disassembly 1

1.1 Filter 2

1.2 Electrical Parts 3

1.3 Water Collector 7

1.4 Louver Motor of Water Collector 8

1.5 Louver Motor of Air Outlet Subassembly 9

1.6 Evaporator 11

1.7 Fan Motor and Fan 12

1. Indoor Unit Disassembly

1.1 Filter

Procedure	Illustration
1) Slide the two stoppers located on the left and right sides. (see CJ_ CONSOLE_001)	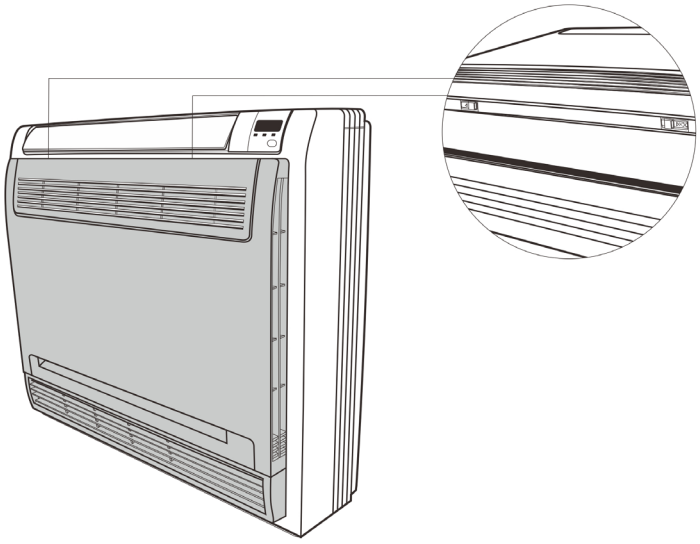 CJ_CONSOLE_001
2) Open the front panel. (see CJ_ CONSOLE_002) 3) Pull out the filter (see CJ_AHU_002)	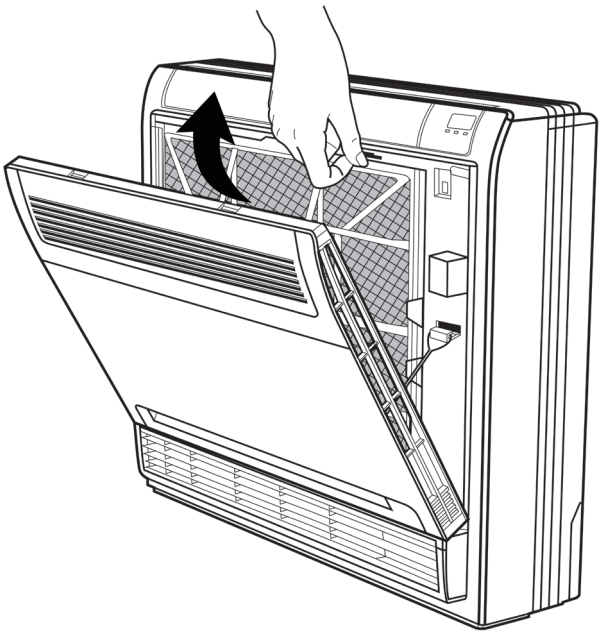 CJ_CONSOLE_002

1.2 Electrical Parts (Antistatic gloves must be worn.)

Note: Remove the front panel (refer to 11. filter) before disassembling electrical parts.

Procedure	Illustration
1) Remove the string. 2) Remove the front panel. (see CJ_CONSOLE_003)	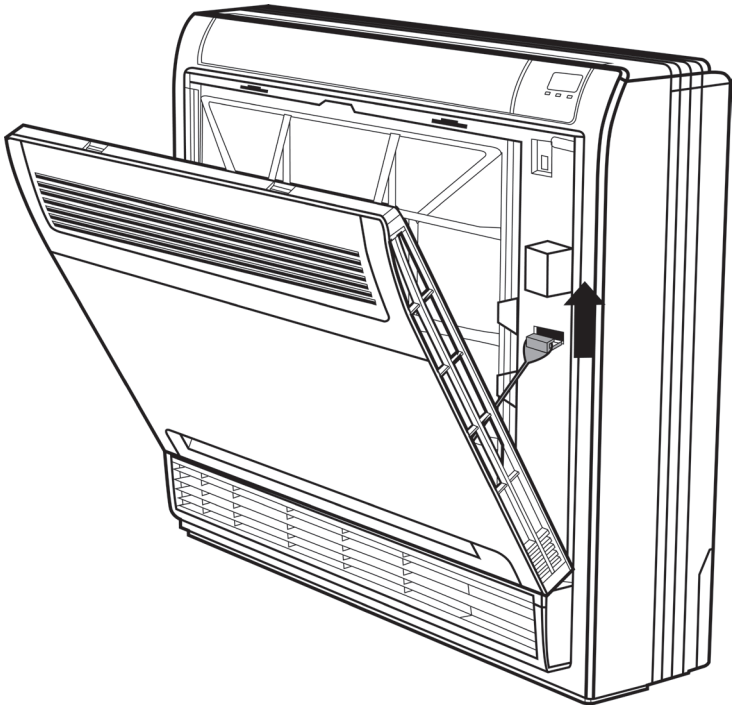 **CJ_CONSOLE_003**
3) Remove 4 screws. (see CJ_CONSOLE_004) 4) Remove the panel frame assembly (see CJ_AHU_004)	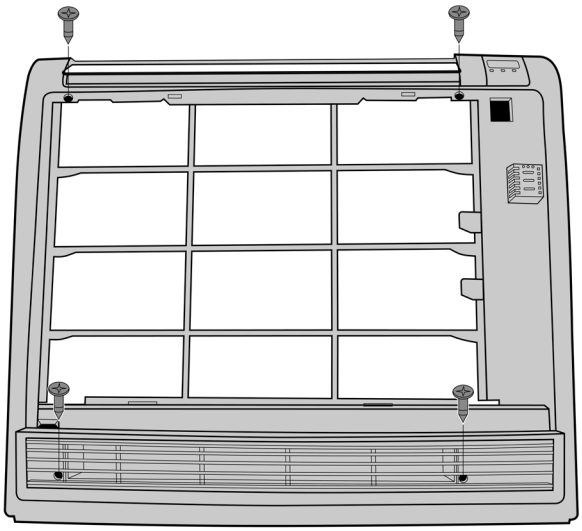 **CJ_CONSOLE_004**

Note: This section is for reference only. Actual unit appearance may vary.

Procedure	Illustration
5) Remove 3 screws(one of screws is fixing electric control box, two of screws are fixing grounding wire.). (see CJ_CONSOLE_005)	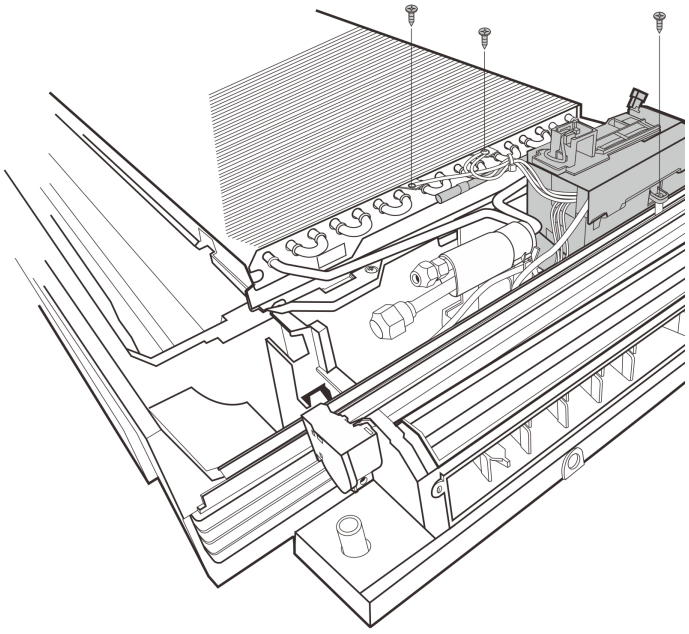 CJ_CONSOLE_005
6) Disconnect the connect of fan between main control board. (see CJ_CONSOLE_006)	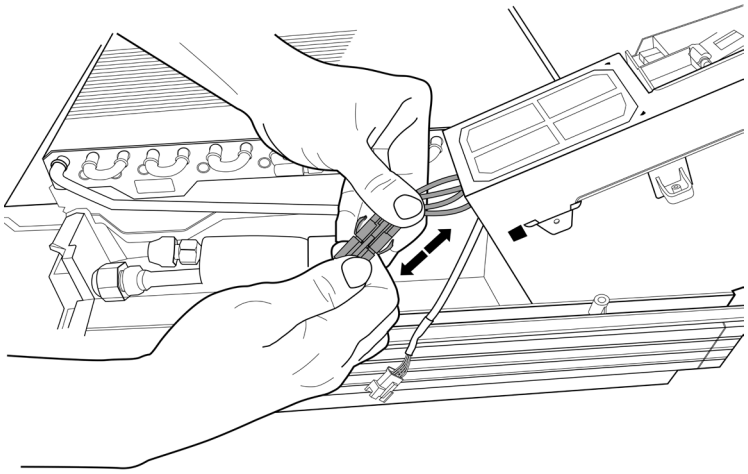 CJ_CONSOLE_006

Note: This section is for reference only. Actual unit appearance may vary.

Procedure	Illustration
5) Remove the supporter. (see CJ_CONSOLE_007)	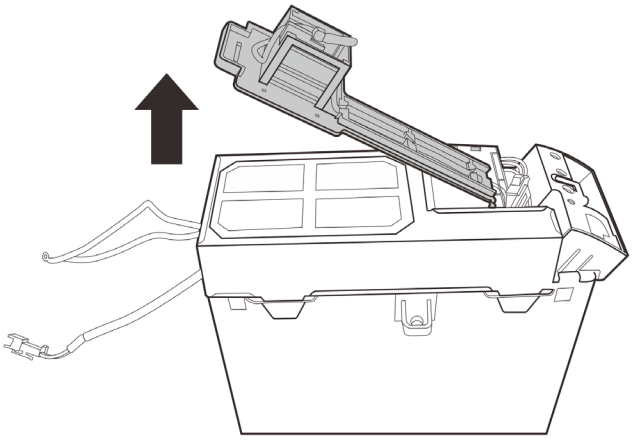 CJ_CONSOLE_007
6) Remove the fixing board. (see CJ_CONSOLE_008)	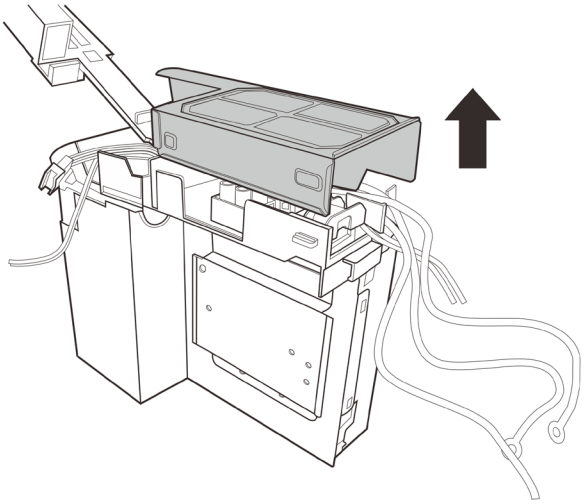 CJ_CONSOLE_008

Note: This section is for reference only. Actual unit appearance may vary.

Procedure	Illustration
5) Remove the seal plate. (see CJ_ CONSOLE_009)	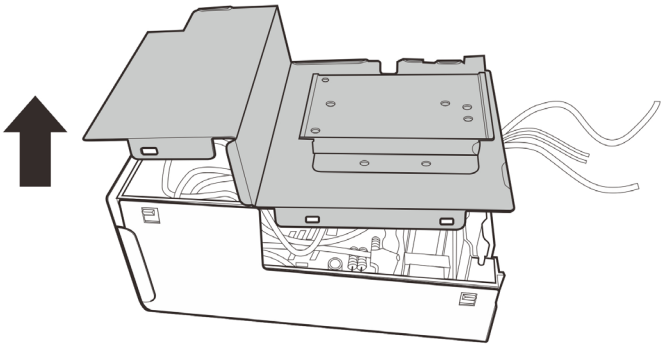 CJ_CONSOLE_009
6) Remove two screws and disconnect all wires and connectors to remove the main control board.(see CJ_ CONSOLE_010)	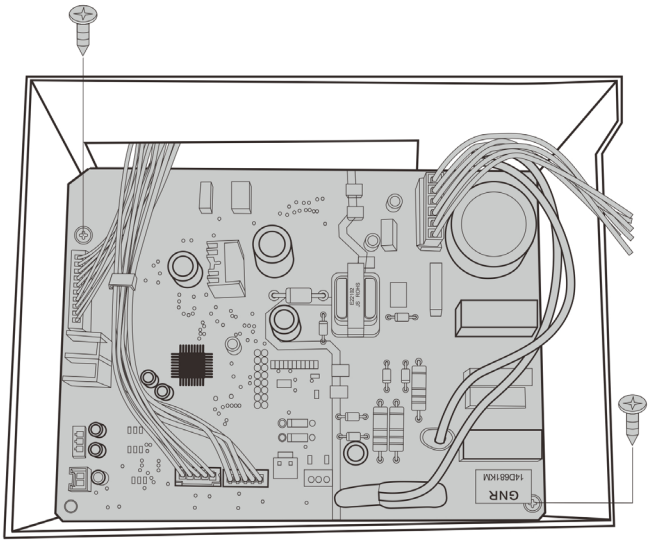 CJ_CONSOLE_010

Note: This section is for reference only. Actual unit appearance may vary.

1.3 Water Collector

Note: Remove the front panel and panel frame (refer to 1.1 filter and 1.2. electrical parts) before disassembling water collector.

Procedure	Illustration
1) Remove 2 screws. (see CJ_CONSOLE_011)	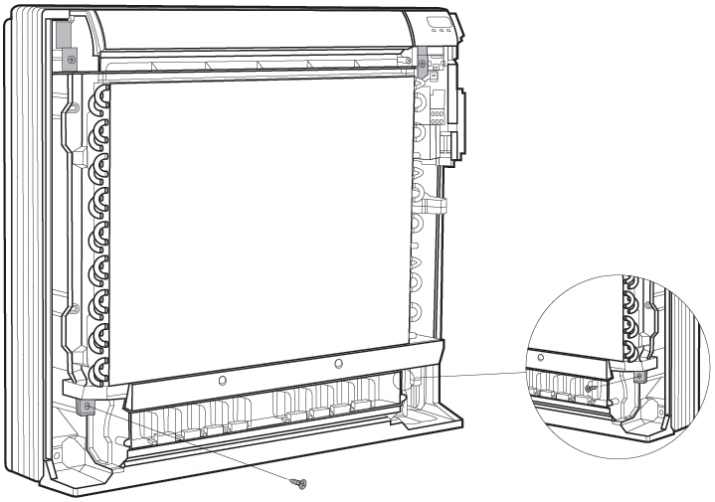 CJ_CONSOLE_011
2) Take out the water collector subassembly. (see CJ_CONSOLE_012)	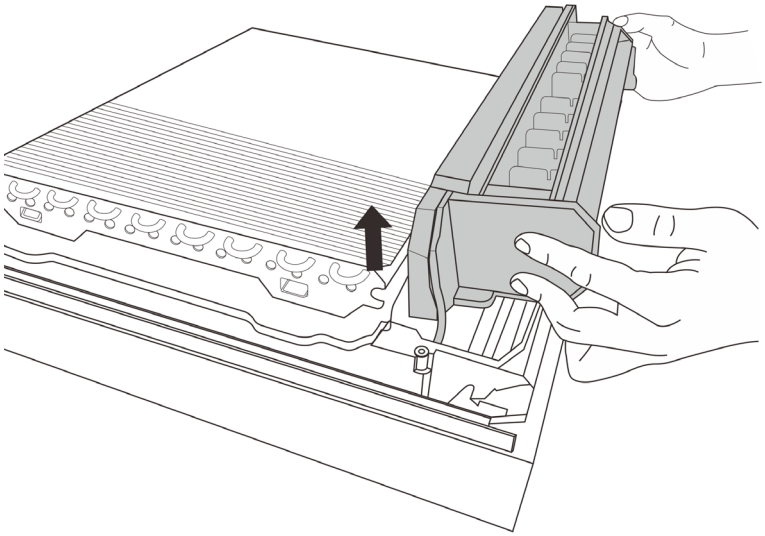 CJ_CONSOLE_012

Note: This section is for reference only. Actual unit appearance may vary.

1.4 Louver Motor of Water Collector

Note: Remove the front panel and panel frame (refer to 1.1 filter and 1.2 electrical parts) before disassembling louver motor of water collector.

Procedure	Illustration
1) Remove the cover of louver motor. (see CJ_CONSOLE_013) 2) Remove 2 screws. (see CJ_CONSOLE_013) 3) Remove the louver motor.	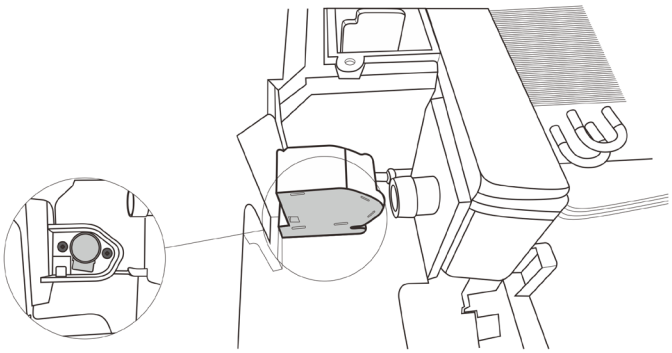 **CJ_CONSOLE_013**

Note: This section is for reference only. Actual unit appearance may vary.

1.5 Louver Motor of Air Outlet Subassembly

Note: Remove the front panel and panel frame (refer to 1.1 filter and 1.2 electrical parts) before disassembling louver motor of air outlet subassembly.

Procedure	Illustration
1) Remove 2 screws. (see CJ_CONSOLE_014)	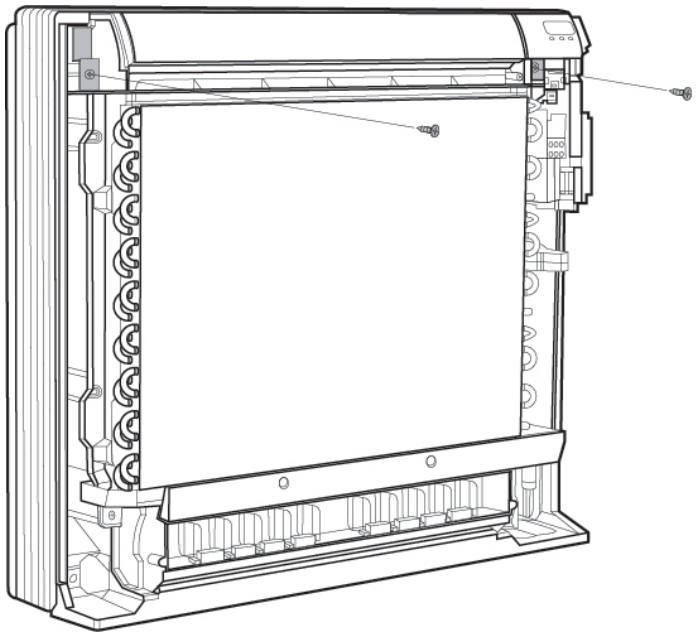 CJ_CONSOLE_014
2) Remove air outlet subassembly. (see CJ_CONSOLE_015)	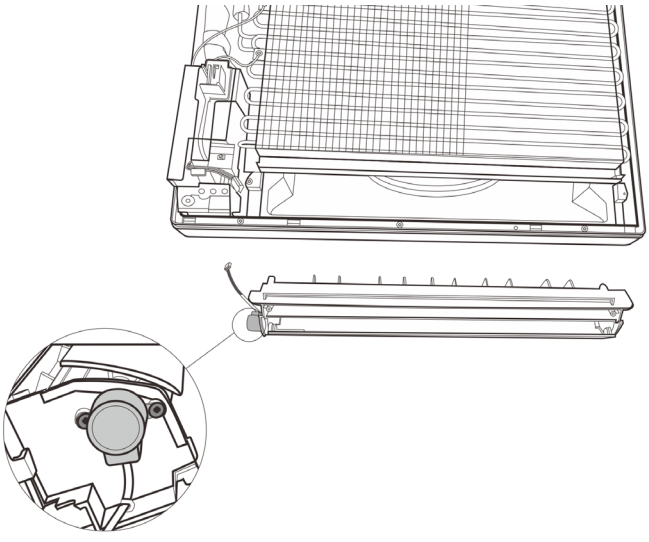 CJ_CONSOLE_015

Note: This section is for reference only. Actual unit appearance may vary.

Procedure	Illustration
3) Remove 2 screws of motor. (see CJ_ CONSOLE_016) 4) Remove the motor.(see CJ_ CONSOLE_016)	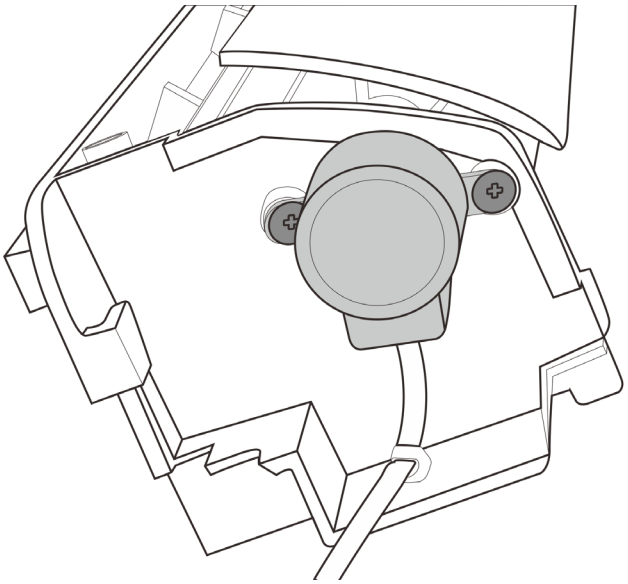 **CJ_CONSOLE_016**

Note: This section is for reference only. Actual unit appearance may vary.

1.6 Evaporator

Note: Remove the front panel, electrical parts and air outlet subassembly (refer to 1.1 filter, 1.2 electrical parts and 1.5 air outlet subassembly) before disassembling louver motor of air outlet subassembly.

Procedure	Illustration
1) Release pipe strap. (see CJ_CONSOLE_017) 2) Release 4 hooks(two on the right side and two on the left side). (see CJ_CONSOLE_017 & 018)	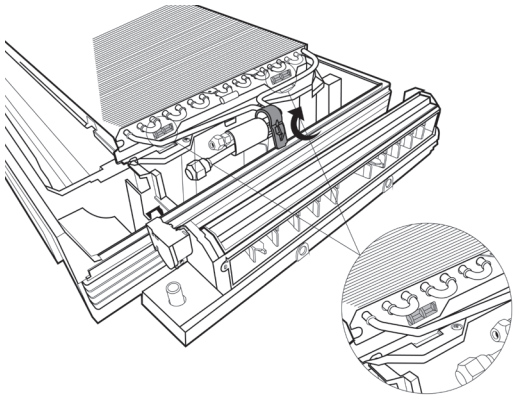 **CJ_CONSOLE_017**
3) Take out evaporator subassembly. (see CJ_CONSOLE_018)	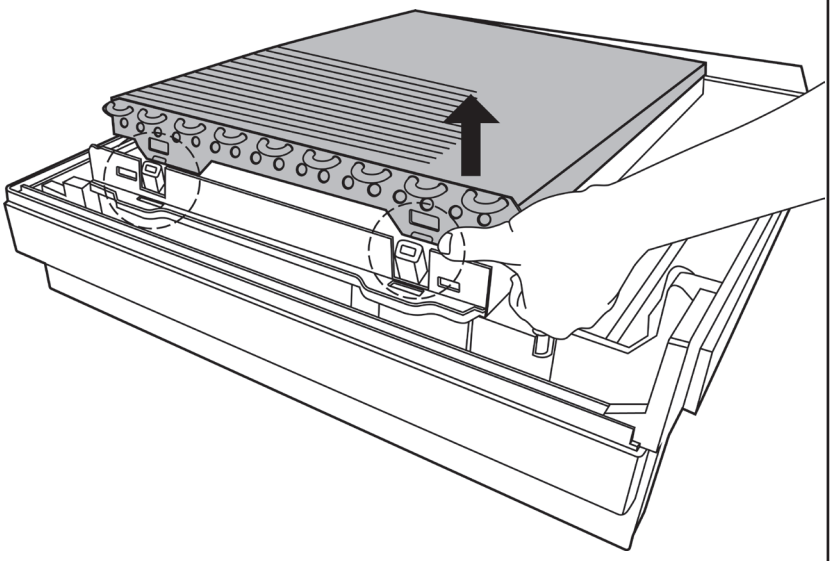 **CJ_CONSOLE_018**

Note: This section is for reference only. Actual unit appearance may vary.

1.7 Fan and Fan Motor

Note: Remove the evaporator subassembly (refer to 1.1, 1.2, 1.5 and 1.6) before disassembling fan.

Procedure	Illustration
1) Remove 4 screws of ventilation subassembly. (see CJ_CONSOLE_019)	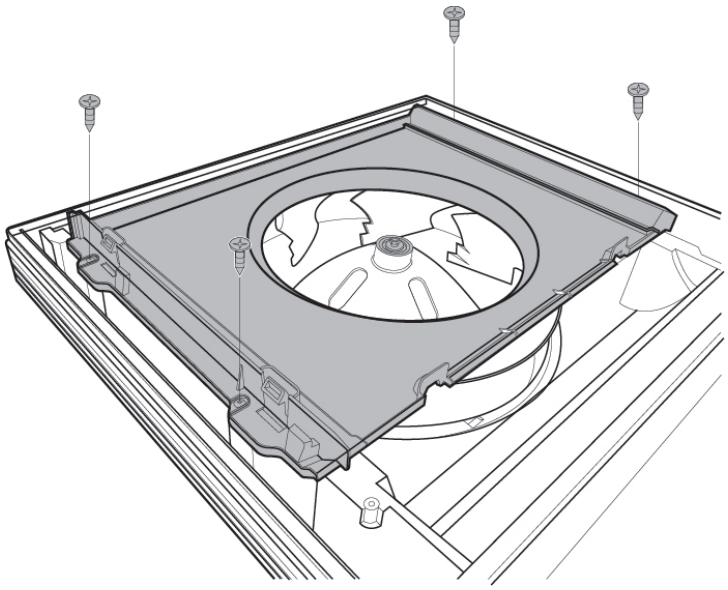 **CJ_CONSOLE_019**
2) Remove the fixing nut of the fan and then pull up the fan. (see CJ_CONSOLE_020)	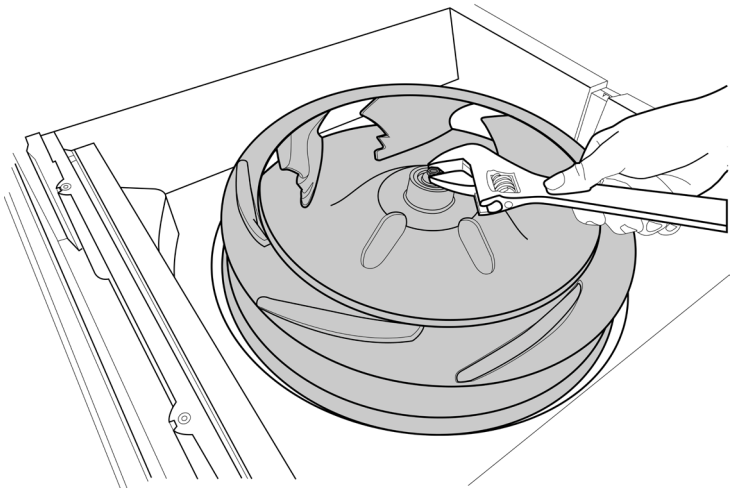 **CJ_CONSOLE_020**

Note: This section is for reference only. Actual unit appearance may vary.

Procedure	Illustration
3) Remove 4 fixing nuts of fan motor.. (see CJ_CONSOLE_021)	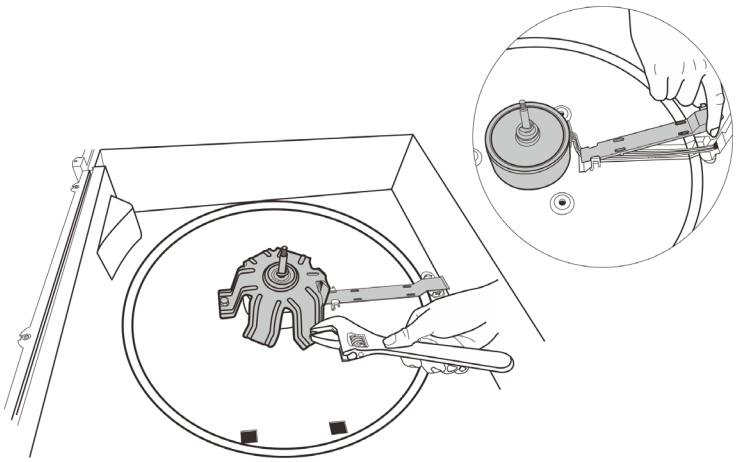 CJ_CONSOLE_021

Note: This section is for reference only. Actual unit appearance may vary.

Indoor Unit Disassembly-Compact Cassette

Contents

1. Indoor Unit Disassembly 1

1.1 Front Panel and Display Board 2

1.2 Electrical Parts 5

1.3 Fan Motor and Fan 7

1.4 Water Pump 9

1.5 Evaporator 11

1. Indoor Unit Disassembly

1.1 Front Panel and Display Board

Procedure	Illustration
1) Release 2 hooks and open the panel. (see CJ_MCA_001)	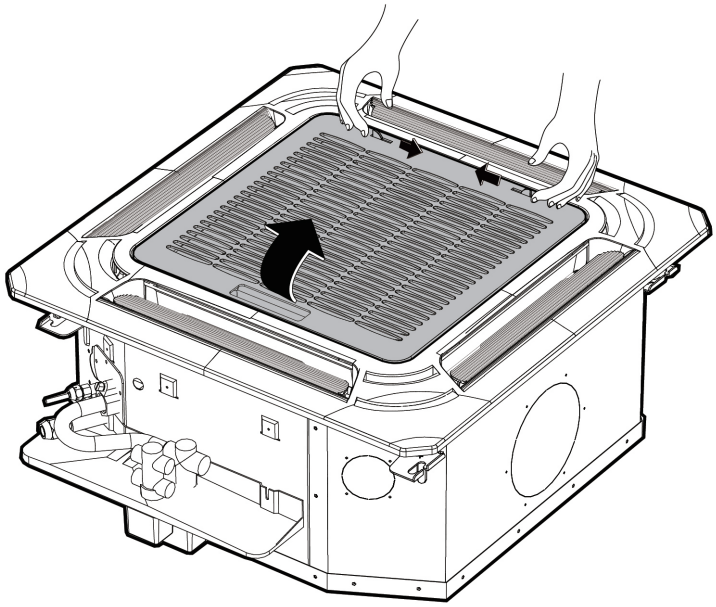 CJ_MCA_001
2) Remove two screws of wire line. (see CJ_MCA_002)	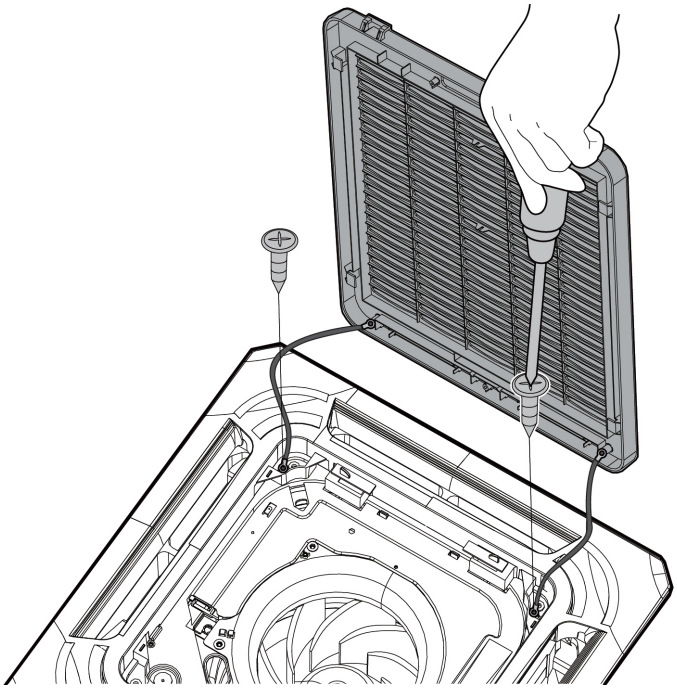 CJ_MCA_002

Note: This section is for reference only. Actual unit appearance may vary.

Procedure	Illustration
3) Release the hook then pull up the filter(see CJ_MCA_003)	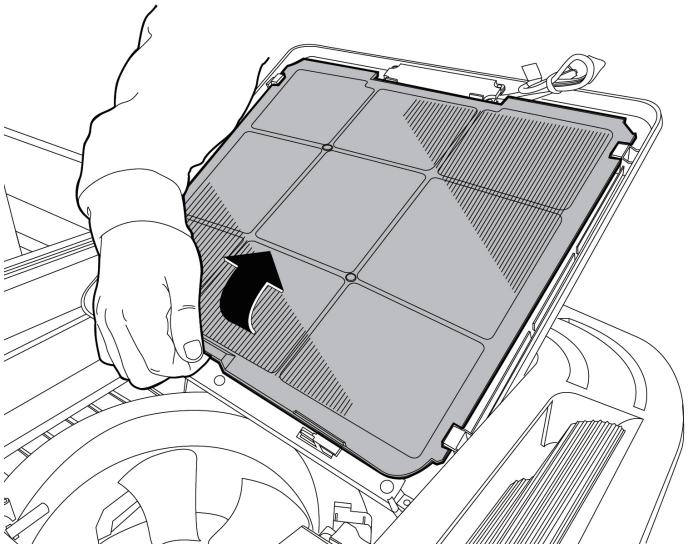 CJ_MCA_003
4) Remove 4 screws of cover and remove the display board(see CJ_MCA_004)	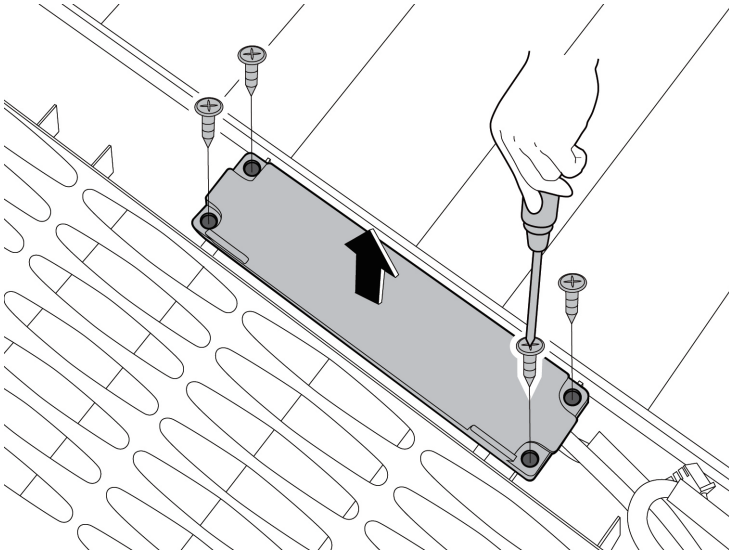 CJ_MCA_004

Note: This section is for reference only. Actual unit appearance may vary.

Procedure	Illustration
5) Remove 2 screws of display board and remove PCB.(see CJ_MCA_005)	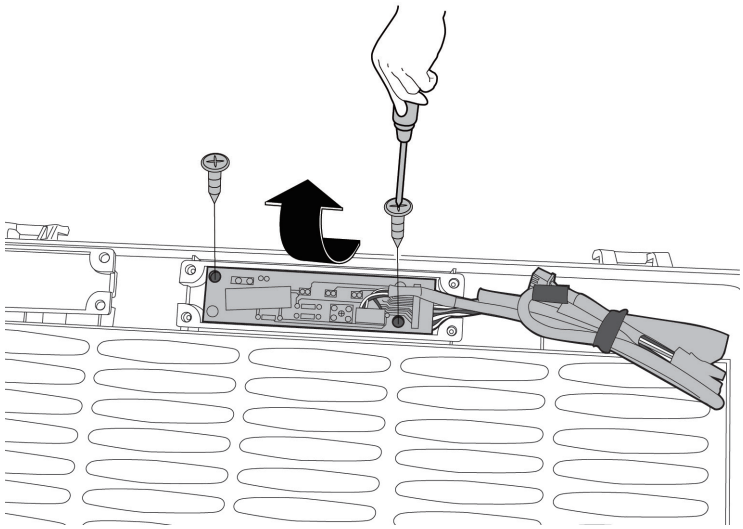 CJ_MCA_005

Note: This section is for reference only. Actual unit appearance may vary.

1.2 Electrical Parts(Antistatic gloves must be worn.)

Note: Remove the front panel (refer to 1.1 Front Panel and display) before disassembling electrical parts.

Procedure	Illustration
1) Remove 4 screws of the panel and pull up the panel. (see CJ_MCA_006)	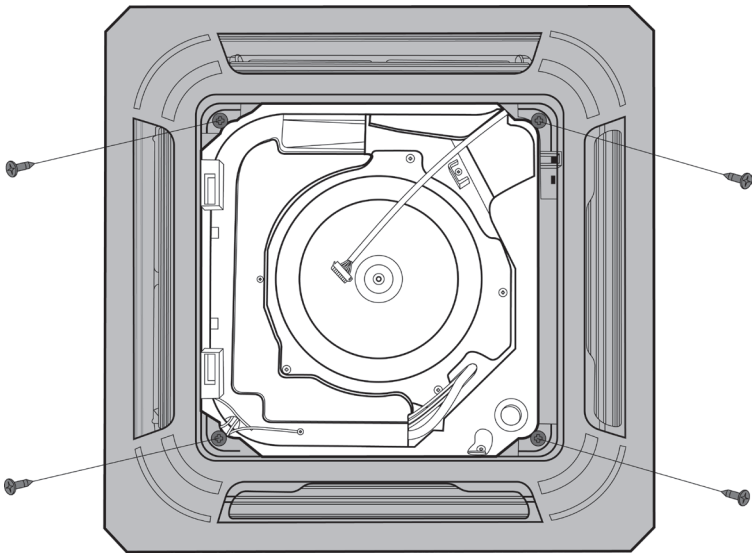 CJ_MCA_006
2) Remove 3 screws of electrical cover. (see CJ_MCA_007)	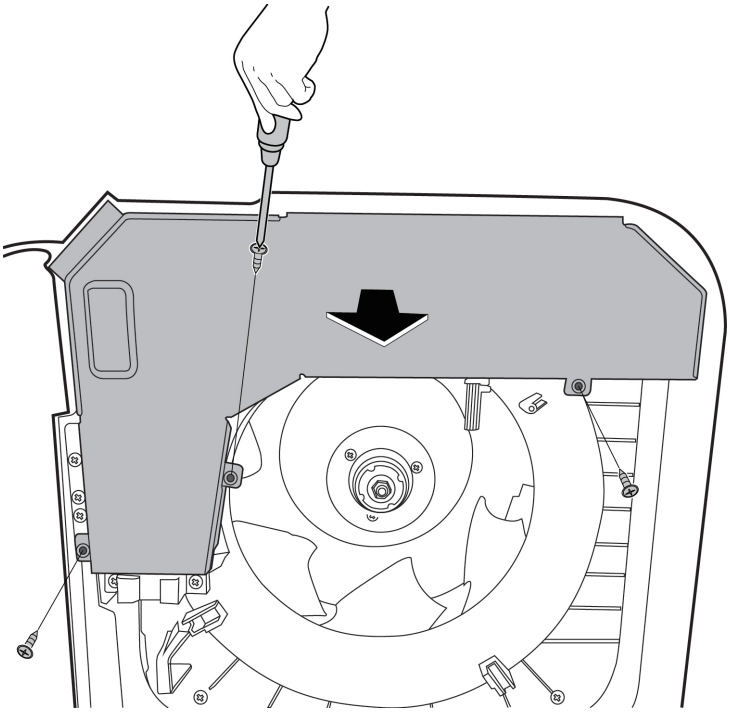 CJ_MCA_007

Note: This section is for reference only. Actual unit appearance may vary.

Procedure	Illustration
3) Disconnect the connectors of PCB. (see CJ_MCA_008)	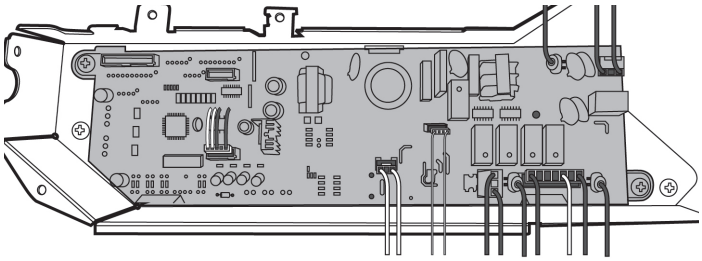 CJ_MCA_008
4) Remove 2 screws of main control board and remove PCB.(see CJ_ MCA_009)	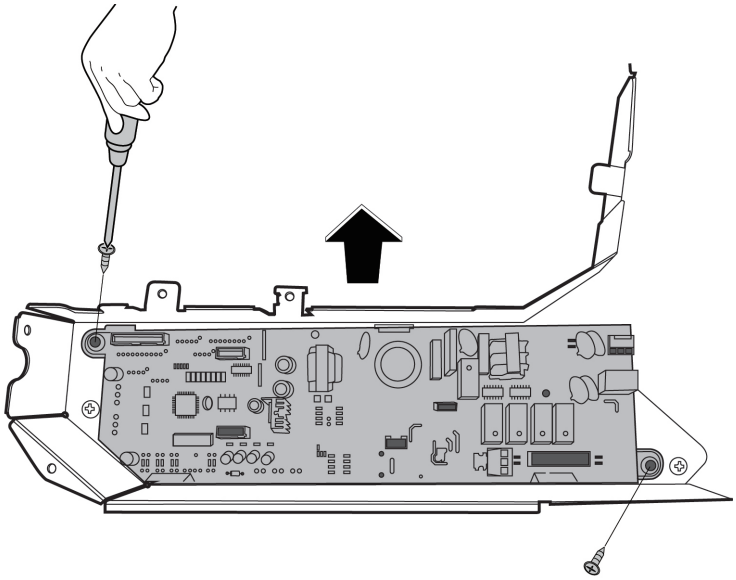 CJ_MCA_009
5) Remove 2 screws of electronic control box and remove electronic control box.(see CJ_MCA_010)	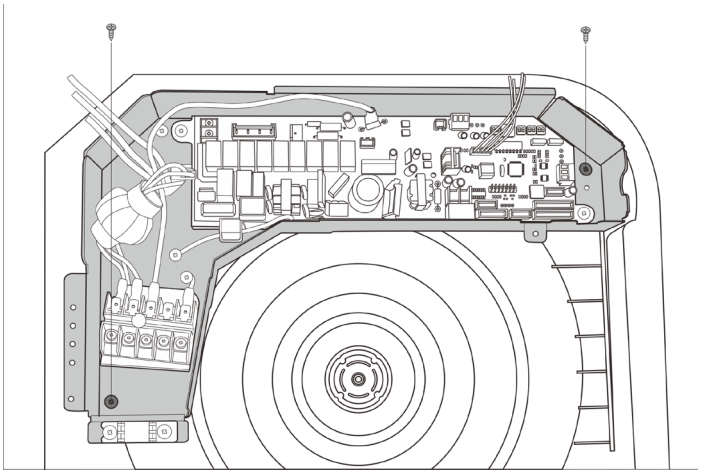 CJ_MCA_010

Note: This section is for reference only. Actual unit appearance may vary.

1.3 Fan motor and fan

Note: Remove the front panel and electrical parts (refer to 1.1 &1.2) before disassembling fan motor.

Procedure	Illustration
1) Remove 4 screws of water collector then remove it.(see CJ_MCA_011)	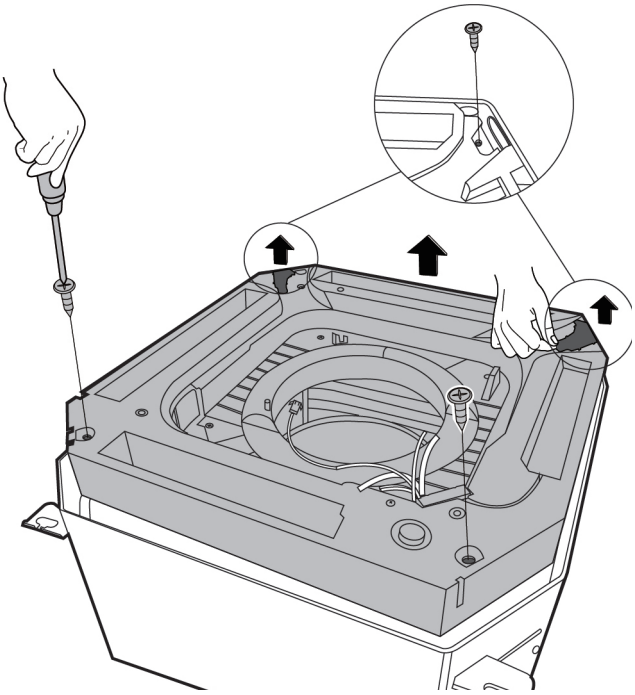 CJ_MCA_011
2) Remove the nut of the fan and then pull up the fan.(see CJ_MCA_012)	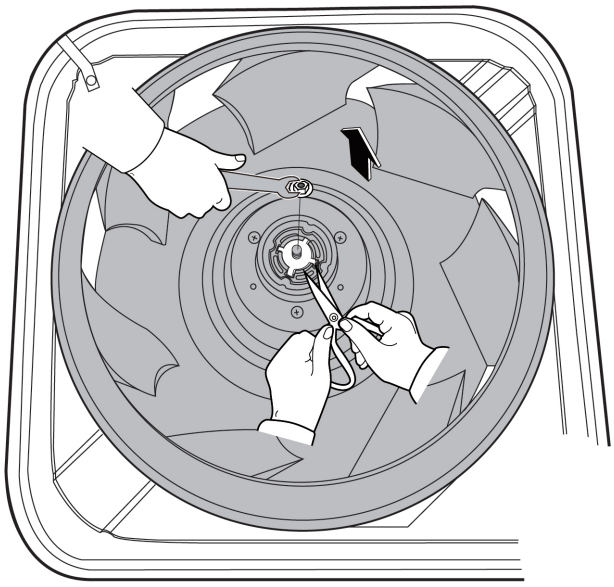 CJ_MCA_012

Note: This section is for reference only. Actual unit appearance may vary.

Procedure	Illustration
3) Remove the nuts and remove the fan motor(see CJ_MCA_013)	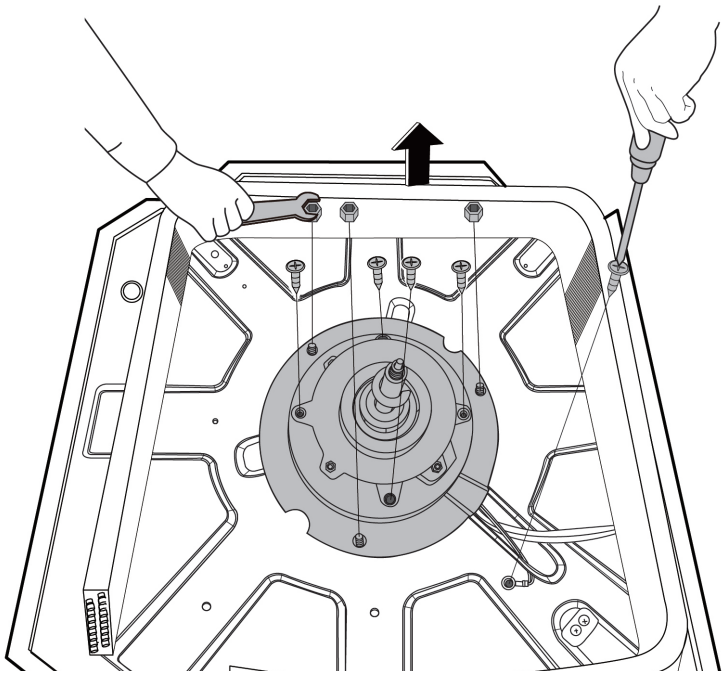 CJ_MCA_013

Note: This section is for reference only. Actual unit appearance may vary.

1.4 Water Pump

Note: Remove the front panel, electrical parts and water collector (refer to 1.1,1.2 &1.3) before disassembling water pump.

Procedure	Illustration
1) Take off the fasten belt of the water pump. (see CJ_MCA_014)	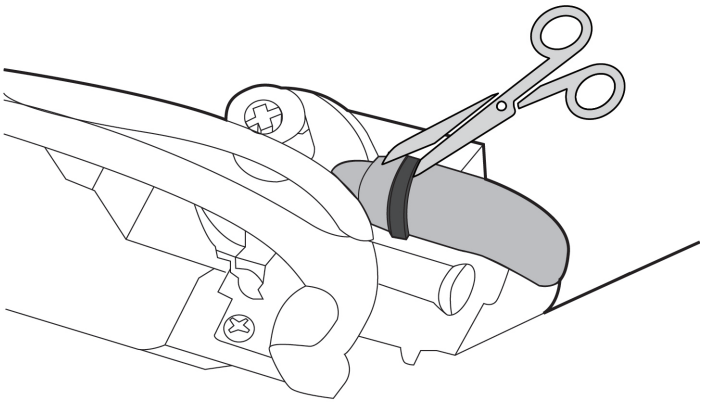 CJ_MCA_014
2) Pinch the metal wire in the direction shown in the figure to release it. (see CJ_MCA_015)	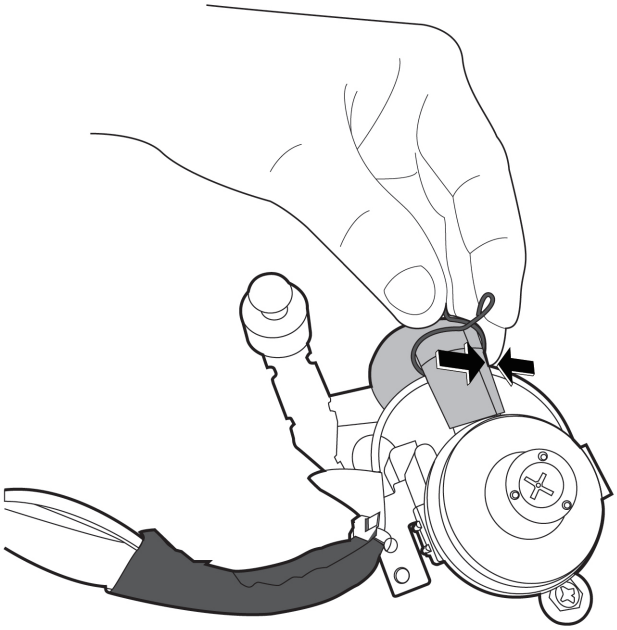 CJ_MCA_015

Note: This section is for reference only. Actual unit appearance may vary.

Procedure	Illustration
3) Remove 3 screws and then remove the water pump. (see CJ_MCA_016)	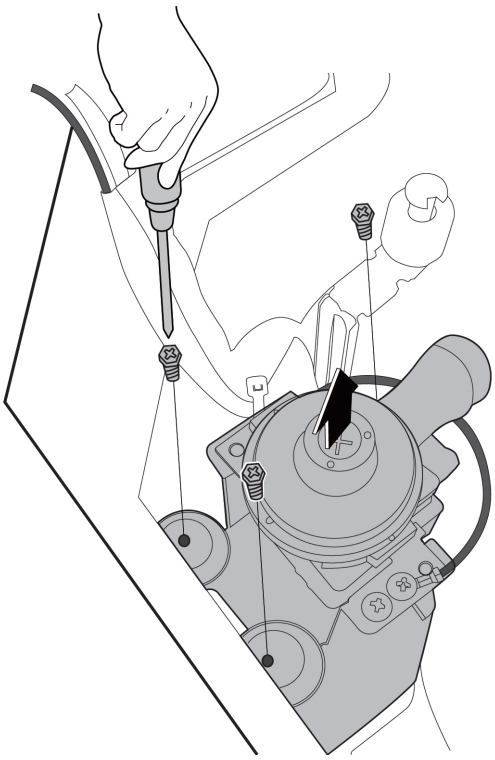 CJ_MCA_016

Note: This section is for reference only. Actual unit appearance may vary.

1.5 Evaporator

Note: Remove the front panel, electrical parts and fan(refer to 1.1,1.2 &1.3) before disassembling evaporator.

Procedure	Illustration
1) Remove 3 screws of pipe clamp board assembly then remove it.(see CJ_MCA_017)	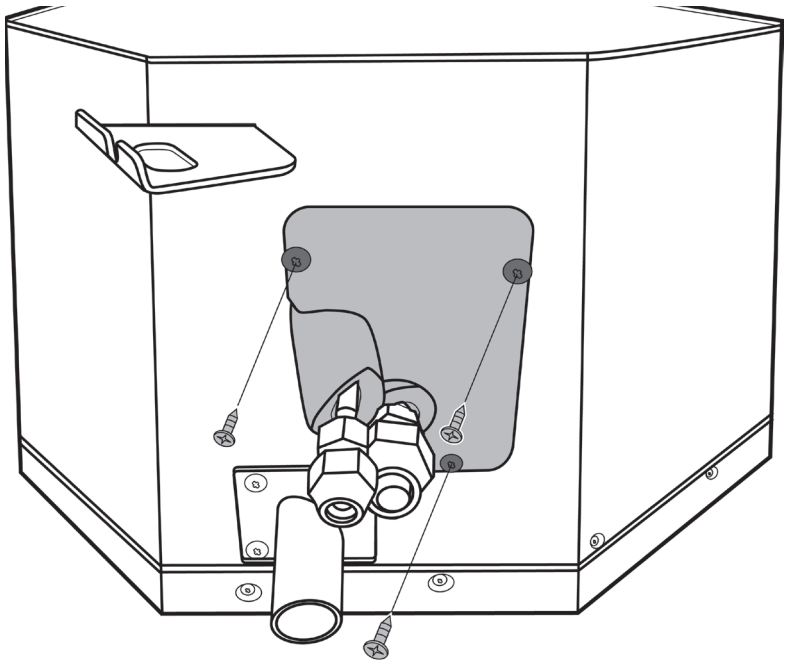 CJ_MCA_017
2) Remove 4 screws of evaporator fixing board then remove it.(see CJ_MCA_018)	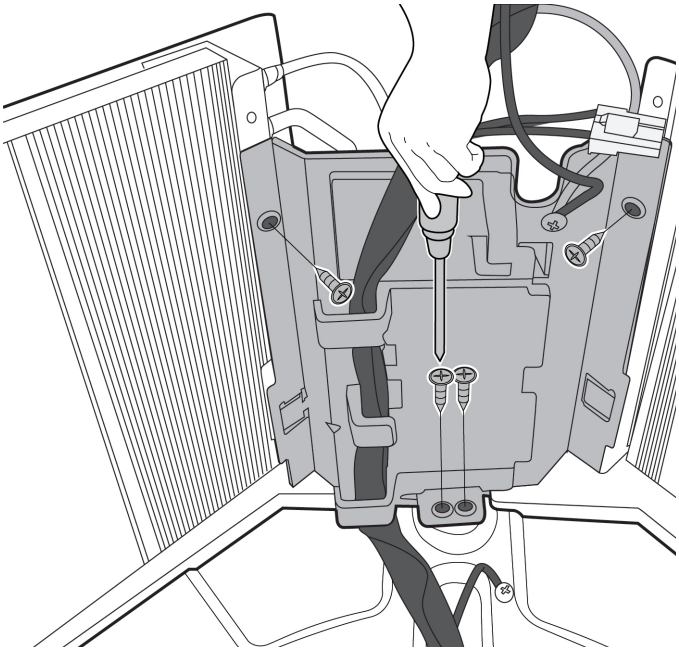 CJ_MCA_018

Note: This section is for reference only. Actual unit appearance may vary.

Procedure	Illustration
3) Remove 1 screw of evaporator fixing hook and remove it. (see CJ_MCA_019)	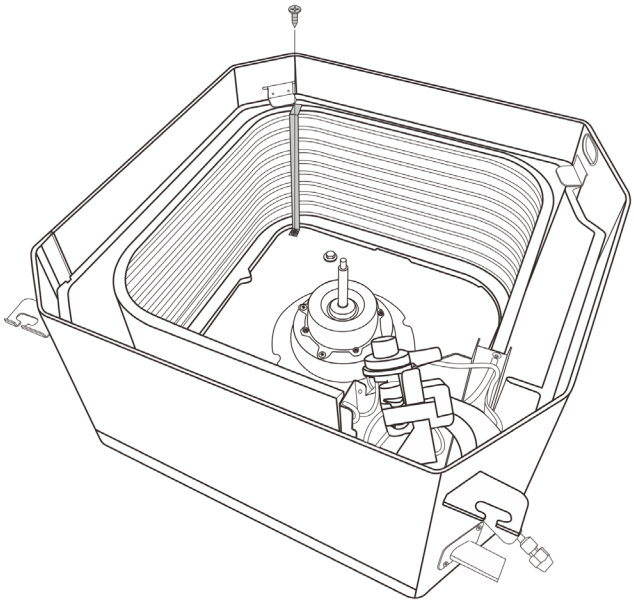 CJ_MCA_019

Note: This section is for reference only. Actual unit appearance may vary.

Indoor Unit Disassembly-Super-slim Cassette

Contents

1. Indoor Unit Disassembly 1

1.1 Front Panel 2

1.2 Electrical Parts 5

1.3 Display Board 6

1.4 Water Pump 8

1.5 Water Collector & Water Level Switch 9

1.6 Fan Motor and Fan 11

1.7 Evaporator 12

1. Indoor Unit Disassembly

1.1 Front Panel

Procedure	Illustration
1) Push one side of the grille clamp. (see CJ_MCD1_001)	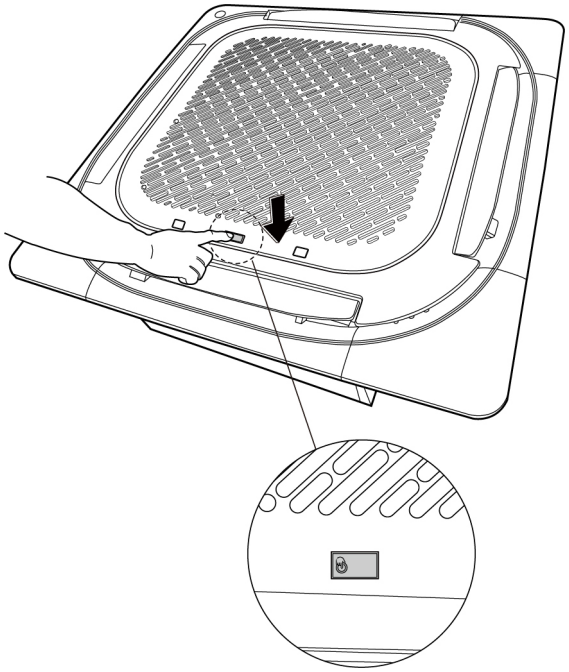 CJ_MCD1_001
2) Remove one screw then push two grille clamps to remove the air inlet grille assembly.(see CJ_MCD1_002)	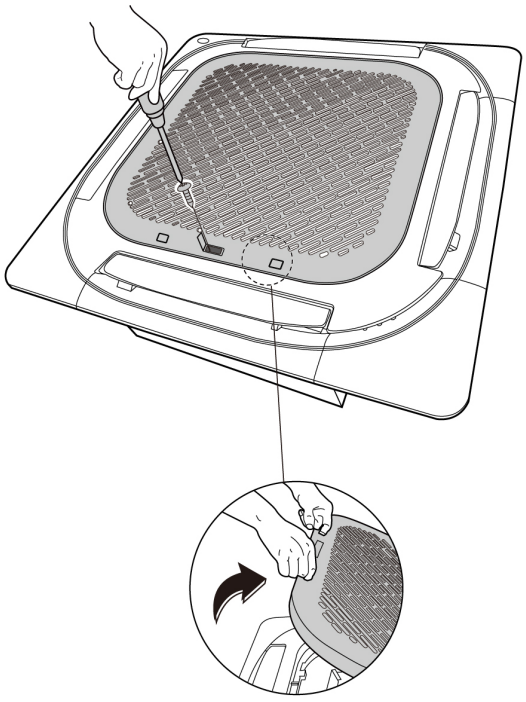 CJ_MCD1_002

Note: This section is for reference only. Actual unit appearance may vary.

Procedure	Illustration
3) Turn over the air inlet grille assembly then pull up the filter. (see CJ_ MCD1_003)	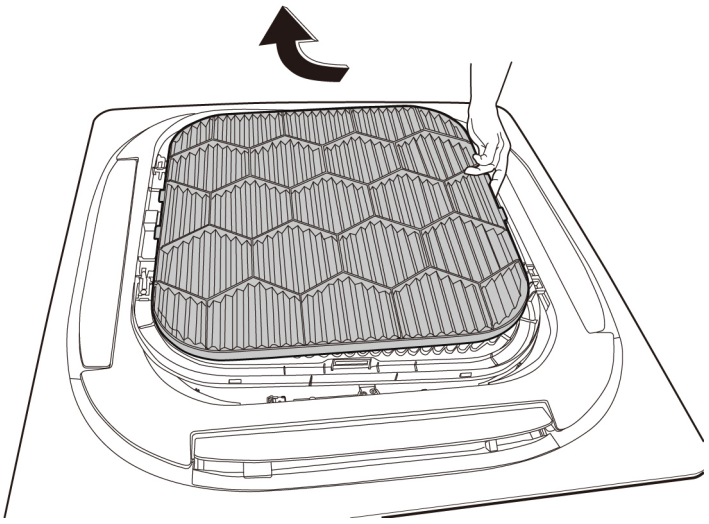 CJ_MCD1_003
4) Remove 2 screws and remove the cover of electronic control box. (see CJ_MCD1_004)	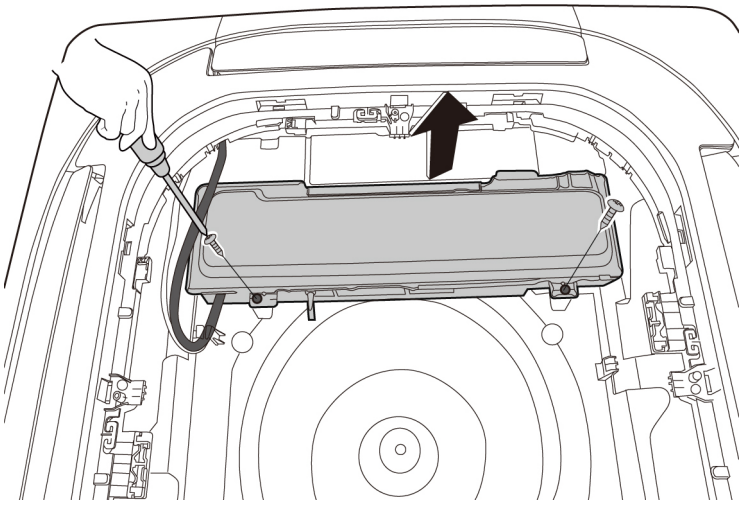 CJ_MCD1_004

Note: This section is for reference only. Actual unit appearance may vary.

Procedure	Illustration
5) Disconnect the connectors of display board and stepper motor and release the panel. (see CJ_MCD1_005)	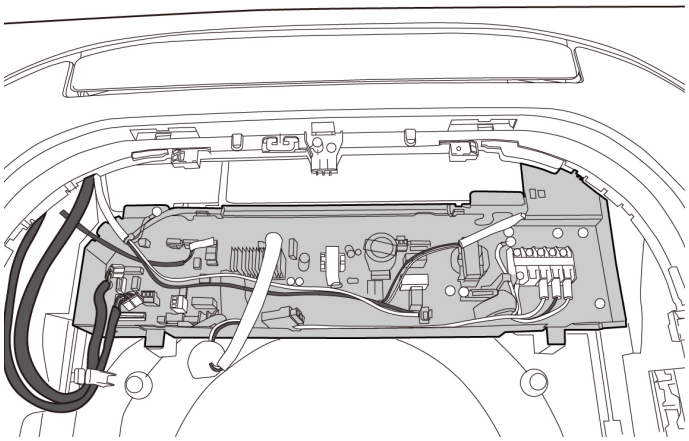 CJ_MCD1_005

Note: This section is for reference only. Actual unit appearance may vary.

1.2 Electrical Parts (Antistatic gloves must be worn.)

Procedure	Illustration
1) Remove 3 screws of electronic control box and 1 screw of earth wire.(see CJ_MCD1_006) 2) Disconnect the connectors of temperature sensor, pump, motor and water level switch. (see CJ_ MCD1_006) 3) Remove the electronic control box subassembly. (see CJ_MCD1_006)	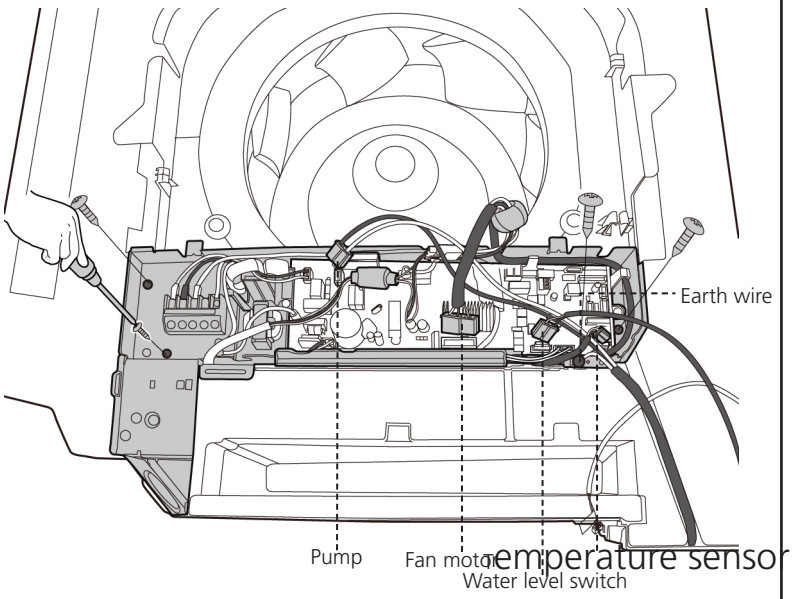 **CJ_MCD1_006**
4) Remove 2 screws of the main control board and 2 screws of earth wire. (see CJ_MCD1_007) 5) Disconnect connectors and then remove the main control board. (see CJ_MCD1_007)	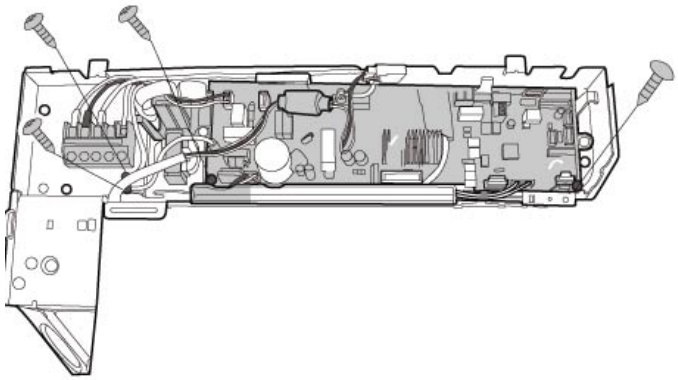 **CJ_MCD1_007**

Note: This section is for reference only. Actual unit appearance may vary.

1.3 Display Board

Procedure	Illustration
1) Open the install cover assembly(with display board) (see CJ_MCD1_008)	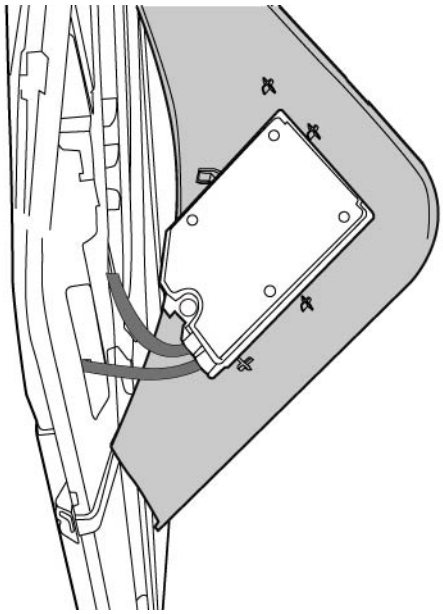 CJ_MCD1_008
2) Remove 1 screw of display window board. (see CJ_MCD1_009)	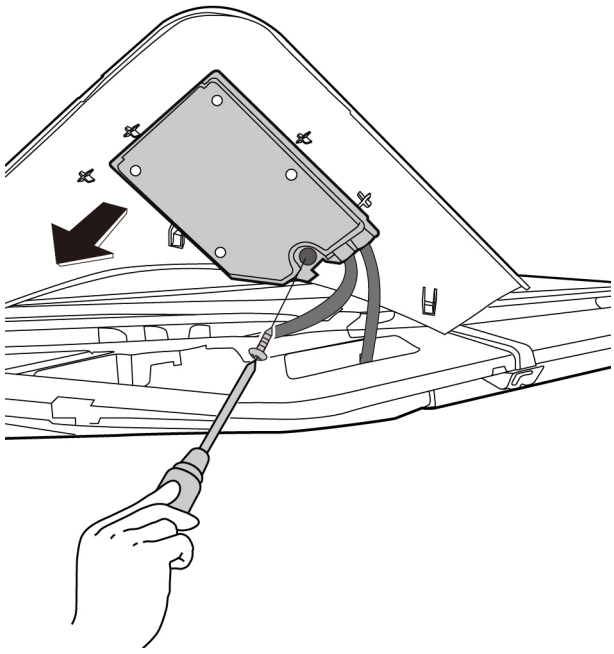 CJ_MCD1_009

Note: This section is for reference only. Actual unit appearance may vary.

Procedure	Illustration
3) Turn over the display board, push the swtich to remove the display board. (see CJ_MCD1_010)	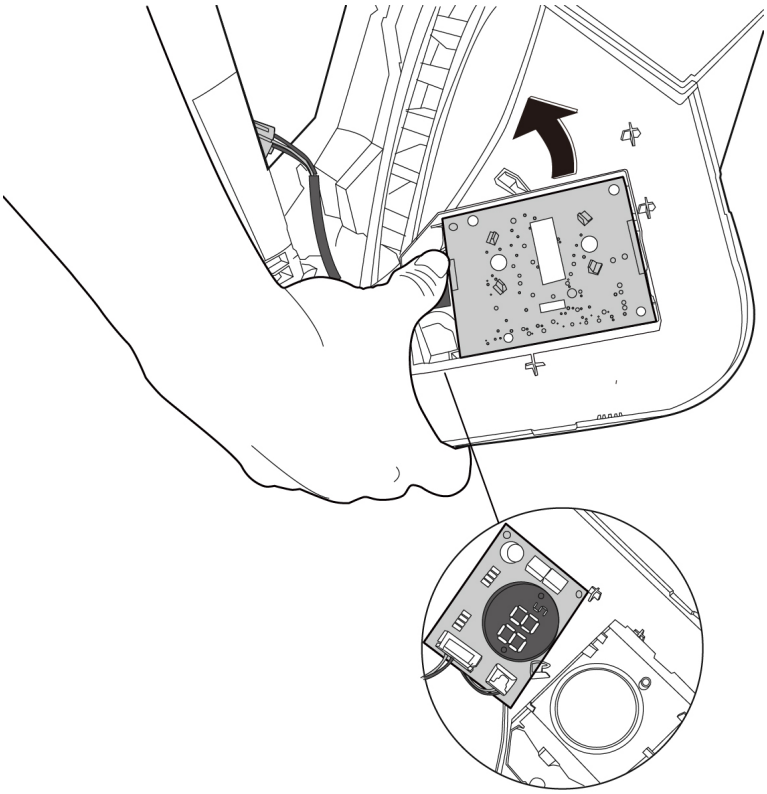 CJ_MCD1_010

Note: This section is for reference only. Actual unit appearance may vary.

1.4 Water Pump

Procedure	Illustration
1) Remove 5 screws fixing external water pump box assembly.(see CJ_MCD1_011)	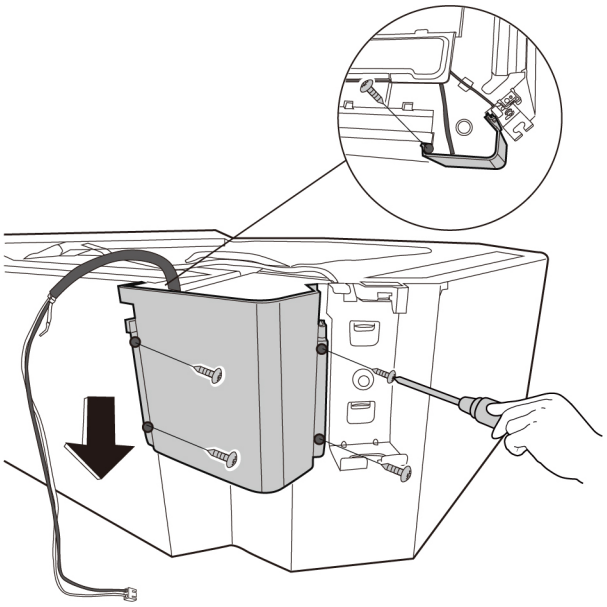 CJ_MCD1_011
2) Remove the water pump box assembly. (see CJ_MCD1_012)	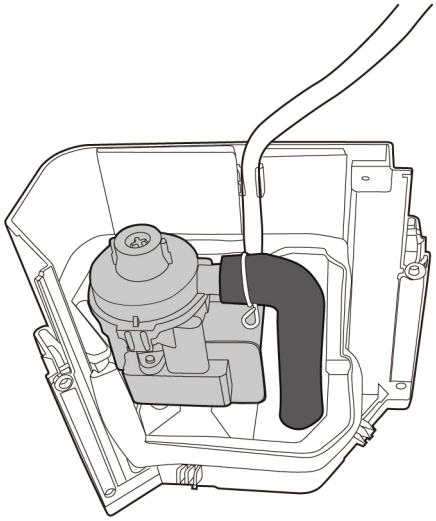 CJ_MCD1_012

Note: This section is for reference only. Actual unit appearance may vary.

1.5 Water Collector and Water Level Switch

Procedure	Illustration
1) Remove the 2 screws of the ventilation ring. (see CJ_MCD1_013)	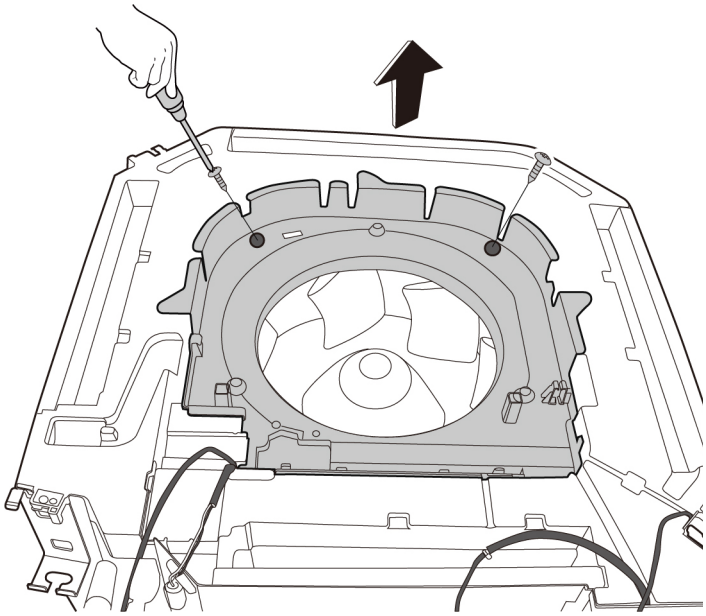 CJ_MCD1_013
2) Remove the 2 screws fixing the water collector. (see CJ_MCD1_014)	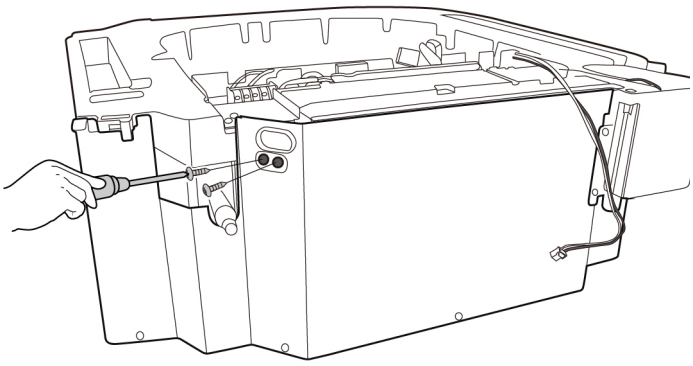 CJ_MCD1_014

Note: This section is for reference only. Actual unit appearance may vary.

Procedure	Illustration
3) Remove the 5 screws of the water collector subassembly. (see CJ_MCD1_015)	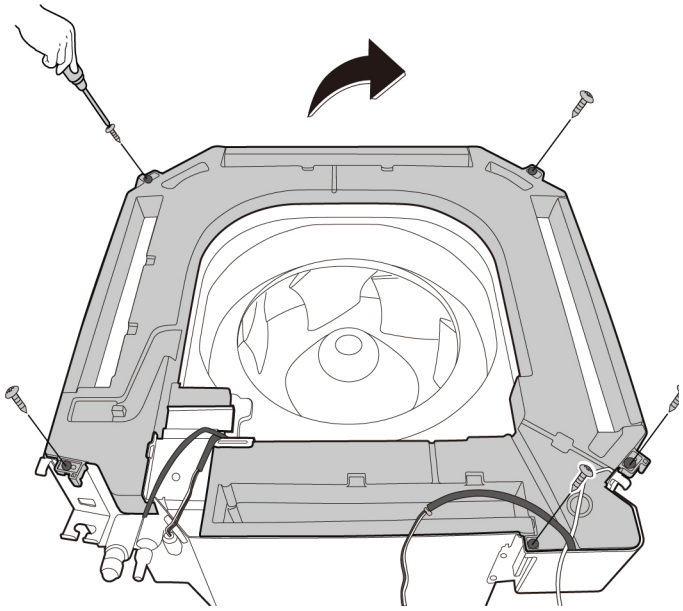 CJ_MCD1_015
4) Turn over the water collector subassembly and remove the water level switch. (see CJ_MCD1_016)	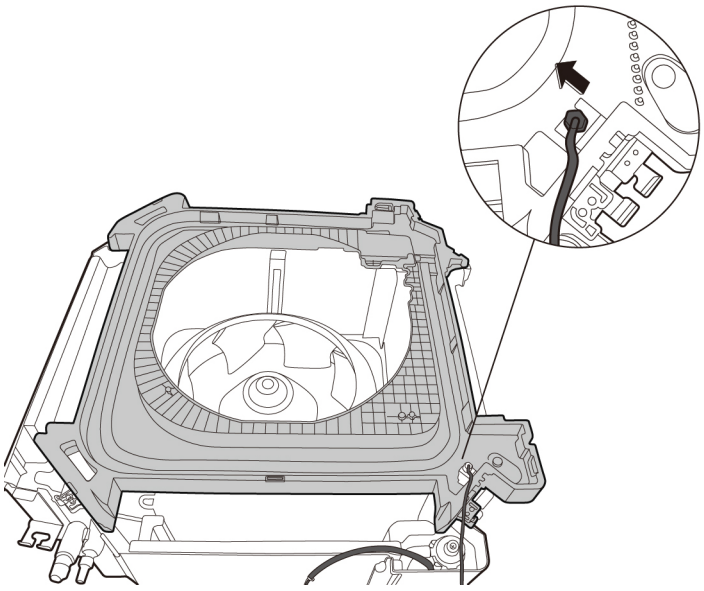 CJ_MCD1_016

Note: This section is for reference only. Actual unit appearance may vary.

1.6 Fan Motor and Fan

Procedure	Illustration
1) Remove the nut of the fan and then pull up the fan. (see CJ_MCD1_017)	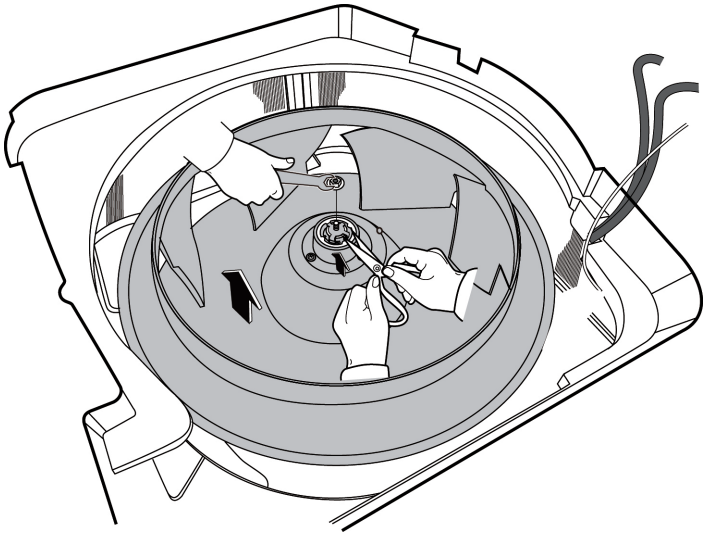 CJ_MCD1_017
2) Remove 2 screws of fixing board and 3 nuts of fan motor. (see CJ_MCD1_018)	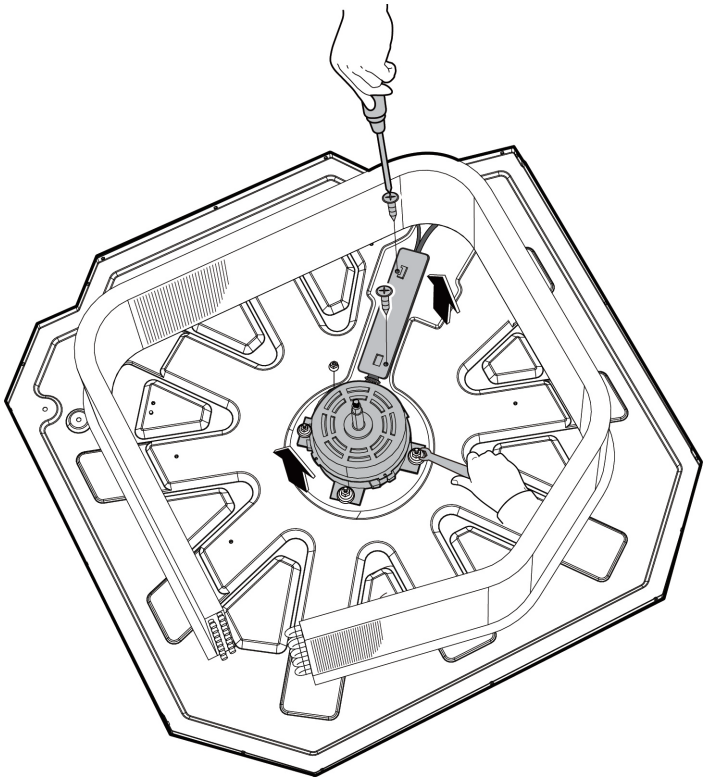 CJ_MCD1_018

Note: This section is for reference only. Actual unit appearance may vary.

1.7 Evaporator

Procedure	Illustration
1) Remove 2 screws of pipe clamp board. (see CJ_MCD1_019)	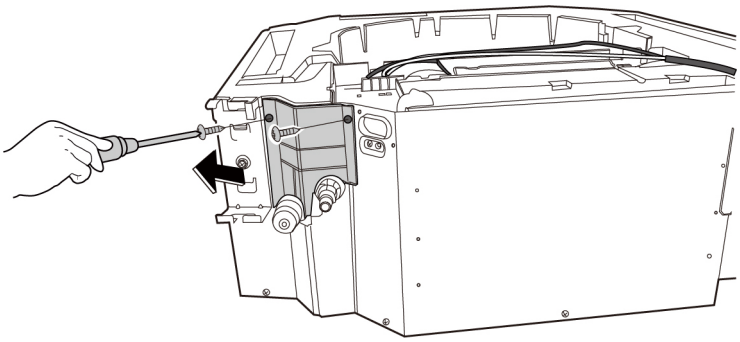 CJ_MCD1_019
2) Remove 4 screws of the evaporator fixing bracket and then remove it. (see CJ_MCD1_020)	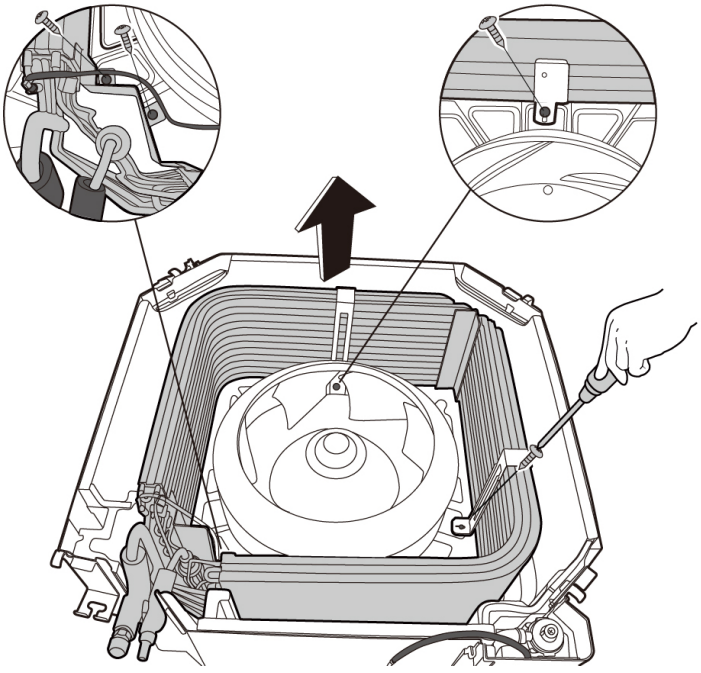 CJ_MCD1_020

Note: This section is for reference only. Actual unit appearance may vary.

Indoor Unit Disassembly -A6 DUCT

Contents

1. Indoor Unit Disassembly 1

1.1 Electrical Parts 2

1.2 Fan Motor and Fan 5

1.3 Evaporator 7

1. Indoor Unit Disassembly

1.1 Electrical Parts (Antistatic gloves must be worn.)

Procedure	Illustration
1) Remove 5 screws of the cover of electronic control box and then remove the cover. (see CJ_A6_001)	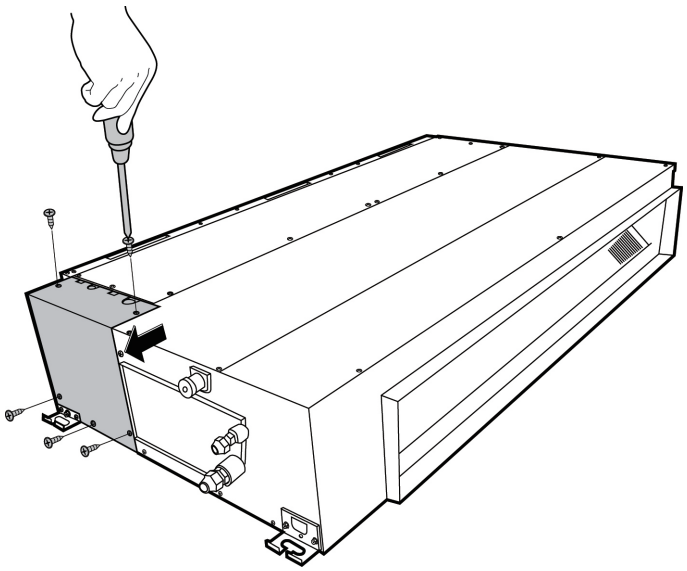 CJ_A6_001
2) Remove 2 screws of the electronic control box. Then release 2 hooks of the main control board. (see CJ_A6_002)	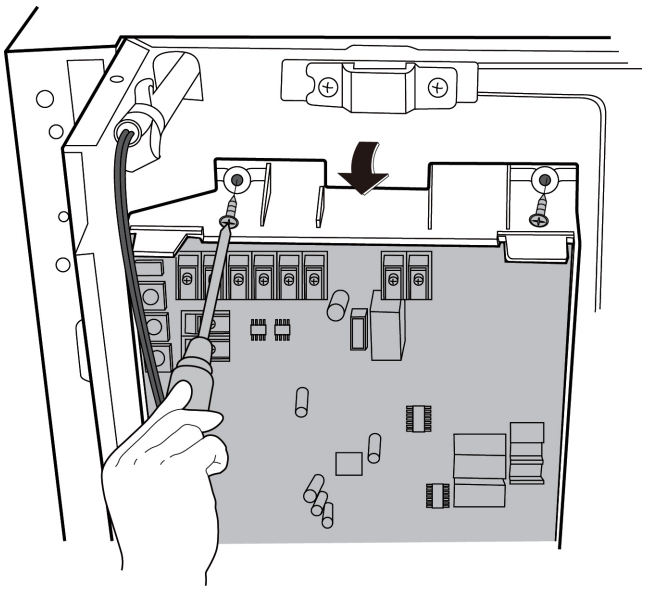 CJ_A6_002

Note: This section is for reference only. Actual unit appearance may vary.

Procedure	Illustration
3) Disconnect the connectors and then remove the front main control board. (see CJ_A6_003)	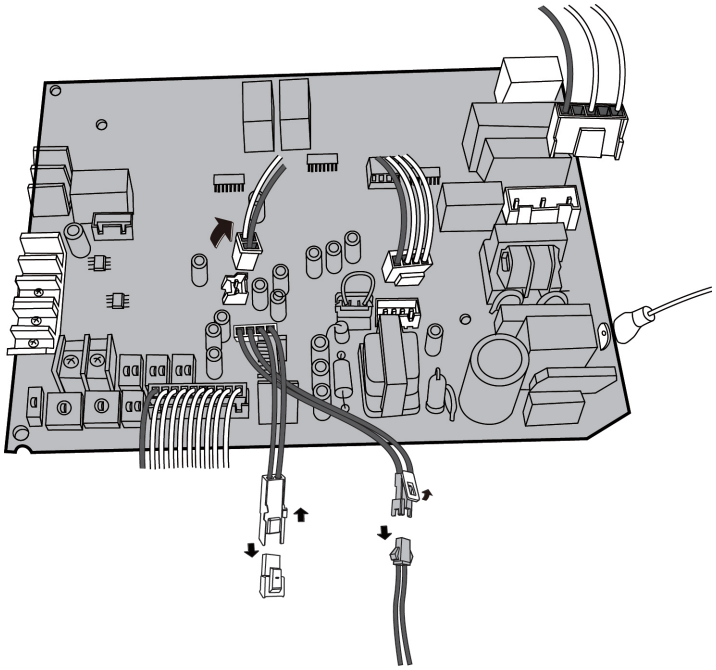 CJ_A6_003
4) Turn over the electronic control box. Disconnect the connectors and remove 2 screws of rear main control board. (see CJ_A6_004)	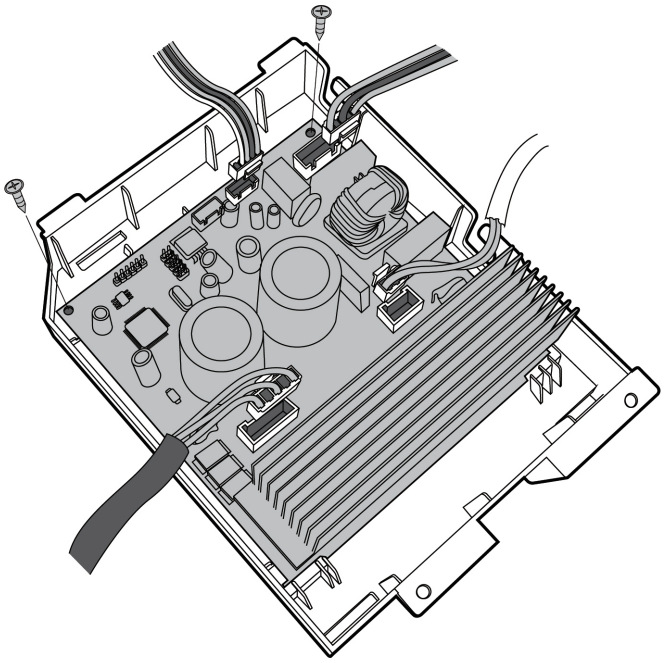 CJ_A6_004

Note: This section is for reference only. Actual unit appearance may vary.

Procedure	Illustration
5) Remove 2 screws of reactor and remove the reactor. (see CJ_A6_005)	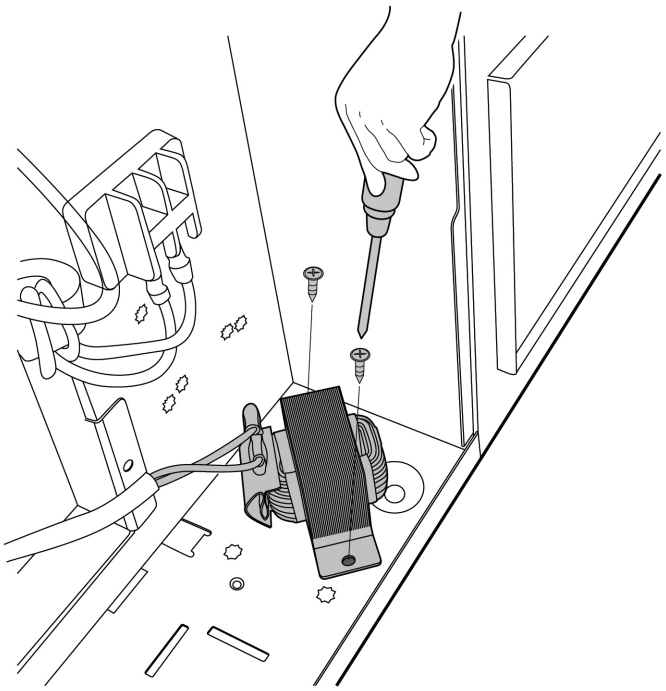 CJ_A6_005

Note: This section is for reference only. Actual unit appearance may vary.

1.2 Fan motor and fan

Procedure	Illustration
1) Remove 10 screws of the top cover and then remove the top cover. (see CJ_A6_006)	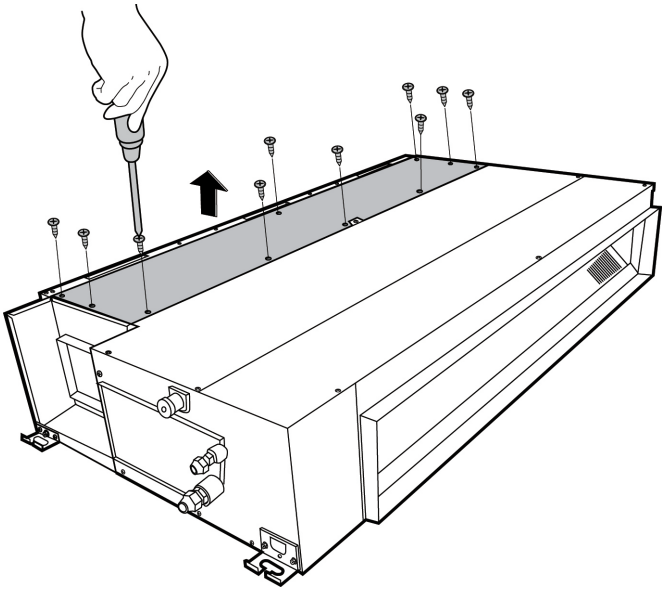 CJ_A6_006
2) Release 3 hooks of volute shell. (see CJ_A6_007)	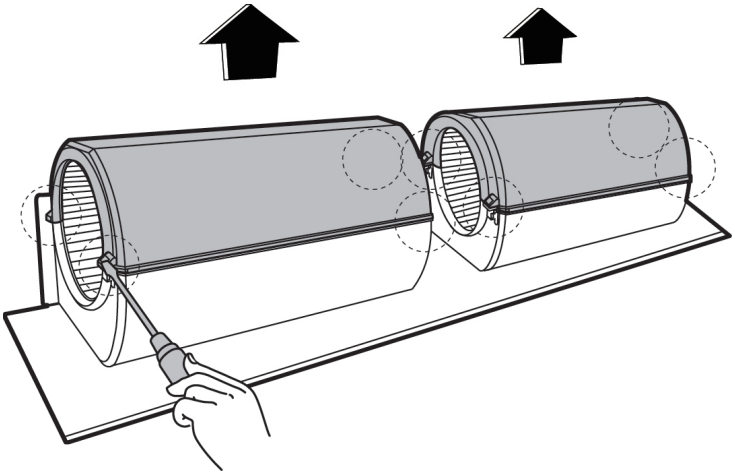 CJ_A6_007

Note: This section is for reference only. Actual unit appearance may vary.

Procedure	Illustration
3) Remove the fiing screws of fan (2 screws). (see CJ_A6_008)	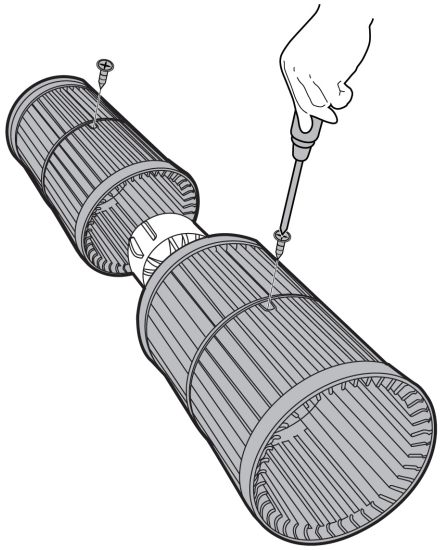 CJ_A6_008

Note: This section is for reference only. Actual unit appearance may vary.

1.3 Evaporator

Procedure	Illustration
1) Remove 9 Screws of the water collecter and remove the water collecter. (see CJ_A6_009)	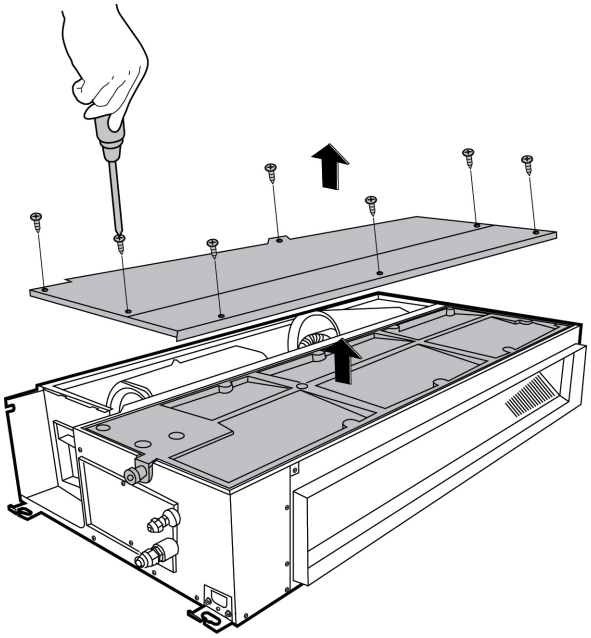 CJ_A6_009
2) Remove the screws of the pipe clamp board and the left side board (3 for the pipe clamp and 9 for left side board). (see CJ_A6_010)	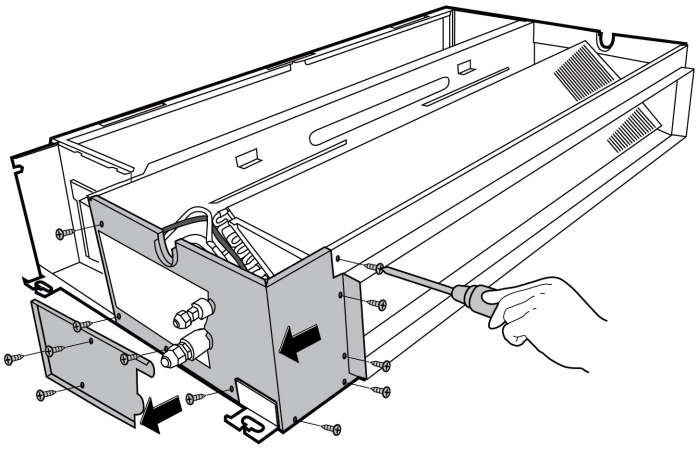 CJ_A6_010

Note: Remove the front panel (refer to 1. Front panel) before disassembling electrical parts.

Procedure	Illustration
3) Remove 2 screws of the evaporator support and then pull up the temperature sensor. (see CJ_A6_011)	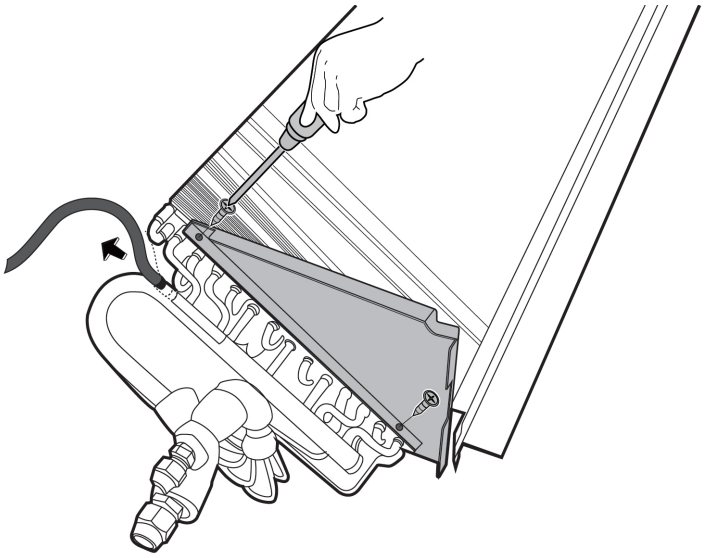 CJ_A6_011
4) Remove the screw of the evaporator and then remove it. (see CJ_A6_012)	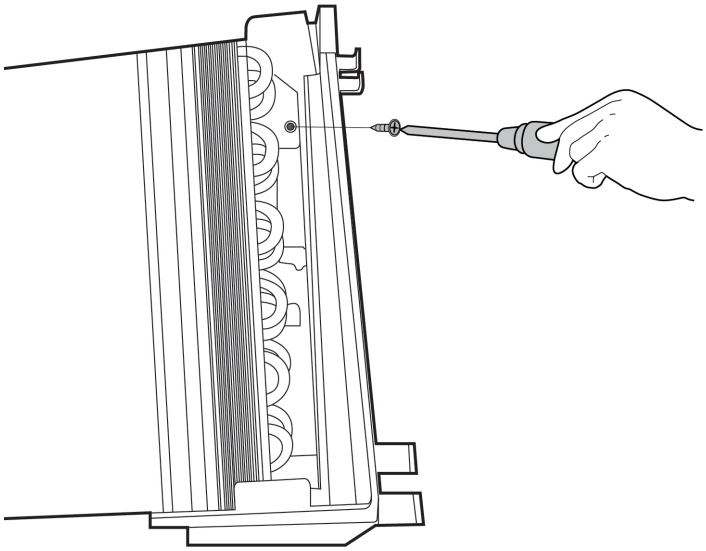 CJ_A6_012

Note: This section is for reference only. Actual unit appearance may vary.

Indoor Unit Disassembly-Floor Ceiling

Contents

1. Indoor Unit Disassembly 1

1.1 Front Panel 2

1.2 Electrical Parts 3

1.3 Fan Motor and Fan 4

1.4 Evaporator 7

1.5 Display Board 11

1. Indoor Unit Disassembly

1.1 Front Panel

Procedure	Illustration
1) Remove 2 screws of return air grille subassembly and release 2 hooks. (see CJ_FC_001)	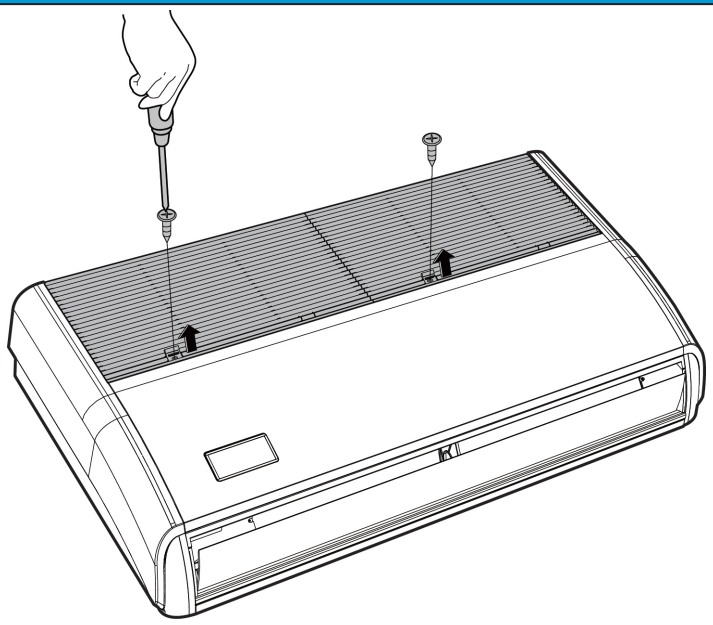 CJ_FC_001
2) Release 2 hooks for each filter, and then pull up the filter. (see CJ_FC_002)	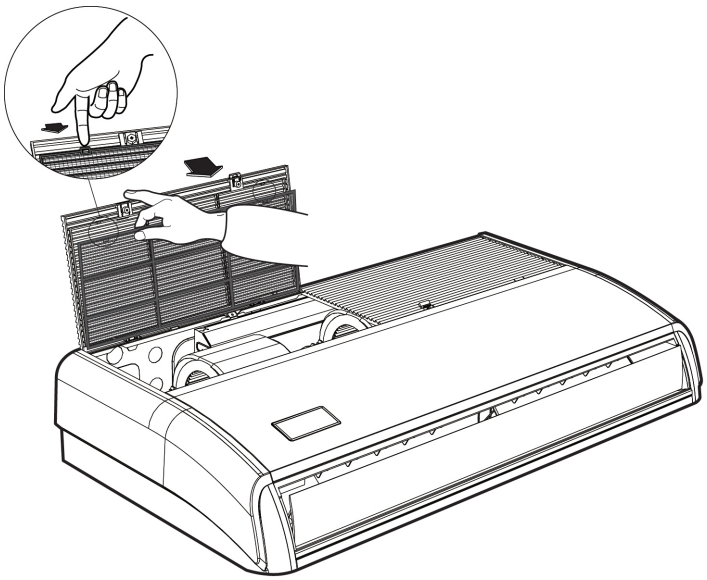 CJ_FC_002

Note: This section is for reference only. Actual unit appearance may vary.

1.2 Electrical Parts (Antistatic gloves must be worn.)

Note: Remove the front panel (refer to 1.1 front panel) before disassembling electrical part.

Procedure	Illustration
1) Remove 4 screws of the cover of electronic control box and then remove the cover. (see CJ_FC_003)	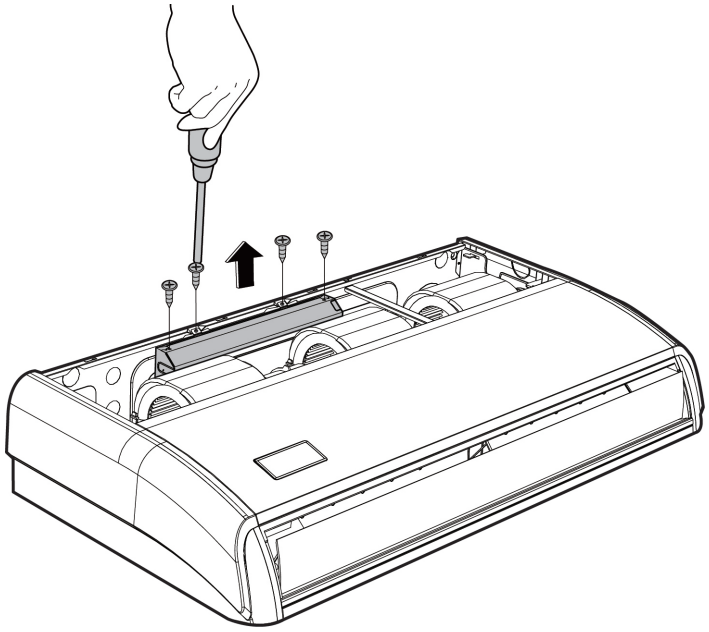 CJ_FC_003
2) Disconnect the connectors and then remove the main control board. (see CJ_FC_004)	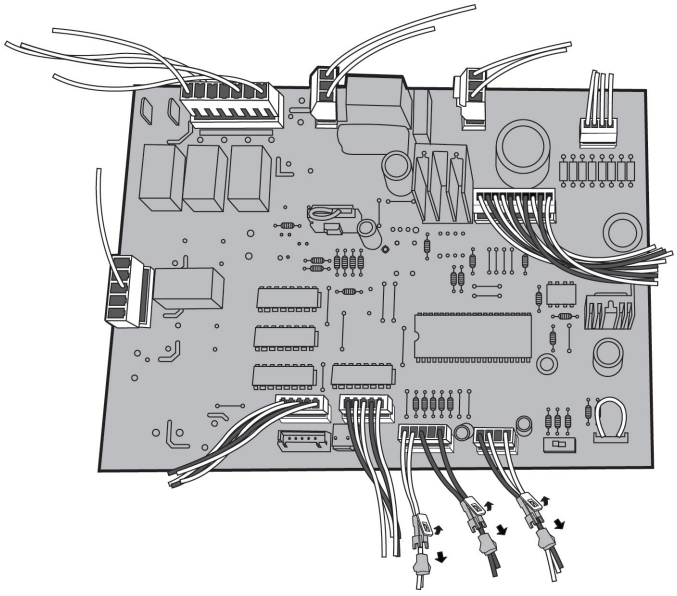 CJ_FC_004

Note: This section is for reference only. Actual unit appearance may vary.

1.3 Fan motor and fan

Note: Remove the front panel (refer to 1.1 front panel) before disassembling fan motor and fan.

Procedure	Illustration
1) Remove the fix screw of supporting board. (see CJ_FC_005)	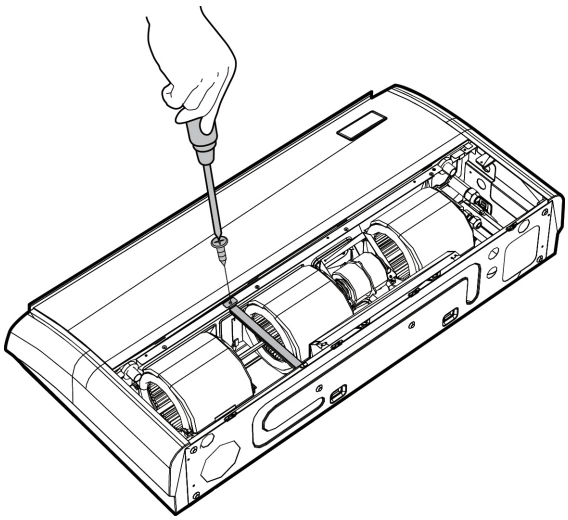 CJ_FC_005
2) Remove the screws of fan motor support and then remove the screw of ground wire. (see CJ_FC_006)	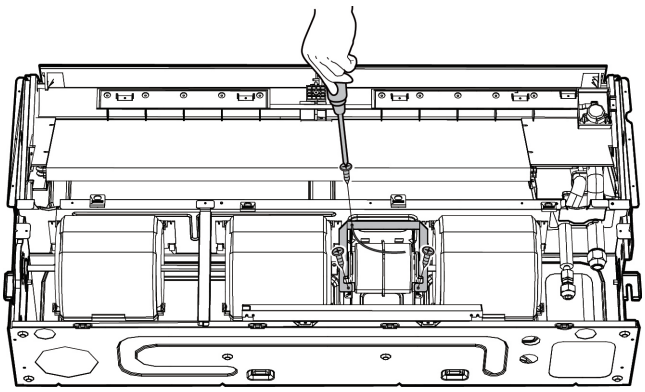 CJ_FC_006

Note: This section is for reference only. Actual unit appearance may vary.

Procedure	Illustration
3) Remove the two screws of the fan motor shaft. (see CJ_FC_007)	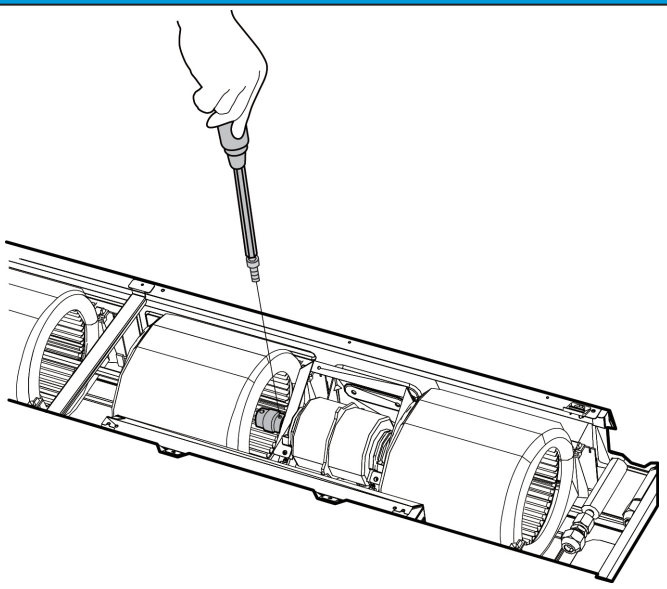 CJ_FC_007
4) Release the hooks of the volute shell and then pull up it. (see CJ_FC_008)	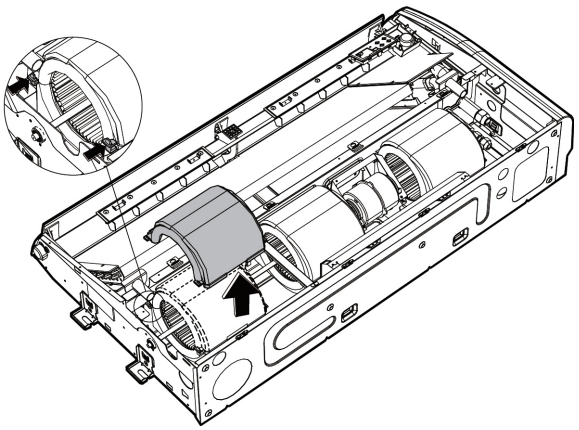 CJ_FC_008

Note: This section is for reference only. Actual unit appearance may vary.

Procedure	Illustration
5) Remove the screws of fan (3 screws). (see CJ_FC_009)	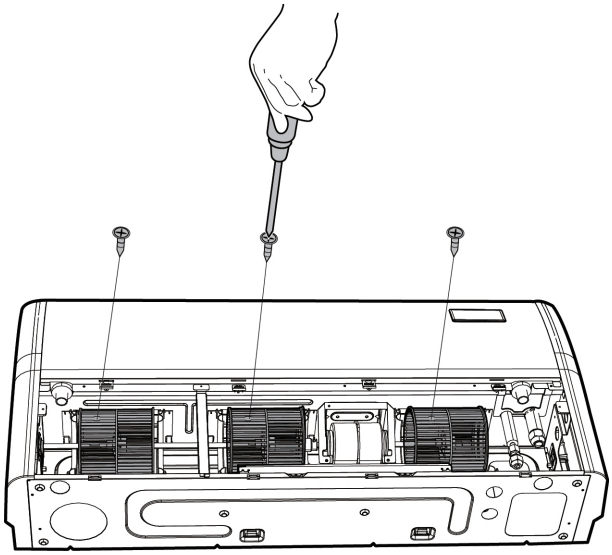 CJ_FC_009

Note: This section is for reference only. Actual unit appearance may vary.

1.4 Evaporator

Note: Remove the front panel (refer to 1.1 front panel) before disassembling evaporator.

Procedure	Illustration
1) Remove the screws of left and right panel and then push it in the direction shown in the figure to move it. (see CJ_FC_010)	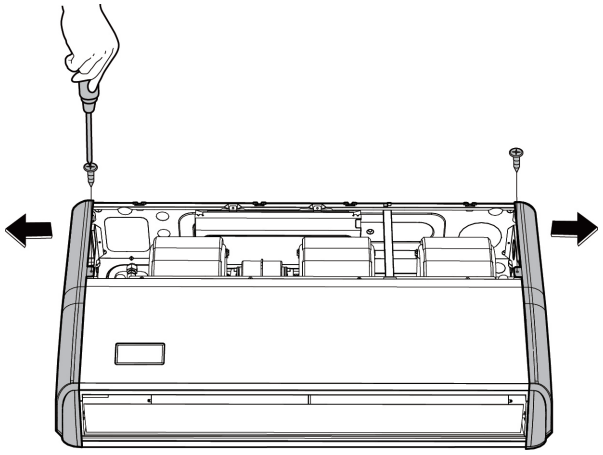 CJ_FC_010
2) Remove the screws of the front panel(9 screws). (see CJ_FC_011)	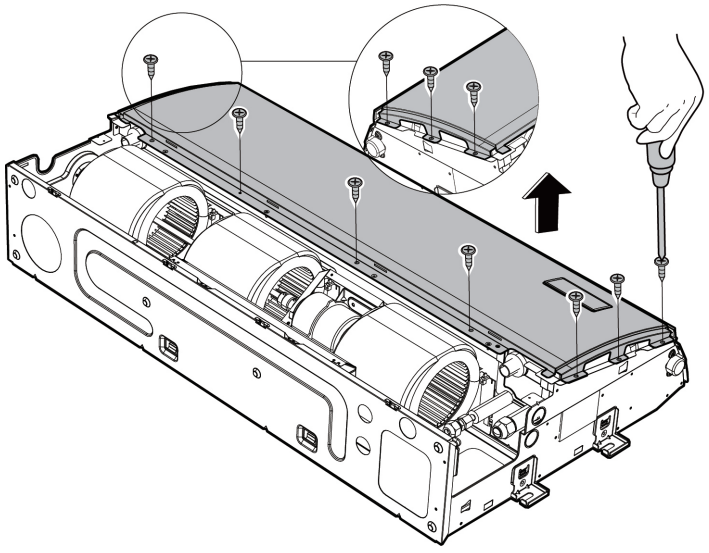 CJ_FC_011

Note: This section is for reference only. Actual unit appearance may vary.

Procedure	Illustration
3) Remove the 1 screw of the water collector. (see CJ_FC_012)	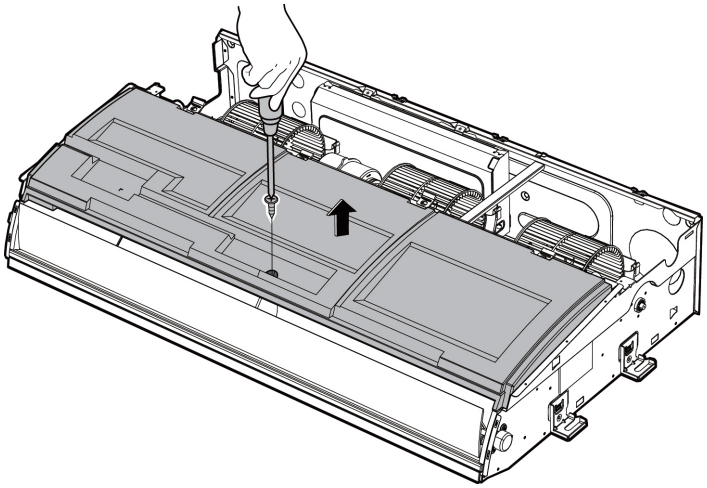 CJ_FC_012
4) Remove 3 screws of board and then remove it. (see CJ_FC_013)	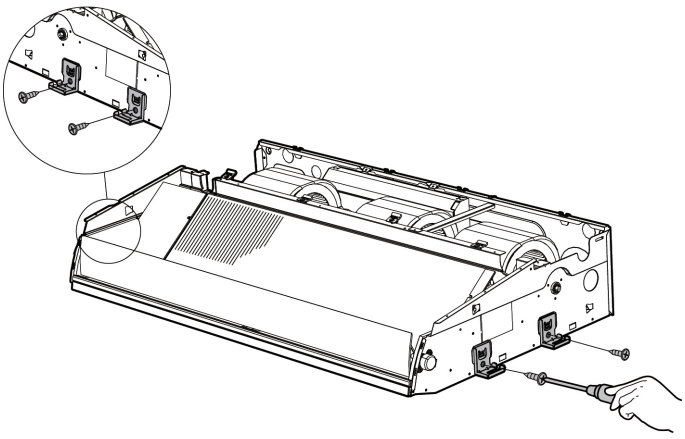 CJ_FC_013

Note: This section is for reference only. Actual unit appearance may vary.

Procedure	Illustration
5) Remove the screws of the pipe clamp board. (see CJ_FC_014)	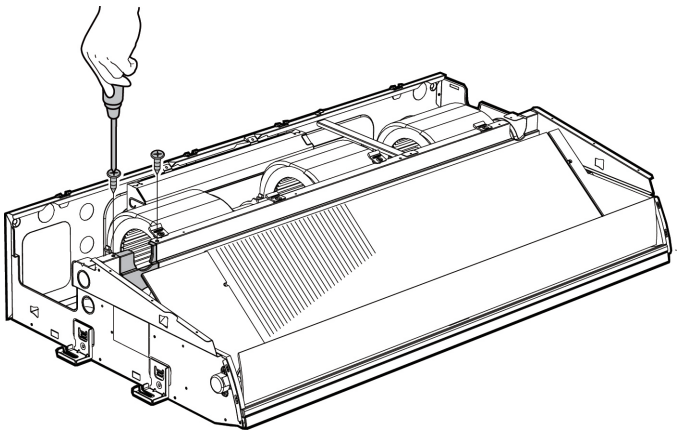 CJ_FC_014
6) Pull up the temperature sensor. (see CJ_FC_015)	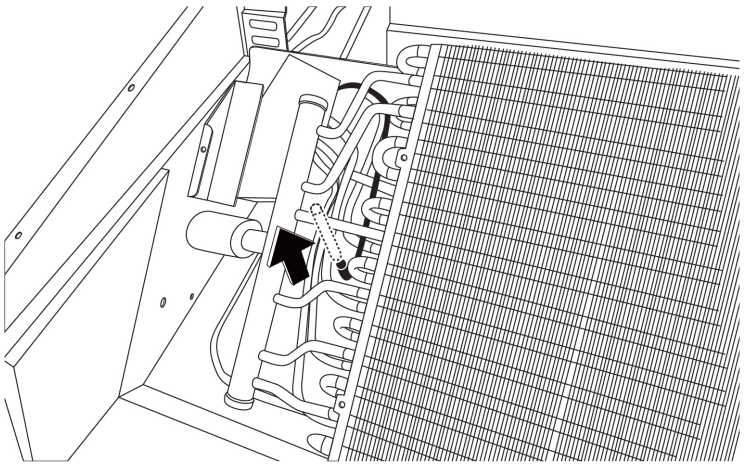 CJ_FC_015

Note: This section is for reference only. Actual unit appearance may vary.

Procedure	Illustration
7) Remove the screws of the front evaporator support. (5 screws) (see CJ_FC_016)	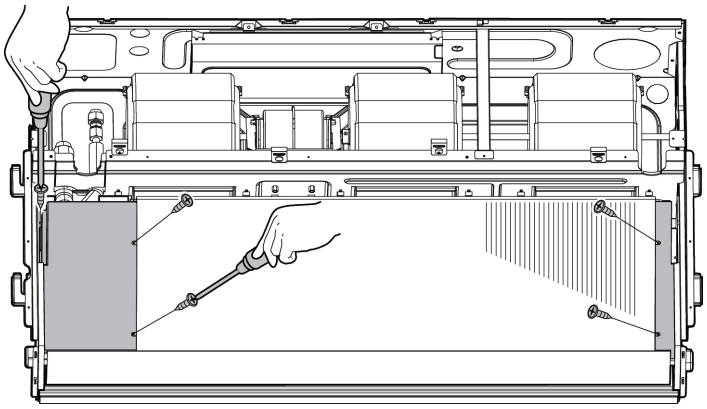 CJ_FC_016
8) Remove the screws of the rear evaporator support then pull out the evaporator. (4 screws) (see CJ_FC_017)	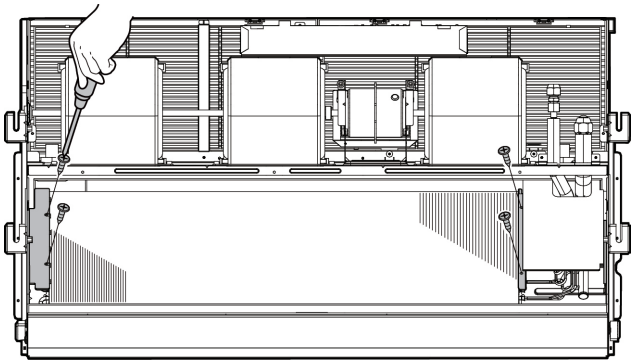 CJ_FC_017
9) Remove 2 screws and Remove step motor. (see CJ_FC_018)	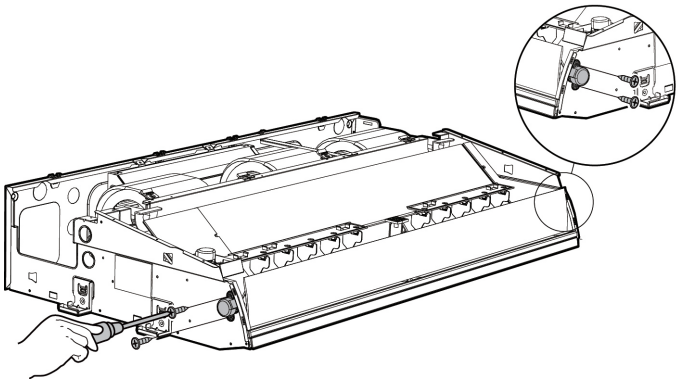 CJ_FC_018

Note: This section is for reference only. Actual unit appearance may vary.

1.5 Display Board

Procedure	Illustration
1) Remove 2 screws of display board and remove the display. (see CJ_FC_019)	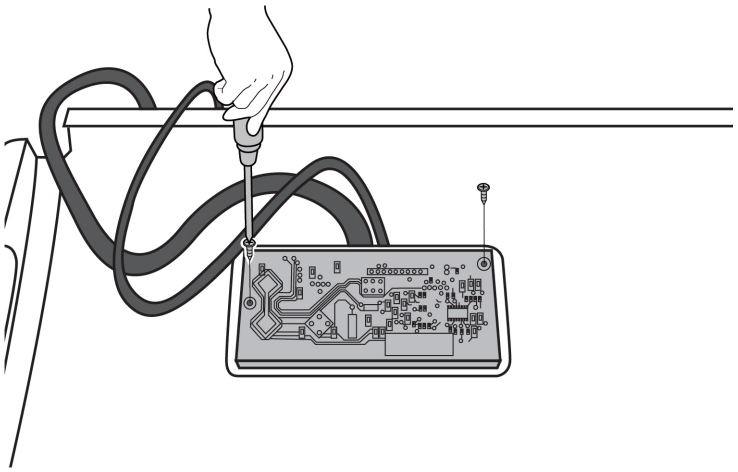 CJ_FC_019

Note: This section is for reference only. Actual unit appearance may vary.

Outdoor Unit Disassembly

Contents

1. Outdoor Unit Table 2

2. Outdoor Unit Disassembly 3

2.1 Panel Plate 3

2.2 Electrical Parts 25

2.3 Fan Assembly 54

2.4 Fan Motor 55

2.5 Sound Blanket 56

2.6 Four-way Valve 57

2.7 Compressor 58

1. Outdoor Unit Disassembly

1.1 Outdoor Unit Table

Outdoor Unit Model	Panel Plate	PCB Board
MOX230-12HFN8-QRD0W(GA)	X230	PCB Board 16
MOX330U-18HFN8-QRD0W(GA)	X330	PCB Board 16
MOX430U-24HFN8-QRD0W(GA)	X430	PCB Board 6
MOD30U-30HFN8-QRD0W(GA)	D30	PCB Board 6
MOD30U-36HFN8-QRD0W(GA)	D30	PCB Board 13
MOD30U-36HFN8-RRD0W(GA)	D30	PCB Board 10
MOD30U-42HFN8-QRD0W(GA)	D30	PCB Board 13
MOE30U-48HFN8-RRD0W(GA)	E30	PCB Board 17
MOE30U-55HFN8-RRD0W(GA)	E30	PCB Board 17

2. Outdoor Unit Disassembly

2.1 Panel Plate

1. BA30

Procedure	Illustration
1) Turn off the air conditioner and the power breaker. 2) Remove the screws of the big handle and then remove the big handle (1 screws) (see CJ_BA30_001). 3) Remove the screws of the top cover and then remove the top cover (3 screws). One of the screws is located underneath the big handle (see CJ_BA30_002).	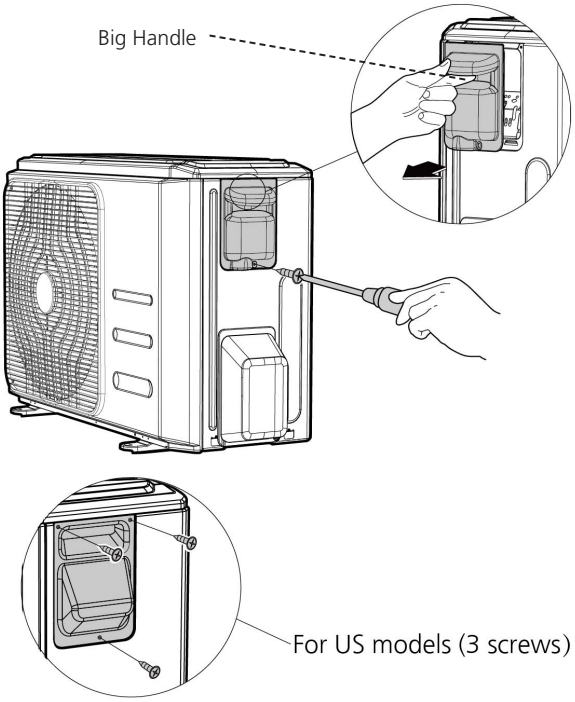 **CJ_BA30_001** 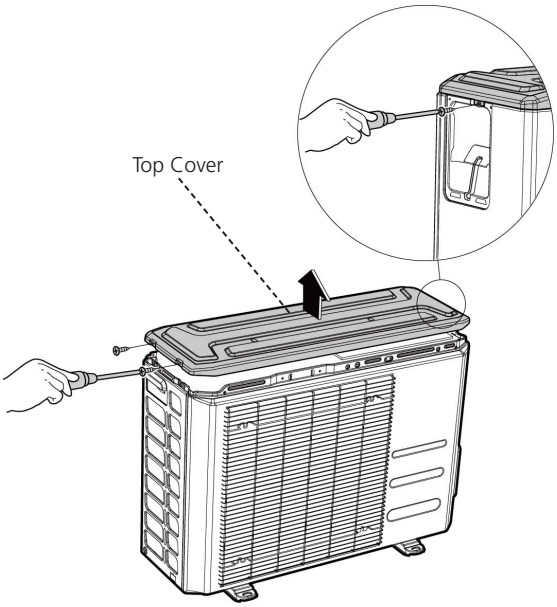 **CJ_BA30_002**

Note: This section is for reference only. Actual unit appearance may vary.

Procedure	Illustration
4) Remove the screws of the front panel and then remove the front panel (7 screws) (see CJ_BA30_003).	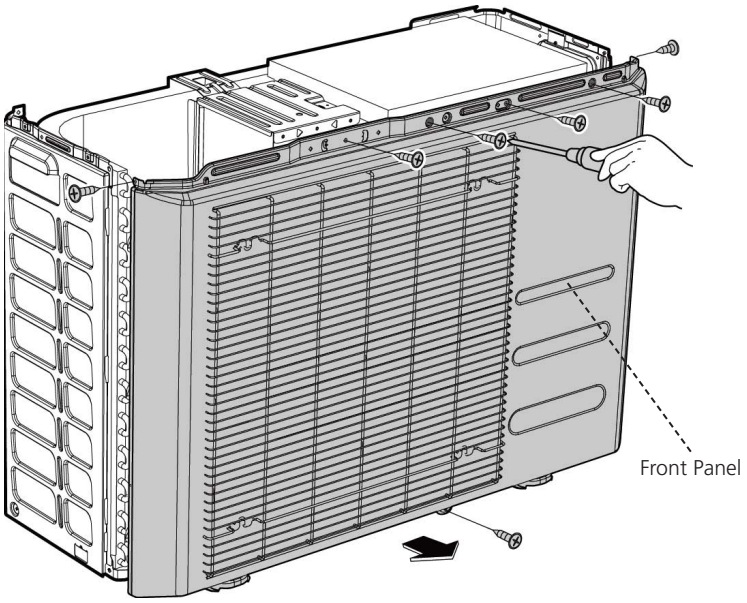 **CJ_BA30_003**
5) Remove the screws of water collecting cover (2 screws) (see CJ_BA30_004).	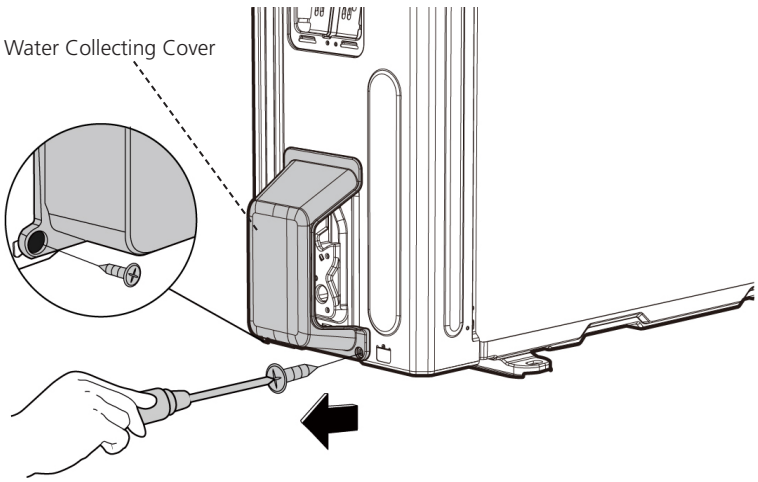 **CJ_BA30_004**

Note: This section is for reference only. Actual unit appearance may vary.

Procedure	Illustration
6) Remove the screws of the rear net and then remove the rear net (2 screws) (see CJ_BA30_005). (for some models)	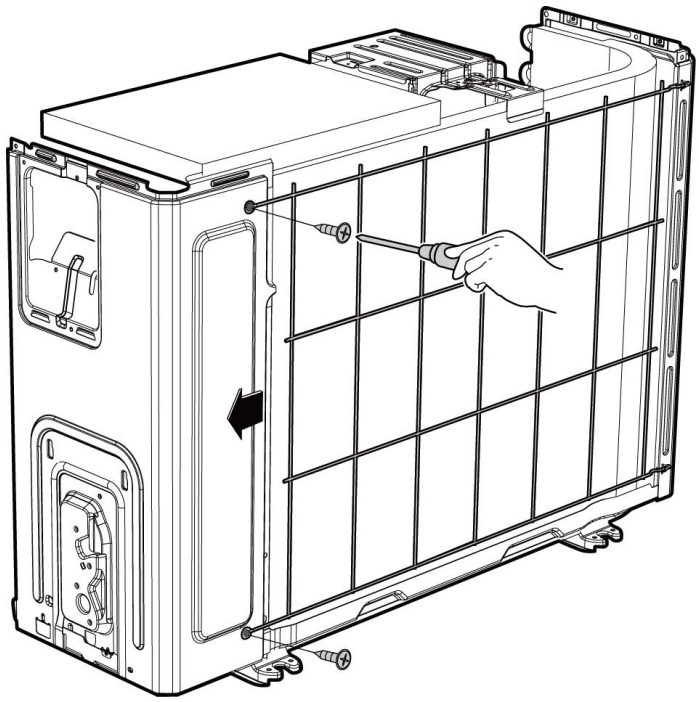 CJ_BA30_005
7) Remove the screws of the right panel and then remove the right panel (6 screws) (see CJ_BA30_006).	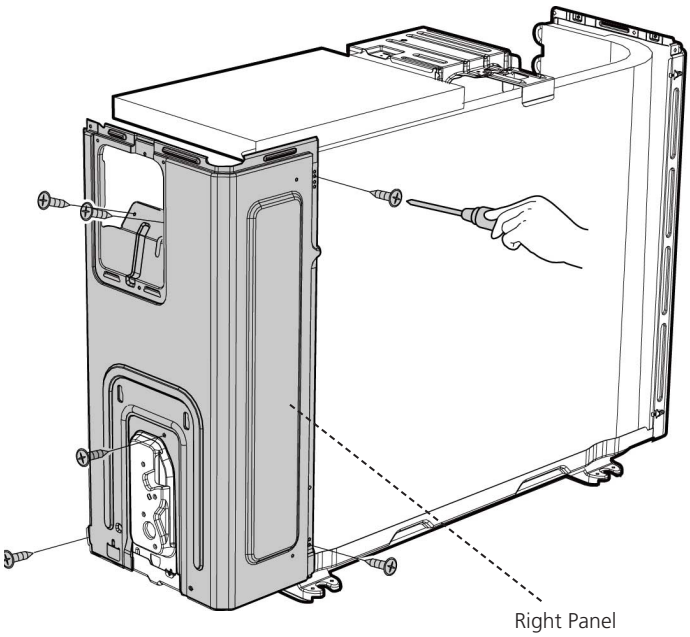 CJ_BA30_006

Note: This section is for reference only. Actual unit appearance may vary.

2. B30

Procedure	Illustration
1) Turn off the air conditioner and the power breaker. 2) Remove the screws of the big handle and then remove the big handle (1 screws) (see CJ_B30_001).	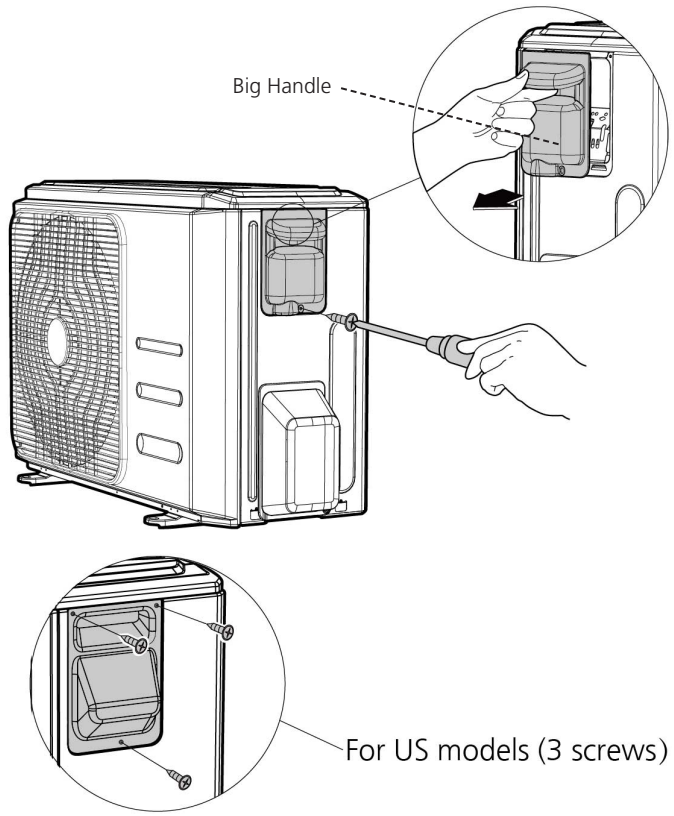 **CJ_B30_001**
3) Remove the screws of the top cover and then remove the top cover (3 screws). One of the screws is located underneath the big handle (see CJ_B30_002).	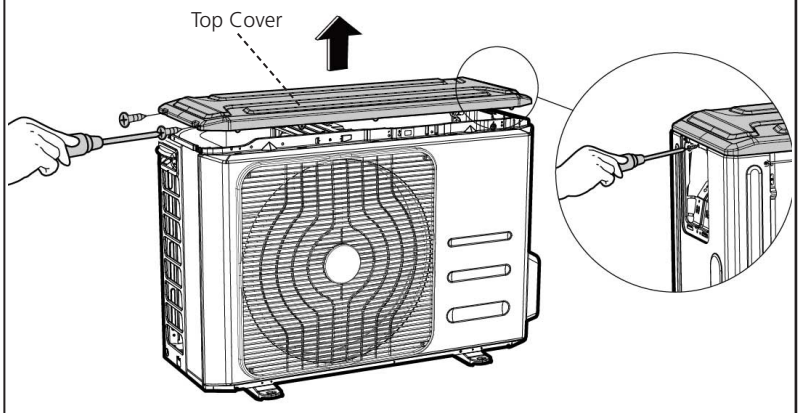 **CJ_B30_002**

Note: This section is for reference only. Actual unit appearance may vary.

Procedure	Illustration
4) Remove the screws of the front panel and then remove the front panel (8 screws) (see CJ_B30_003).	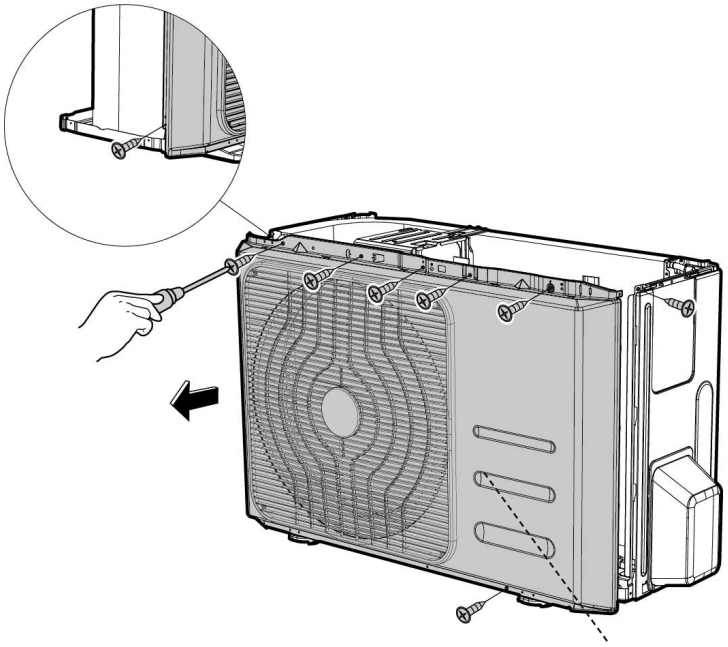 **CJ_B30_003**
5) Remove the screws of water collecting cover and then remove the water collecting cover (2 screws) (see CJ_B30_004).	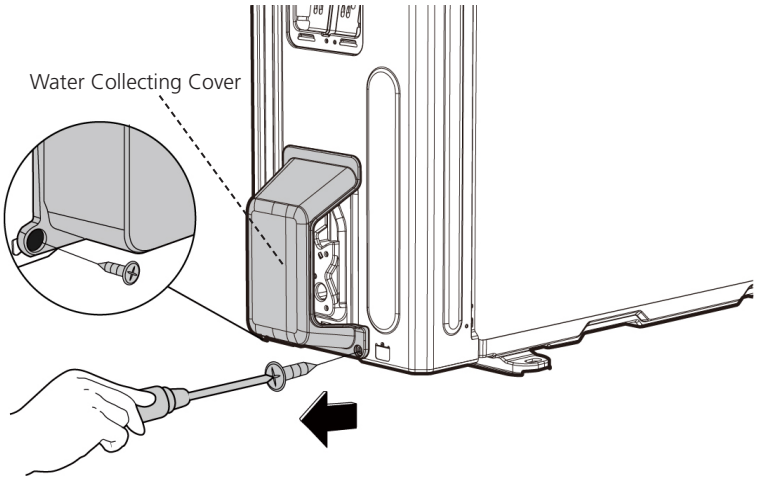 **CJ_B30_004**

Note: This section is for reference only. Actual unit appearance may vary.

Procedure	Illustration
6) Remove the screws of the rear net and then remove the rear net (2 screws) (see CJ_B30_005). (for some models)	 CJ_B30_005
7) Remove the screws of the right panel and then remove the right panel (5 screws) (see CJ_B30_006).	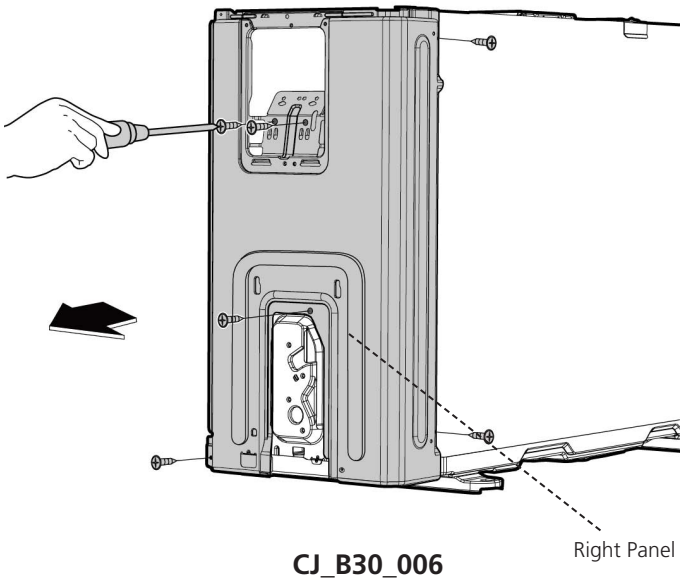 CJ_B30_006

Note: This section is for reference only. Actual unit appearance may vary.

3. CA30

Procedure	Illustration
1) Turn off the air conditioner and the power breaker. 2) Remove the screws of the big handle and then remove the big handle (1 screws) (see CJ_CA30_001).	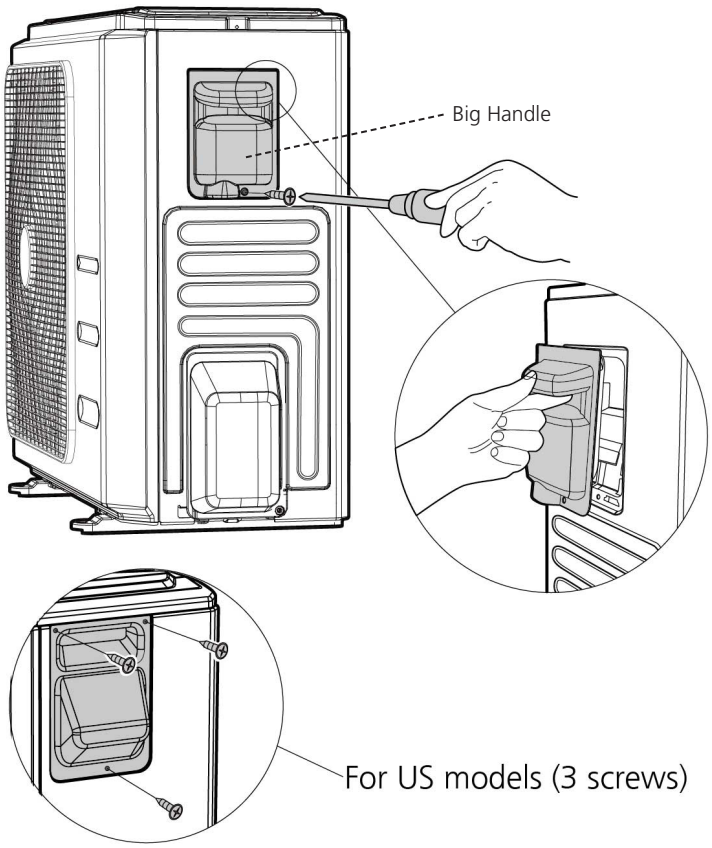 **CJ_CA30_001**
3) Remove the screws of the top cover and then remove the top cover (3 screws). One of the screws is located underneath the big handle (see CJ_ CA30_002).	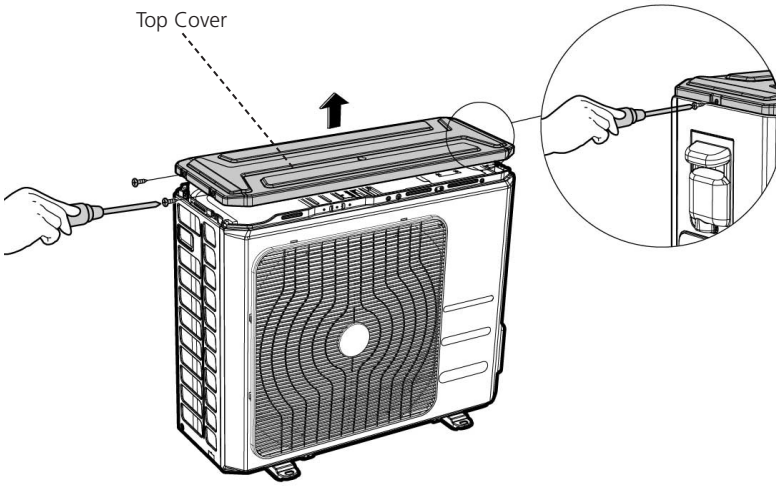 **CJ_CA30_002**

Note: This section is for reference only. Actual unit appearance may vary.

Procedure	Illustration
4) Remove the screws of the front panel and then remove the front panel (7 screws) (see CJ_CA30_003).	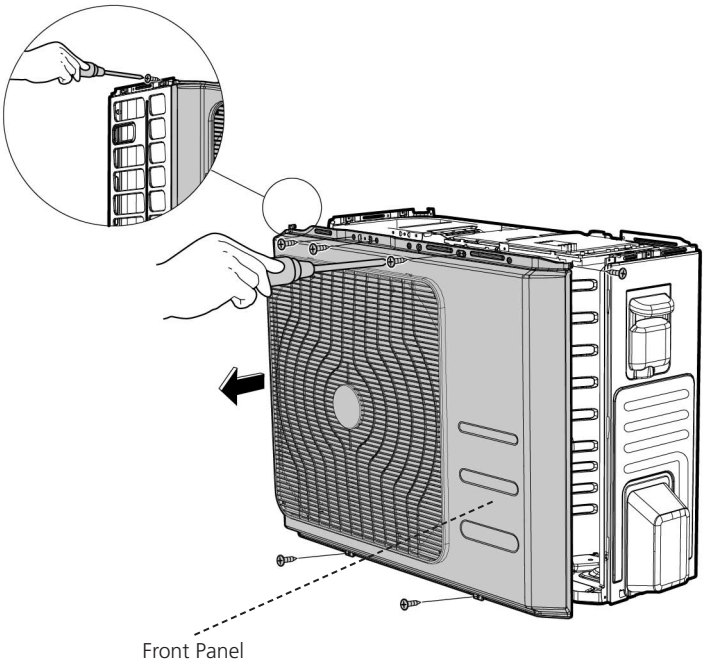 **CJ_CA30_003**
5) Remove the screws of water collecting cover and then remove the water collecting cover (2 screws) (see CJ_CA30_004).	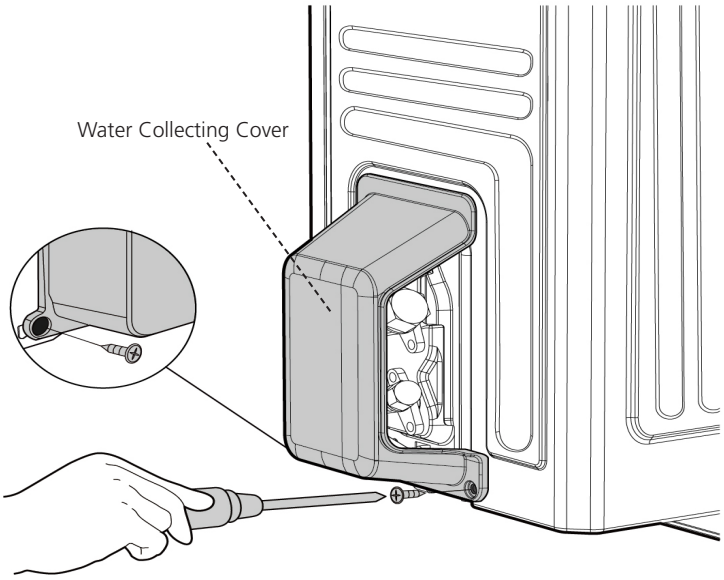 **CJ_CA30_004**

Note: This section is for reference only. Actual unit appearance may vary.

Procedure	Illustration
6) Remove the screws of the rear net and then remove the rear net (2 screws) (see CJ_CA30_005). (for some models)	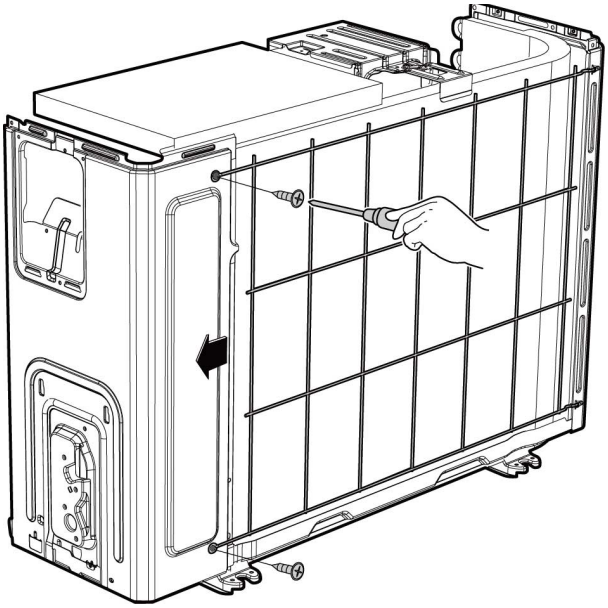 CJ_CA30_005
7) Remove the screws of the right panel and then remove the right panel (7 screws) (see CJ_CA30_006).	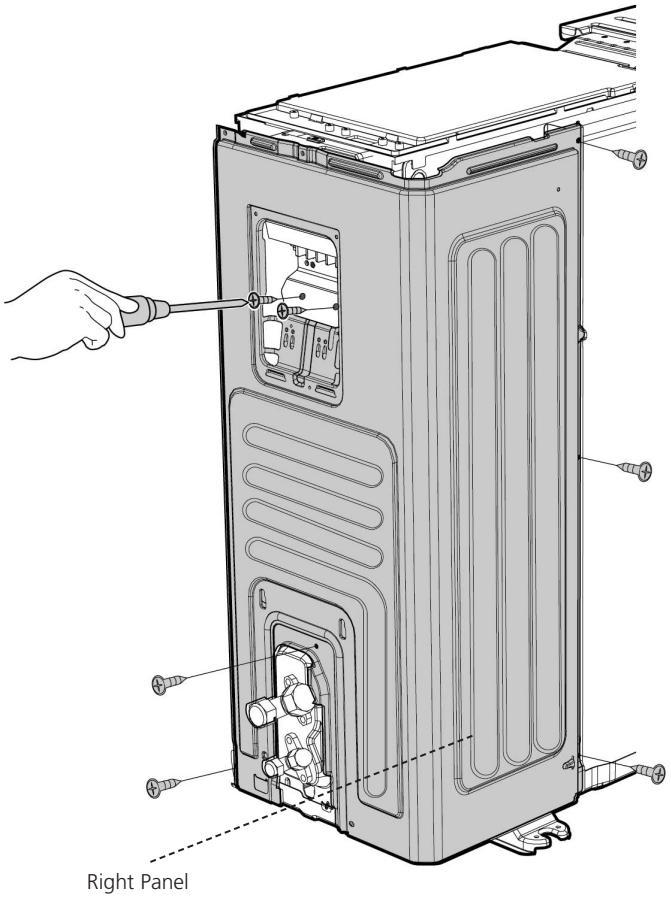 CJ_CA30_006

Note: This section is for reference only. Actual unit appearance may vary.

4. D30

Procedure	Illustration
1) Turn off the air conditioner and the power breaker. 2) Remove the screws of the big handle and then remove the big handle (2 screws) (see CJ_D30_001).	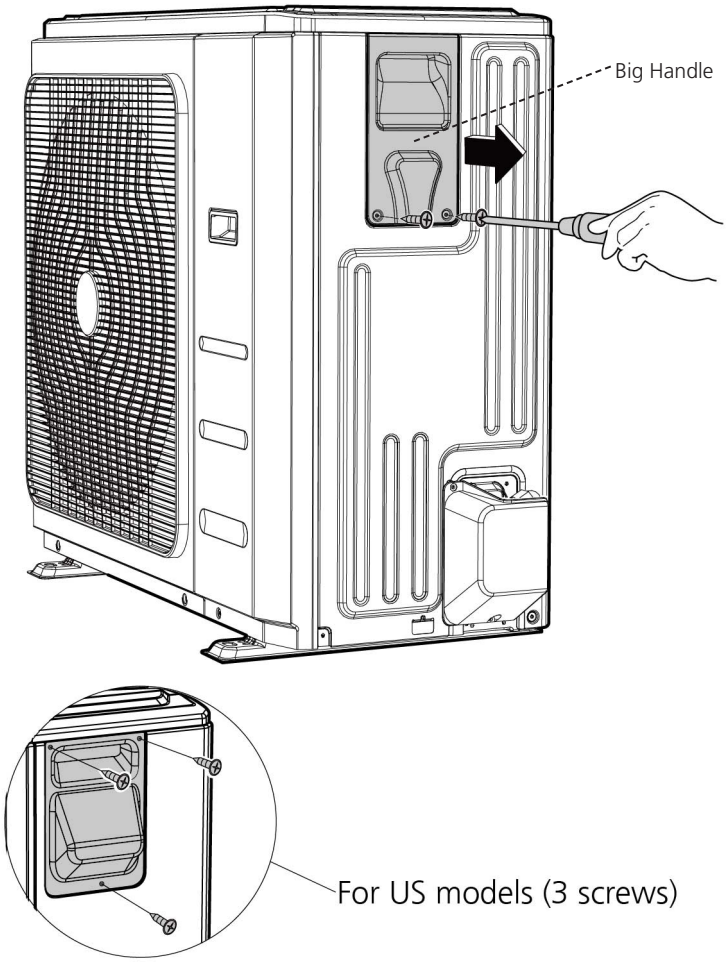 **CJ_D30_001**
3) Remove the screws of the top cover and then remove the top cover (4 screws). Two of the screws is located underneath the big handle (see CJ_ D30_002).	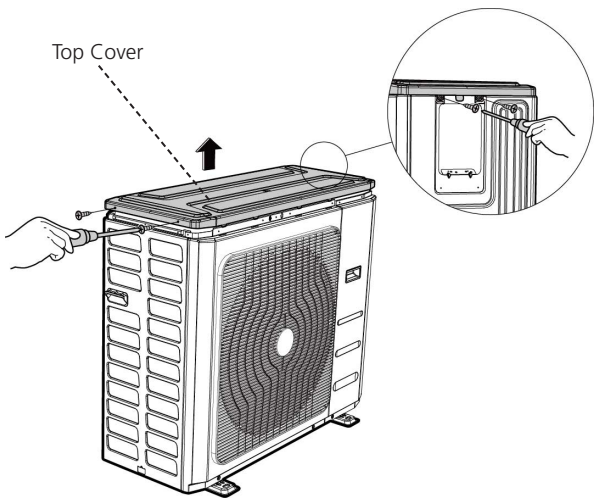 **CJ_D30_002**

Note: This section is for reference only. Actual unit appearance may vary.

Procedure	Illustration
4) Remove the screws of the front right panel and then remove the front right panel (2 screws) (see CJ_D30_003).	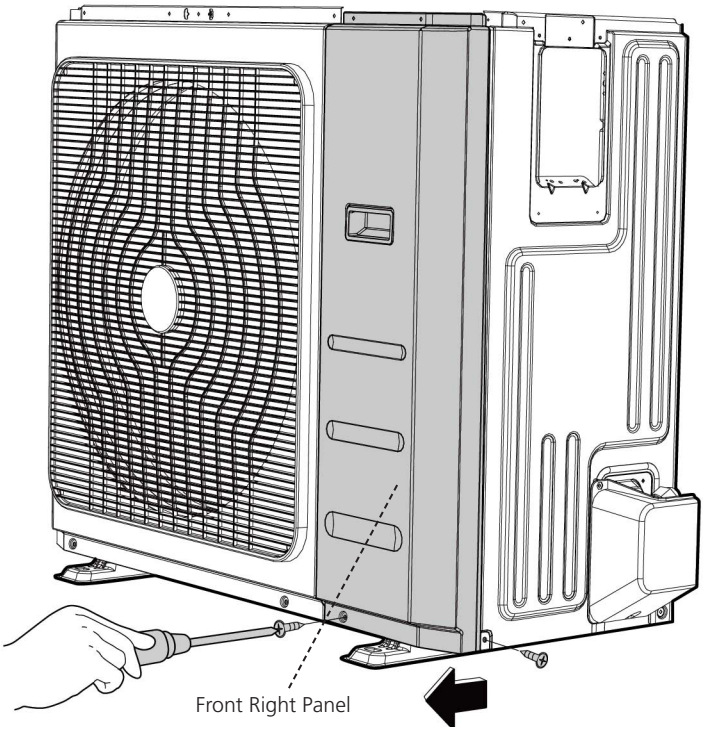 **CJ_D30_003**
5) Remove the screws of the front panel and then remove the front panel (9 screws) (see CJ_D30_004).	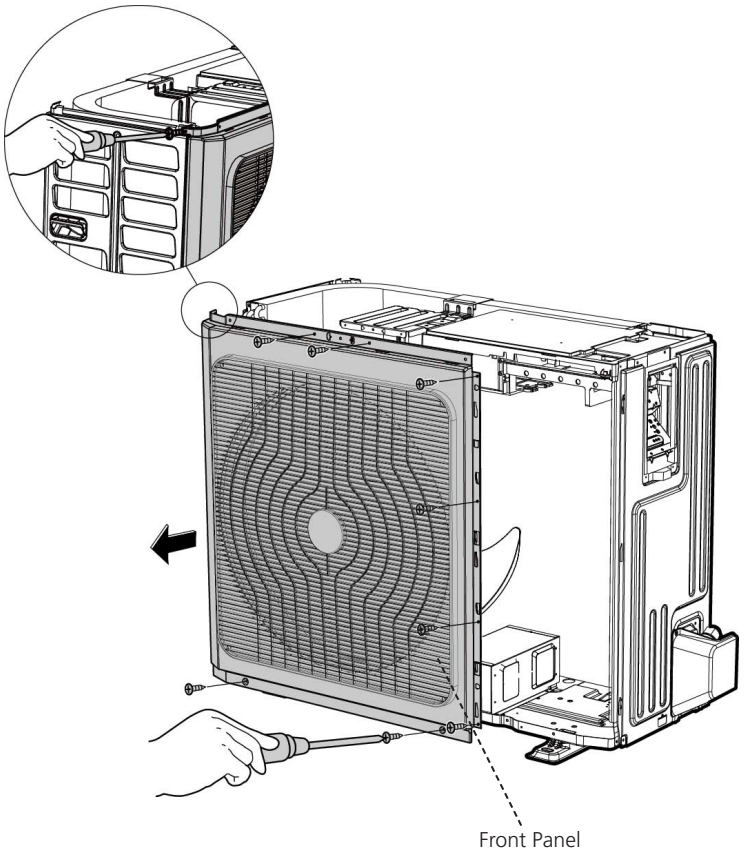 **CJ_D30_004**

Note: This section is for reference only. Actual unit appearance may vary.

Procedure	Illustration
6) Remove the screws of water collecting cover and then remove the water collecting cover (2 screws) (see CJ_D30_005).	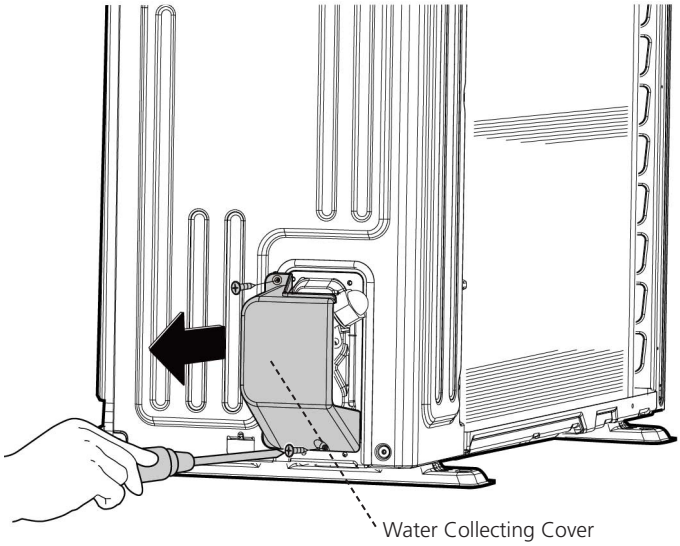 **CJ_D30_005**
7) Remove the screws of the rear net and then remove the rear net (2 screws) (see CJ_D30_006). (for some models)	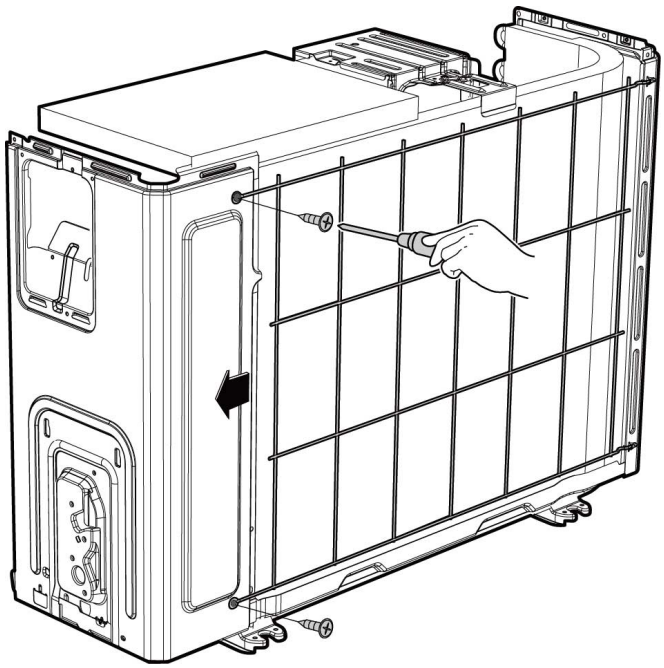 **CJ_D30_006**

Note: This section is for reference only. Actual unit appearance may vary.

Procedure	Illustration
8) Remove the screws of the right panel and then remove the right panel (8 screws) (see CJ_D30_007).	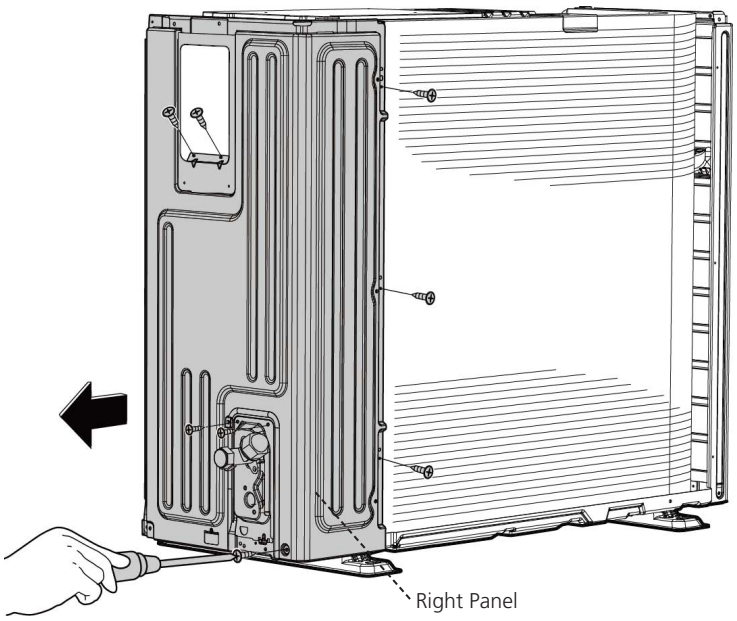 CJ_D30_007

Note: This section is for reference only. Actual unit appearance may vary.

5. X230/X330

Procedure	Illustration
1) Turn off the air conditioner and the power breaker. 2) Remove the screw of the big handle and then remove the big handle (1 screws) (see CJ_X230_001).	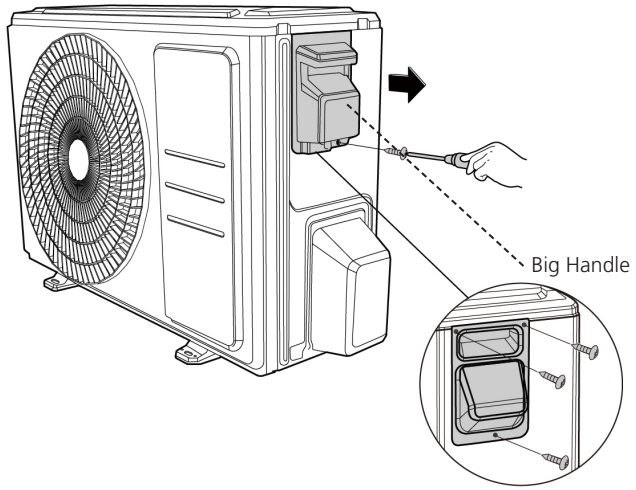 **CJ_X230_001**
3) Remove the screws of the top cover and then remove the top cover (4 screws). One of the screws is located underneath the big handle (see CJ_X230_002).	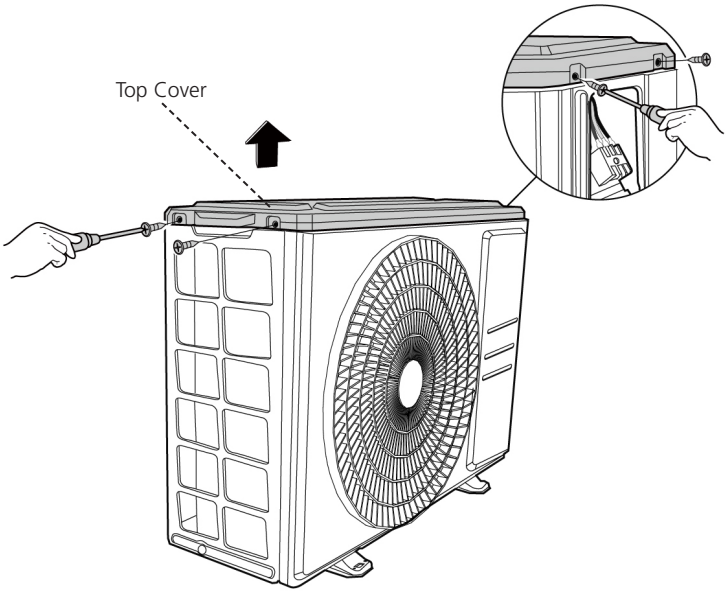 **CJ_X230_002**

Note: This section is for reference only. Actual unit appearance may vary.

Procedure	Illustration
4) Remove the screws of water collecting cover and then remove the water collecting cover (2 screws) (see CJ_X230_003).	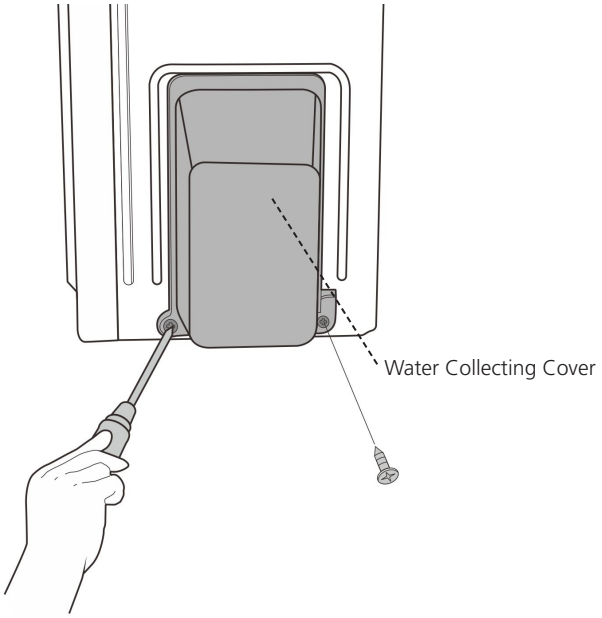 **CJ_X230_003**
5) Remove the screws of the front panel and then remove the front panel (7 screws(onoff models) or 9 screws(inverter models) (see CJ_X230_004).	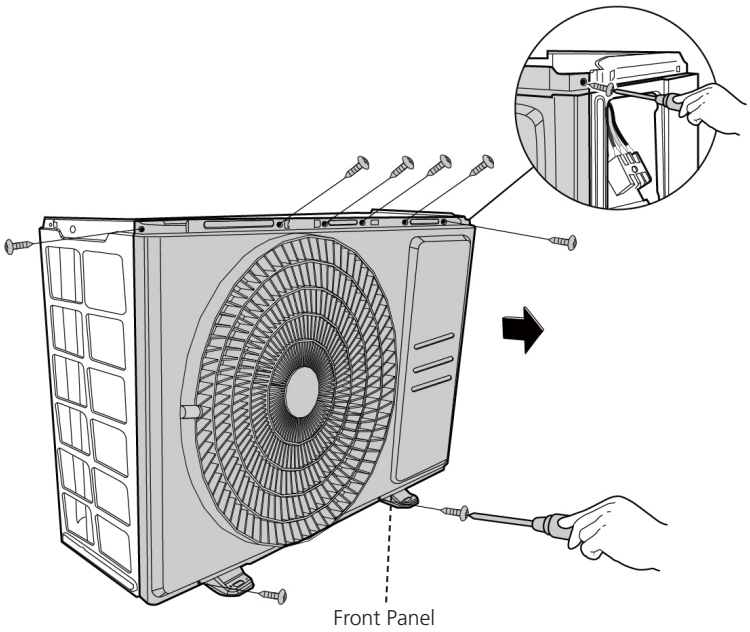 **CJ_X230_004**

Note: This section is for reference only. Actual unit appearance may vary.

Procedure	Illustration
6) Remove the screws of the right panel and then remove the right panel (5 screws) (see CJ_X230_005).	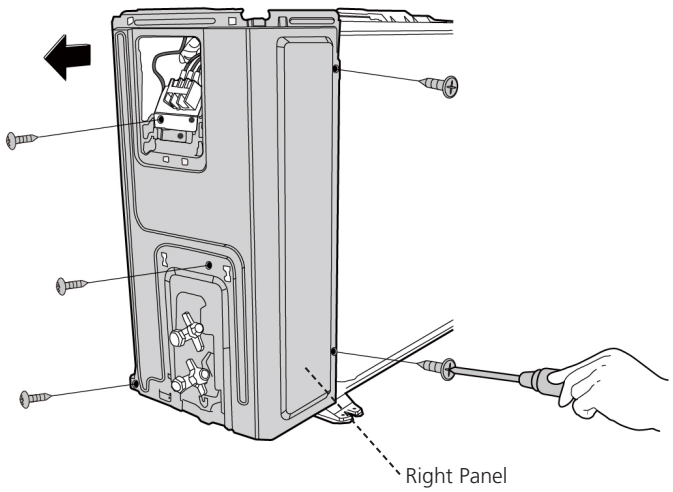 **CJ_X230_005**

Note: This section is for reference only. Actual unit appearance may vary.

6.X430

Procedure	Illustration
1) Turn off the air conditioner and the power breaker. 2) Remove the screw of the big handle and then remove the big handle (1 screw) (see CJ_X430_001).	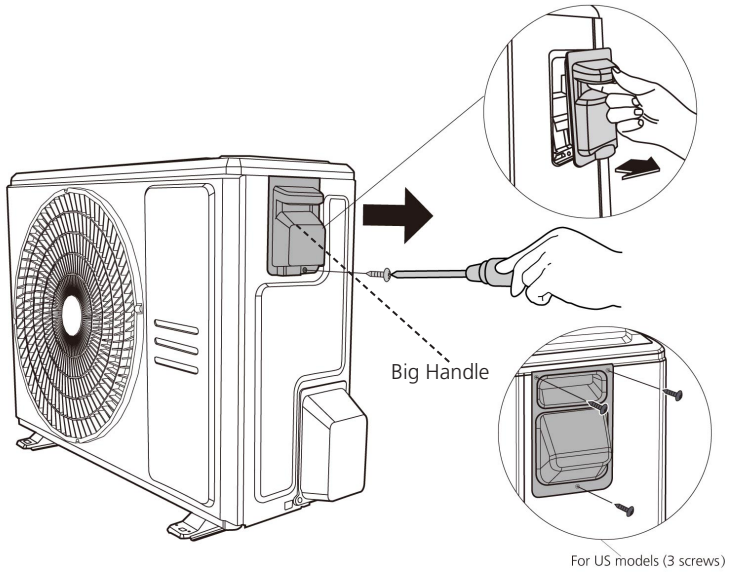 **CJ_X430_001**
3) Remove the screws of the top cover and then remove the top cover (3 screws). One of the screws is located underneath the big handle (see CJ_X430_002).	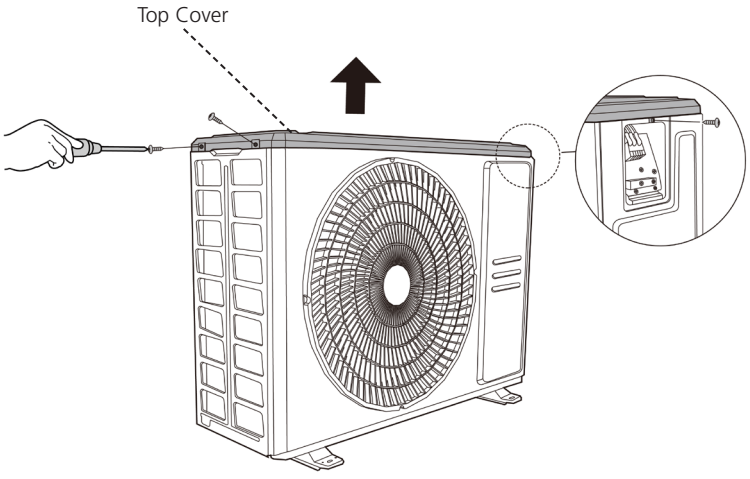 **CJ_X430_002**

Note: This section is for reference only. Actual unit appearance may vary.

Procedure	Illustration
4) Remove the screws of water collecting cover and then remove the water collecting cover (2 screws) (see CJ_X430_003).	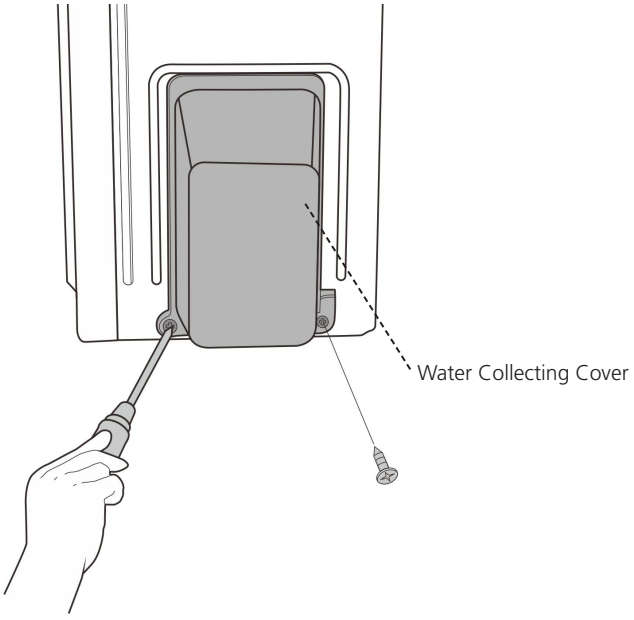 CJ_X430_003
5) Remove the screws of the front panel and then remove the front panel (7 screws(onoff models) or 9 screws(inverter models) (see CJ_X430_004).	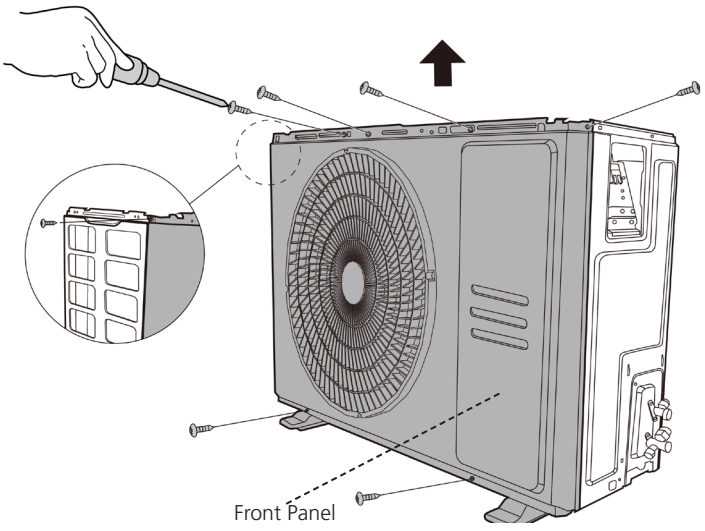 CJ_X430_004

Note: This section is for reference only. Actual unit appearance may vary.

Procedure	Illustration
6) Remove the screws of the right panel and then remove the right panel (6 screws) (see CJ_X430_005).	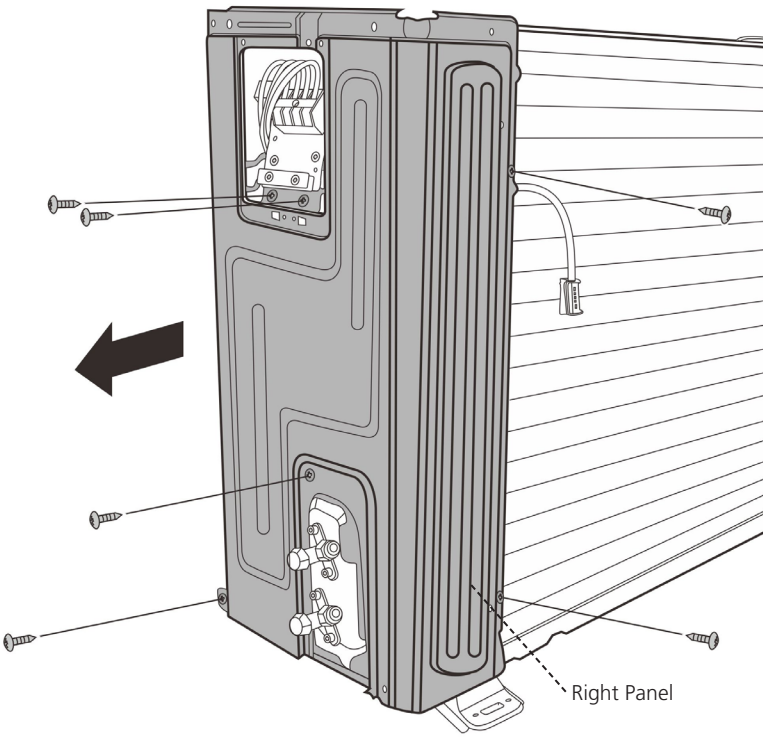 **CJ_X430_005**

Note: This section is for reference only. Actual unit appearance may vary.

6. E30/590

Procedure	Illustration
1) Turn off the air conditioner and the power breaker. 2) Remove the screws of the big handle and then remove the big handle (2 screws) (see CJ_E30_001).	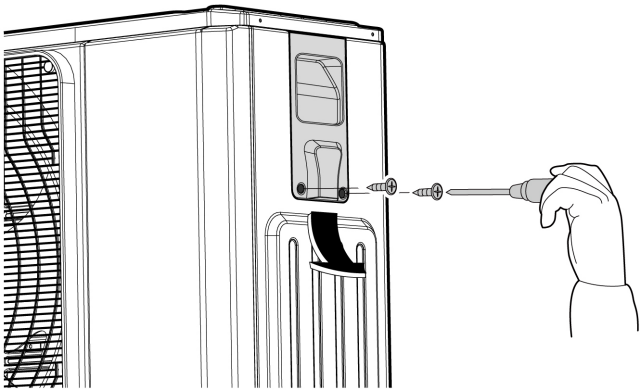 CJ_E30_001
3) Remove the screws of the top cover and then remove the top cover (4 screws). Two of the screws is located underneath the big handle (see CJ_E30_002).	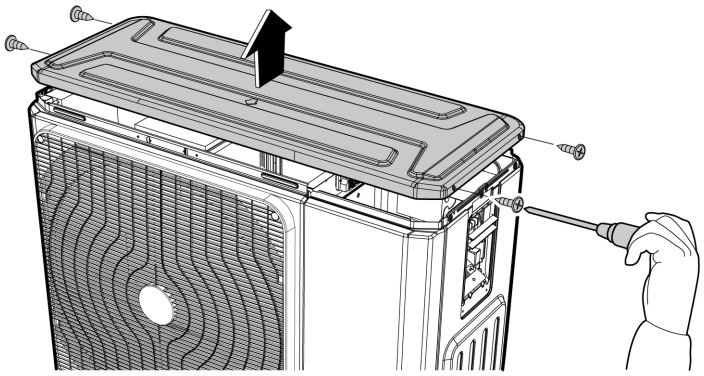 CJ_E30_002
4) Remove the screws of water collecting cover and then remove the water collecting cover (2 screw) (see CJ_E30_003).	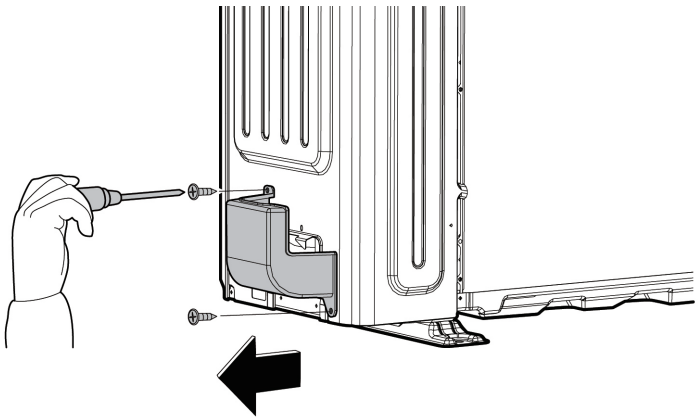 CJ_E30_003

Note: This section is for reference only. Actual unit appearance may vary.

Procedure	Illustration
5) Remove the screws of the front right panel and then remove the front right panel (2 screws) (see CJ_E30_004).	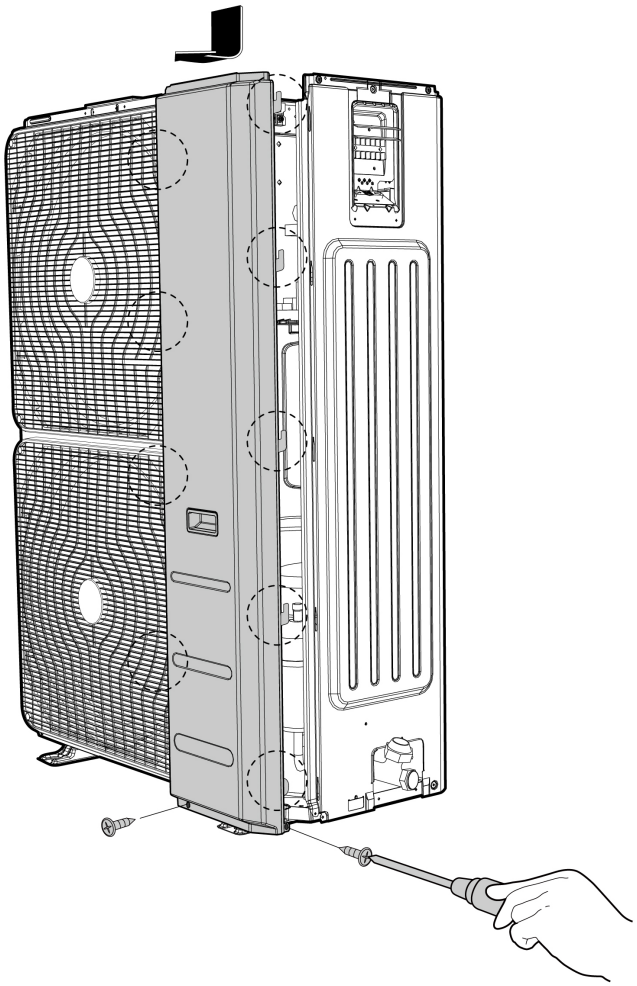 CJ_E30_004

Note: This section is for reference only. Actual unit appearance may vary.

Procedure	Illustration
1) Remove the screws of the front panel and then remove the front panel (7 screws) (see CJ_E30_005).	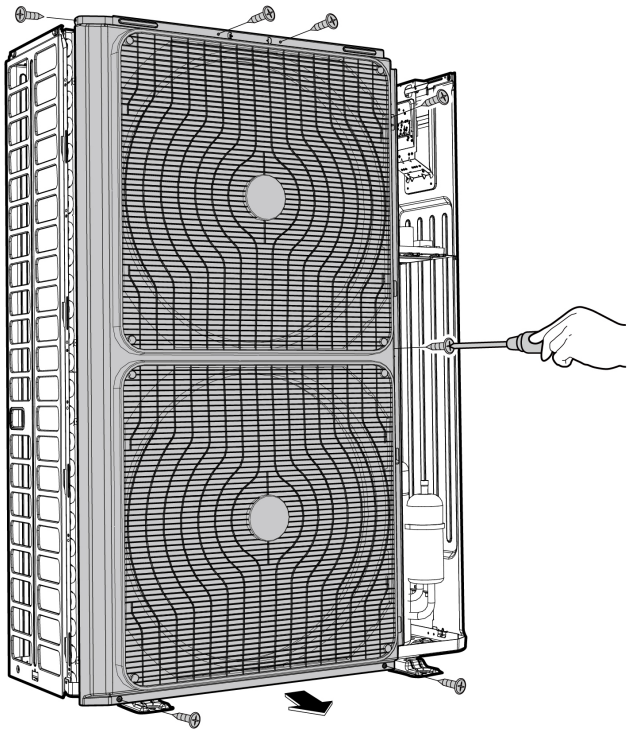 CJ_E30_005
2) Remove the screws of the right panel and then remove the right panel (10 screws) (see CJ_E30_006).	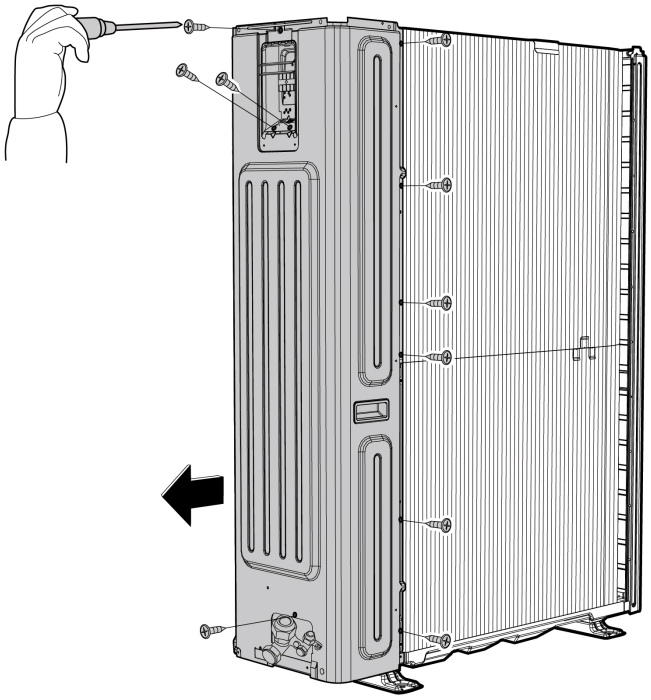 CJ_E30_006

Note: This section is for reference only. Actual unit appearance may vary.

2.2 Electrical parts

WARNING: Antistatic gloves must be worn when you disassemble the electronic box.

Note: Remove the air outlet grille(refer to 3.1 Panel Plate) before disassembling electrical parts.

i) PCB for ON-OFF Models

1. PCB board 1

Procedure	Illustration
1) Remove the two screws fixed the electronic control board (see CJ_ODU_PCB_001). 2) Disconnect the connectors for fan motor. (Blue wire, yellow wire, red wire, brown wire and black wire. The blue wire and red wire are on the capacitor. The black wire connects with terminal 4.) (see CJ_ODU_PCB_001) 3) Disconnect the wires connected to the compressor. (Black wire connects with terminal 1,blue wire and red wire connect with the compressor capacitor) (see CJ_ODU_PCB_001) 4) Disconnect the wires connected to 4-way valve.(Blue wires on terminal 2&3) (see CJ_ODU_PCB_001) 5) Remove the fixing screw of the compressor capacitor, then pull it out (see CJ_ODU_PCB_001) 6) Remove the electrical parts (see CJ_ODU_PCB_001) 7) For models with AC conductor, remove 2 screws of it showed in the figure.	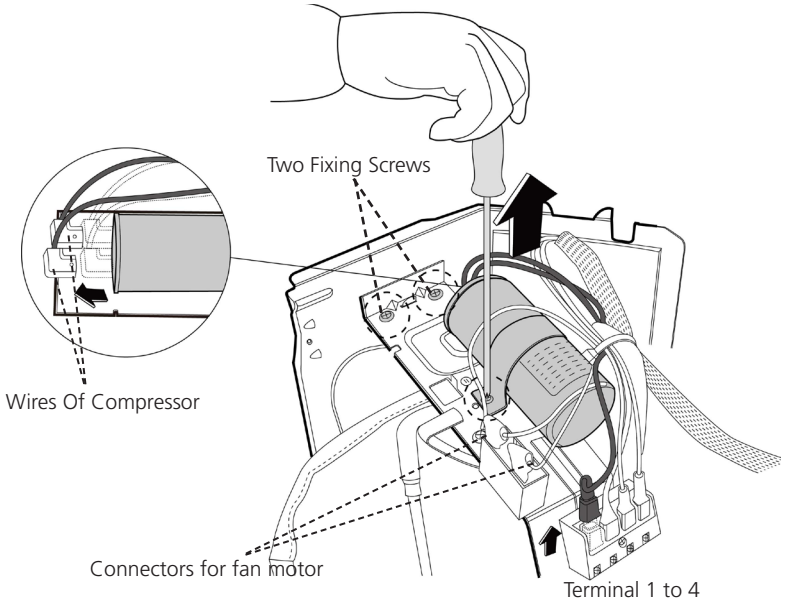 **CJ_ODU_PCB_001-01** 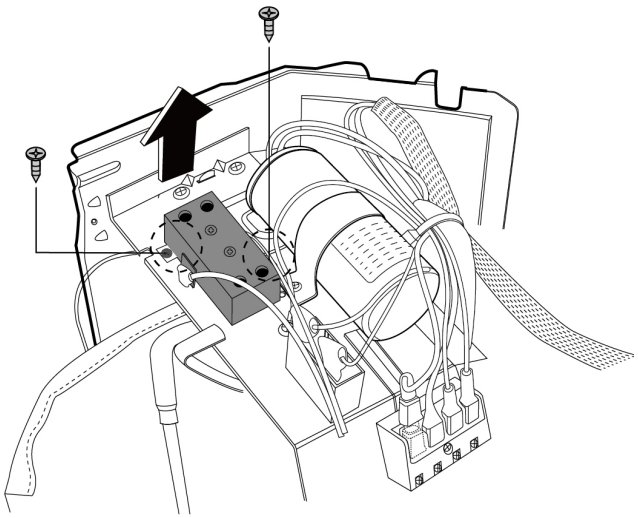 **CJ_ODU_PCB_001-02**

Note: This section is for reference only. Actual unit appearance may vary.

Procedure	Illustration
8) For models with subzero refrigeration control board, remove 3 screws of it showed in the figure.	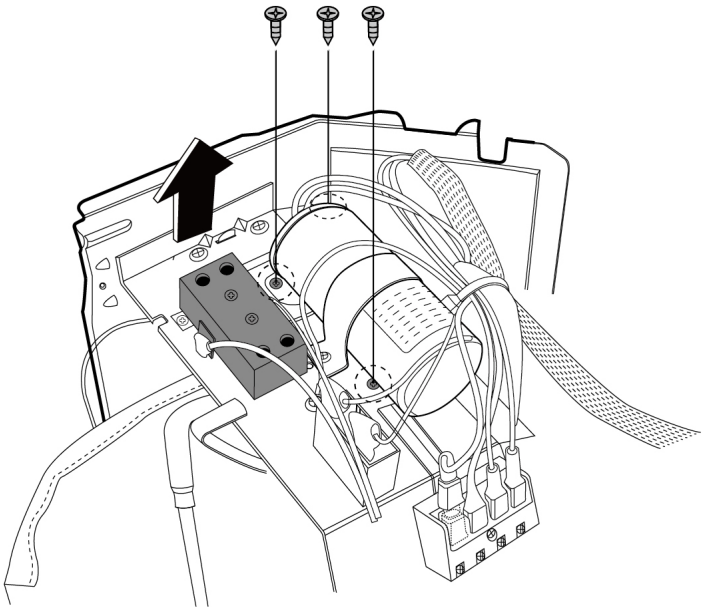 CJ_ODU_PCB_001-03
9) The subzero refrigeration control board is in the back of the medal sheet.	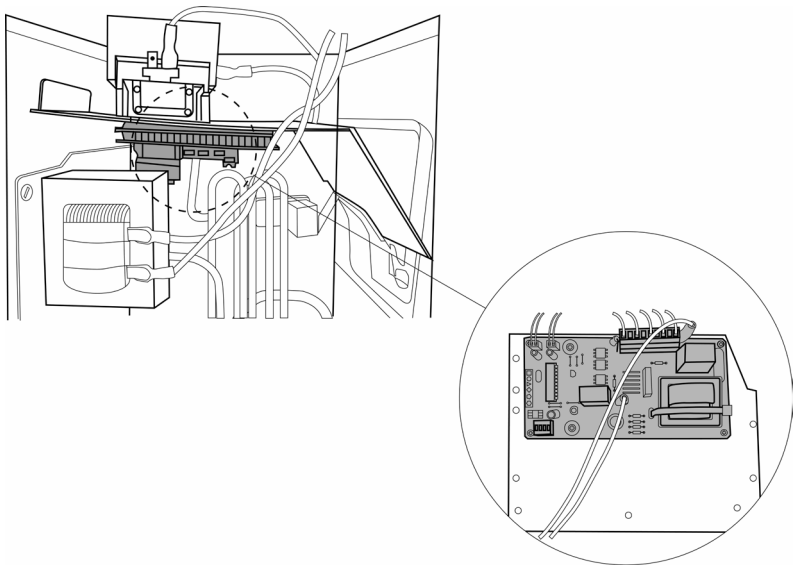 CJ_ODU_PCB_001-04

Note: This section is for reference only. Actual unit appearance may vary.

2. PCB board 2

Procedure	Illustration
1) Disconnect the power transformer (see CJ_ODU_010) 2) Disconnect the wires connected to terminals. (see CJ_ODU_010) 3) Disconnect the wires connected to contactor. (see CJ_ODU_010) 4) Disconnect the wires connected to T3/T4 sensor. (see CJ_ODU_010)	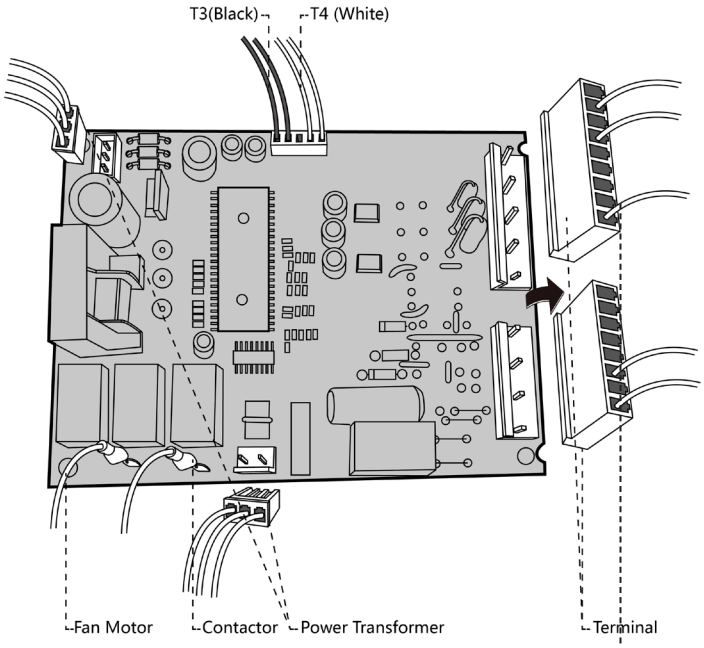 **CJ_ODU_PCB_002-1**

Note: This section is for reference only. Actual unit appearance may vary.

3. PCB board 3

Procedure	Illustration
1) Disconnect the wires connected to the transformer. (see CJ_ODU_PCB_003-1) 2) Disconnect the wires connected to high/low pressure switch. (see CJ_ODU_PCB_003-1 3) Disconnect the wires connected to indoor unit. (see CJ_ODU_PCB_003-1) 4) Disconnect the wires connected to AC contactor. (see CJ_ODU_PCB_003-1)	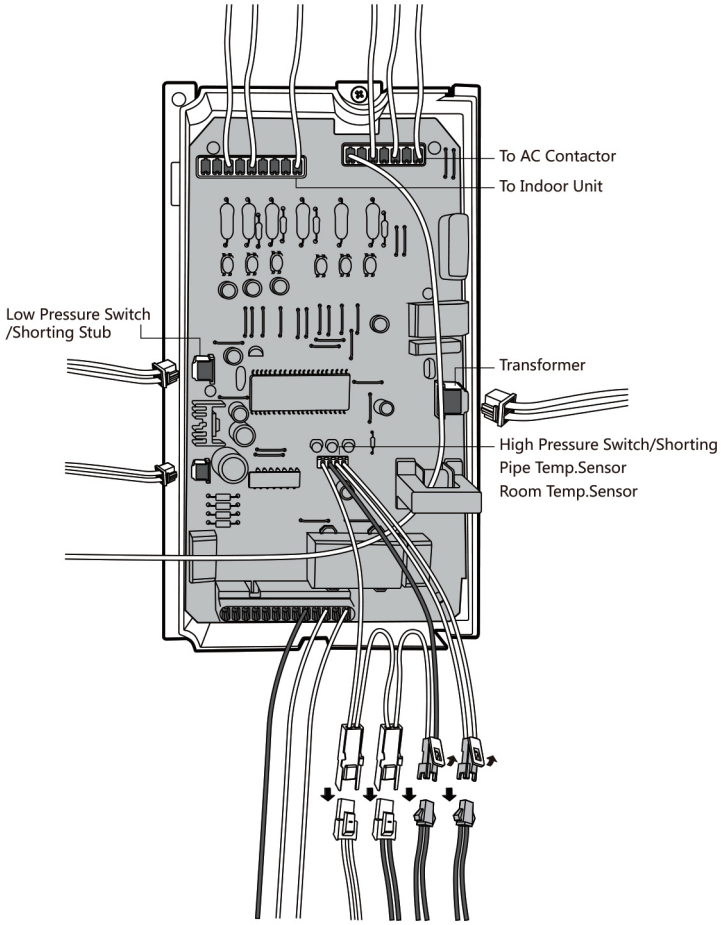 **CJ_ODU_PCB_003-1**
5) Remove the screws of the capacitor and then remove it (1 screw for each capacitor). (see CJ_ODU_PCB_003-2)	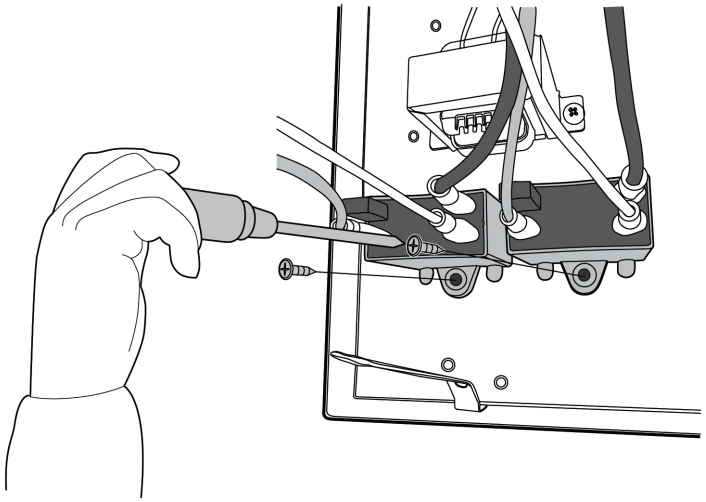 **CJ_ODU_PCB_003-2**

Note: This section is for reference only. Actual unit appearance may vary.

Procedure	Illustration
6) Remove the 1 screw of the AC contactor and then remove it. (see CJ_ODU_PCB_003-3)	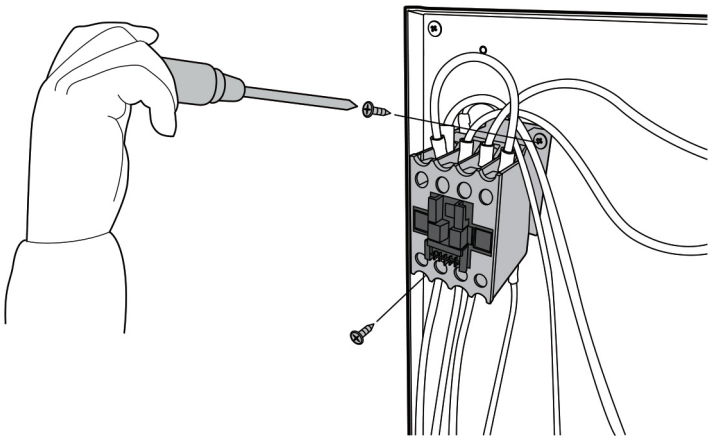 CJ_ODU_PCB_003-3
7) Remove 2 screws of the transformer and then remove it. (see CJ_ODU_ PCB_003-4)	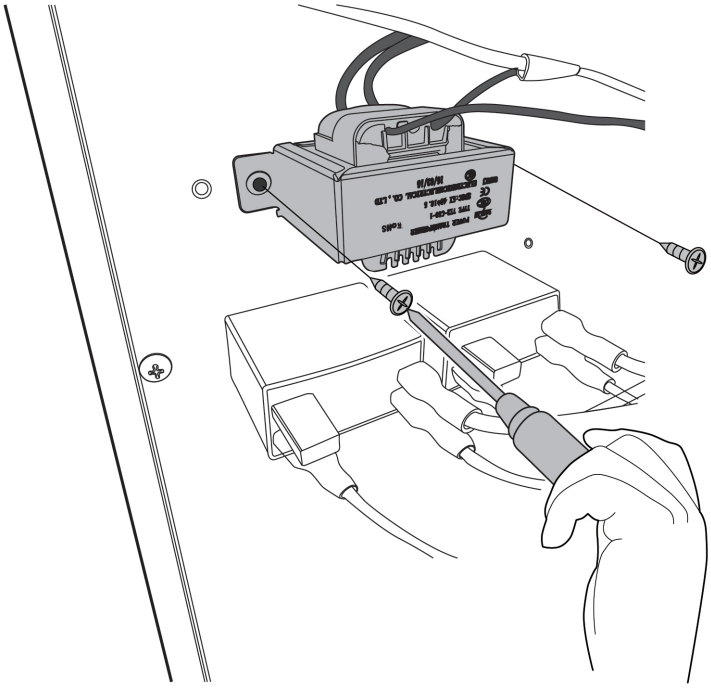 CJ_ODU_PCB_003-4

Note: This section is for reference only. Actual unit appearance may vary.

4. PCB board 14

Procedure	Illustration
1) Remove the fixing screw of the compressor capacitor, then pull it out (see CJ_ODU_PCB_014-1) 2) Remove 2 screws of the transformer and then remove it. (see CJ_ODU_PCB_014-1) 3) Remove the fixing screw of the fan motor capacitor, then remove it. (see CJ_ODU_PCB_014-1) 4) Remove the 4 screws of the electronic installing box and then remove it. (see CJ_ODU_PCB_014-1) (for some models) 5) Remove the 2 screws of the AC contactor and then remove it. (see CJ_ODU_PCB_014-2)	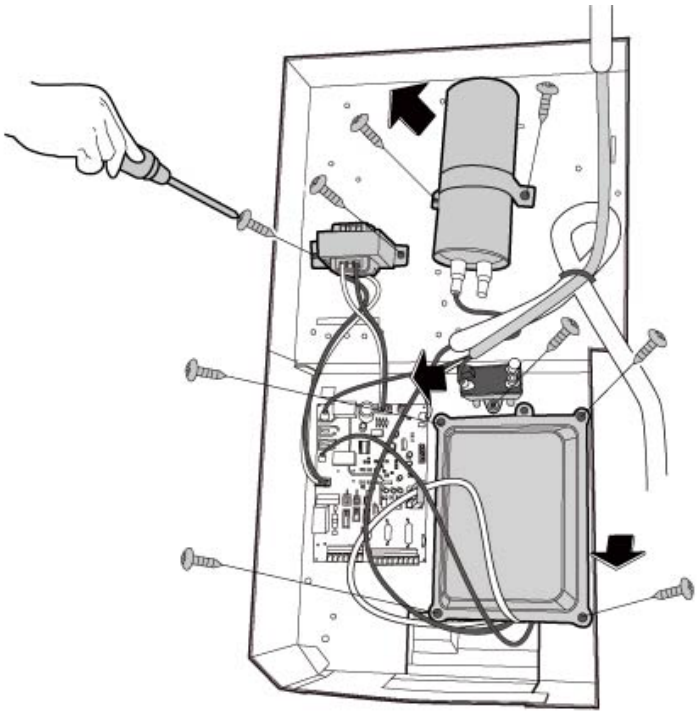 CJ_ODU_PCB_014-1 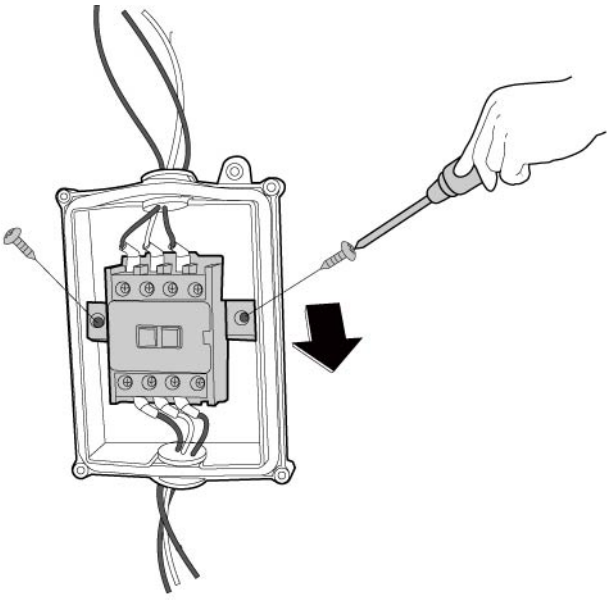 CJ_ODU_PCB_014-2

Note: This section is for reference only. Actual unit appearance may vary.

Procedure	Illustration
6) Disconnect the power transformer (see CJ_ODU_014-3) 7) Disconnect the wires connected to terminals. (see CJ_ODU_014-3) 8) Disconnect the wires connected to contactor. (see CJ_ODU_014-3) 9) Disconnect the wires connected to T3/T4 sensor. (see CJ_ODU_014-3)	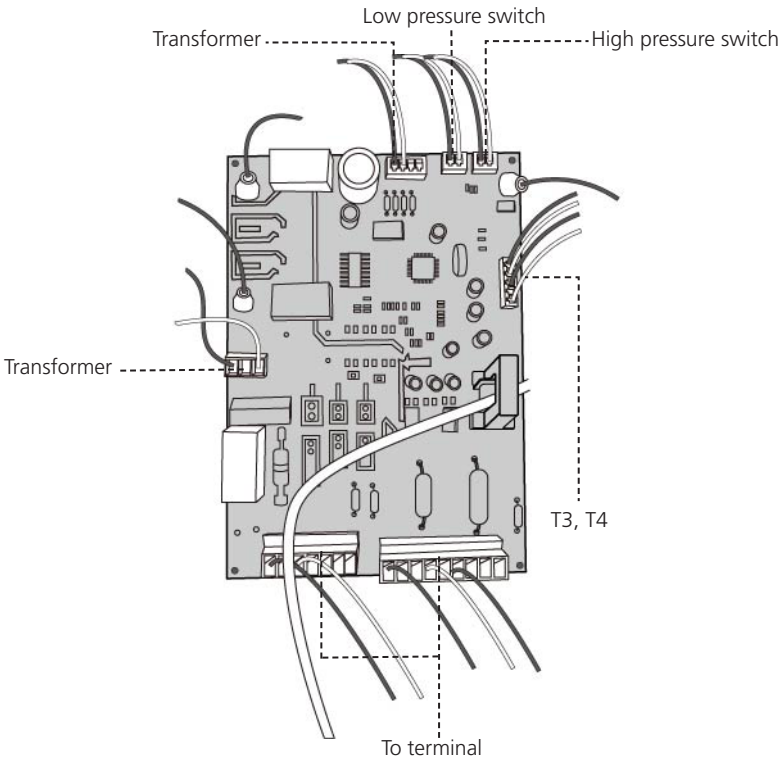 **CJ_ODU_PCB_014-3**

Note: This section is for reference only. Actual unit appearance may vary.

5. PCB board 15

Procedure	Illustration
1) Remove the 5 screws of the electronic installing box and then remove it. (see CJ_ODU_PCB_015-1)(for some models)	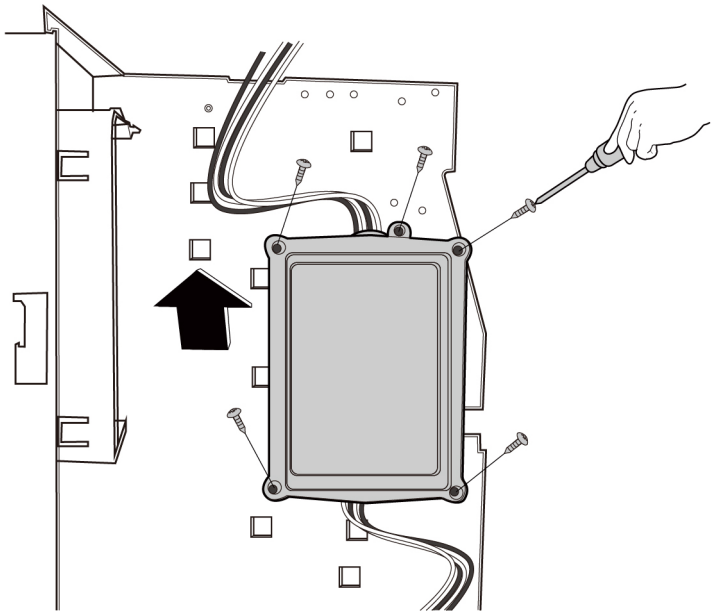 CJ_ODU_PCB_015-1
2) Remove the 2 screws of the AC contactor and then remove it. (see CJ_ODU_PCB_015-2)	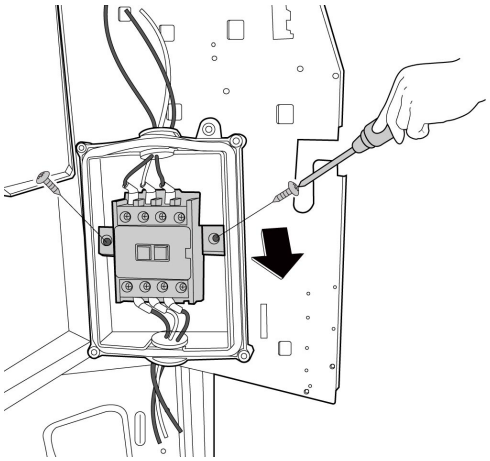 CJ_ODU_PCB_015-2
3) Remove the screws of the capacitor and then remove it (1 screw for each capacitor). (see CJ_ODU_PCB_015-3)	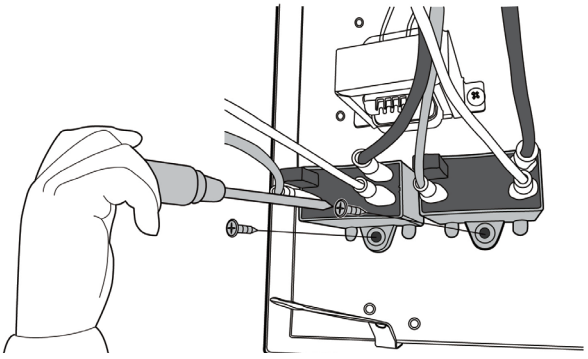 CJ_ODU_PCB_015-3

Note: This section is for reference only. Actual unit appearance may vary.

Procedure	Illustration
4) Remove 2 screws of the transformer and then remove it. (see CJ_ODU_PCB_015-4)	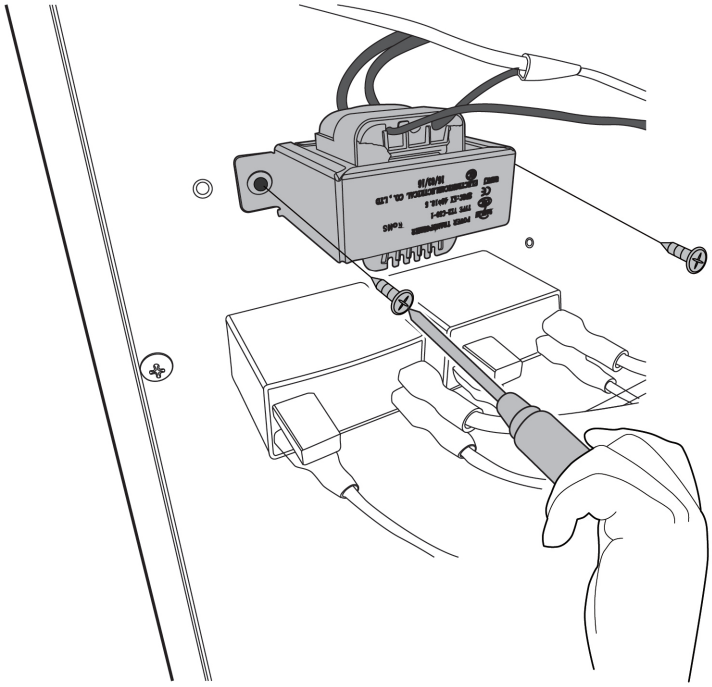 CJ_ODU_PCB_015-4
5) Disconnect the wires connected to the transformer. (see CJ_ODU_PCB_015-5) 6) Disconnect the wires connected to high/low pressure switch. (see CJ_ODU_PCB_015-5) 7) Disconnect the wires connected to T3/T4 sensor. (see CJ_ODU_015-5) 8) Disconnect the wires connected to terminal. (see CJ_ODU_PCB_015-5)	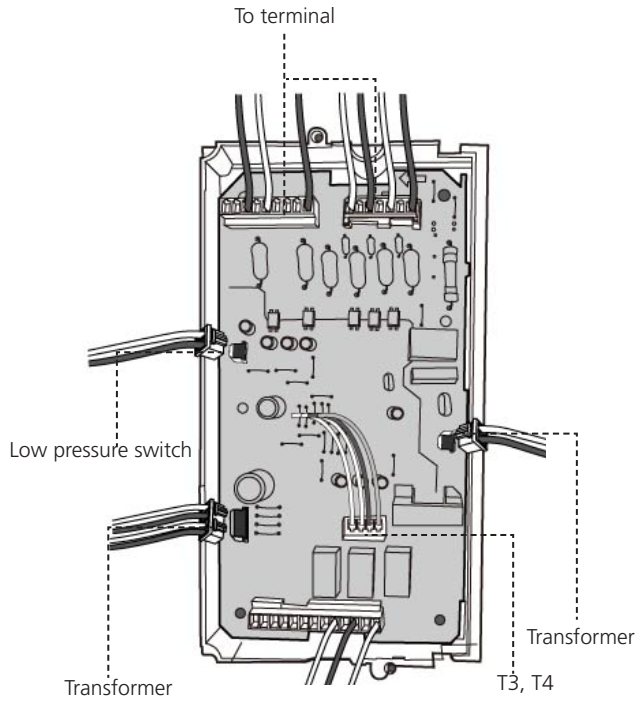 CJ_ODU_PCB_015-5

Note: This section is for reference only. Actual unit appearance may vary.

ii) PCB for Inverter Models

6. PCB board 4

Procedure	Illustration
1) Remove the screws of the top cover. (2 screws) (see CJ_ODU_PCB_004-1).	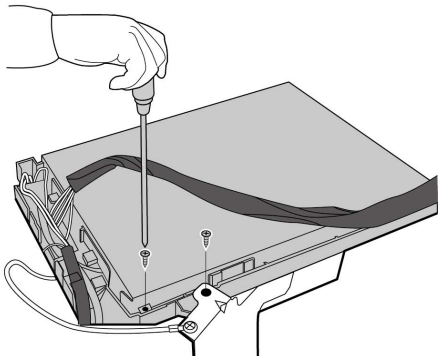 CJ_ODU_PCB_004-1
2) Unfix the hooks and then open the electronic control box cover (4 hooks) (see CJ_ODU_PCB_004-2).	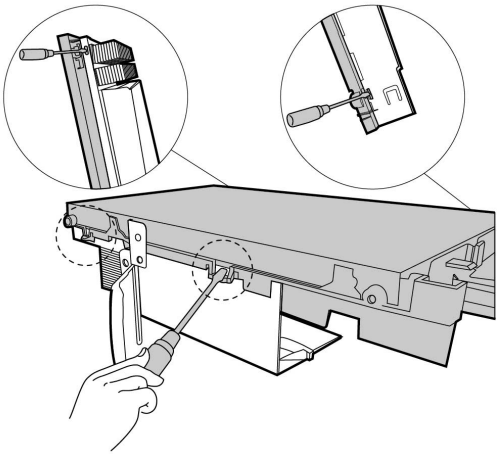 CJ_ODU_PCB_004-2
3) Disconnect the connector for fan motor from the electronic control board (see CJ_ODU_PCB_004-3). 4) Remove the connector for the compressor (see CJ_ODU_PCB_004-3). 5) Pull out the two blue wires connected with the four way valve (CJ_ODU_PCB_004-3). 6) Pull out connectors of the condenser coil temp. sensor(T3),outdoor ambient temp. sensor(T4) and discharge temp. sensor(TP) (CJ_ODU_PCB_004-3). 7) Disconnect the electronic expansion valve wire (CJ_ODU_PCB_004-3). 8) Then remove the electronic control board.	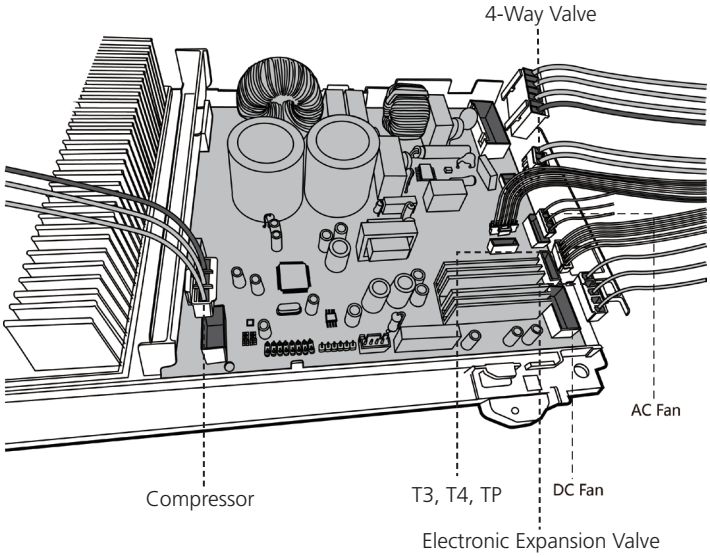 CJ_ODU_PCB_004-3

Note: This section is for reference only. Actual unit appearance may vary.

7. PCB board 5

Procedure	Illustration
1) Unfix the hooks and then open the electronic control box cover (4 hooks) (see CJ_ODU_PCB_005-1).	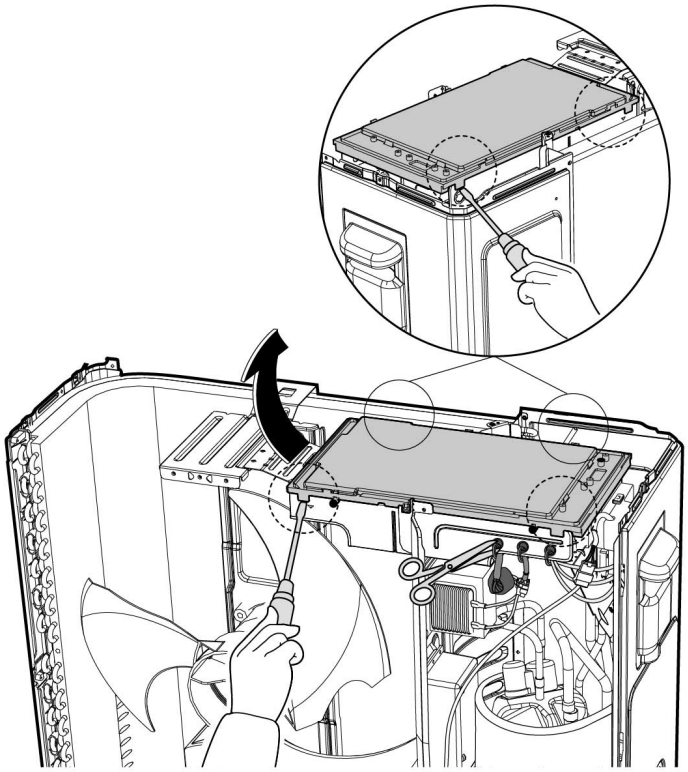 CJ_ODU_PCB_005-1
2) Disconnect the connector for fan motor from the electronic control board (see CJ_ODU_PCB_005-2). 3) Remove the connector for the compressor (see CJ_ODU_PCB_005-2). 4) Pull out the two blue wires connected with the four way valve (see CJ_ODU_PCB_005-2). 5) Pull out connectors of the condenser coil temp. sensor(T3),outdoor ambient temp. sensor(T4) and discharge temp. sensor(TP) (see CJ_ODU_PCB_005-2). 6) Disconnect the electronic expansion valve wire (see Fig CJ_ODU_PCB_005-2). 7) Then remove the electronic control board.	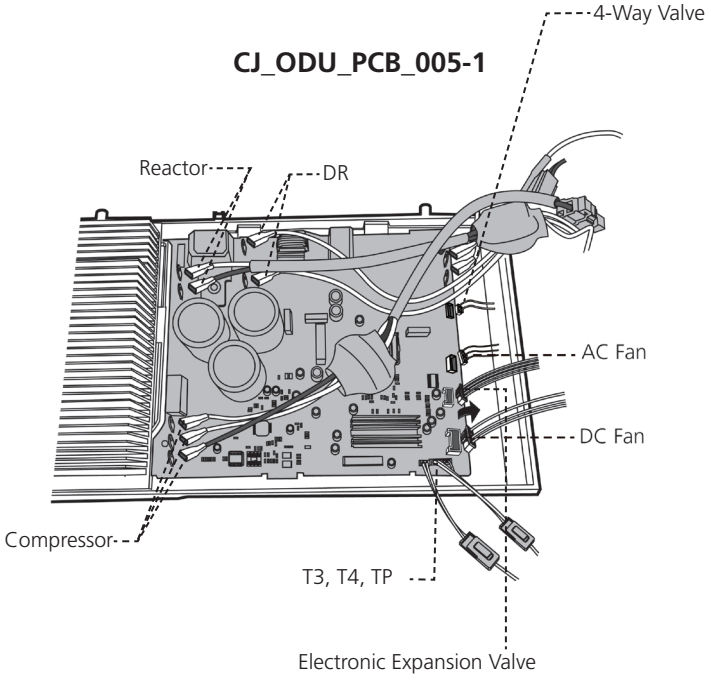 CJ_ODU_PCB_005-2

Note: This section is for reference only. Actual unit appearance may vary.

8. PCB board 6

Procedure	Illustration
1) Remove the screws and unfix the hooks, then open the electronic control box cover (5 screws and 2 hooks)(see CJ_ODU_PCB_006-1).	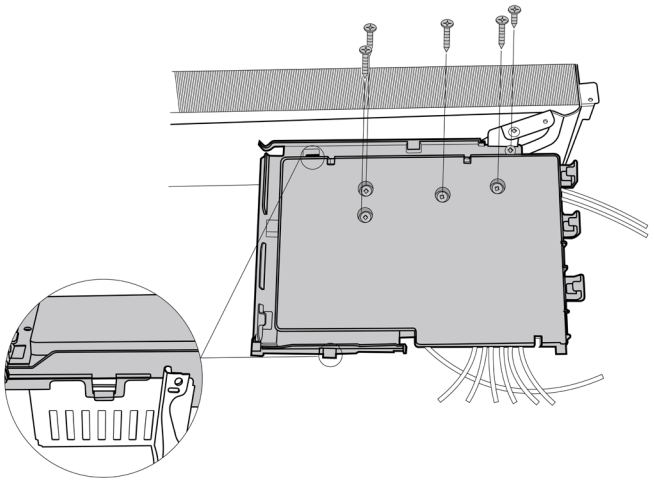 CJ_ODU_PCB_006-1
2) Disconnect the connector for fan motor from the electronic control board (see CJ_ODU_PCB_006-2). 3) Remove the connector for the compressor (see CJ_ODU_PCB_006-2). 4) Pull out the two blue wires connected with the four way valve (see CJ_ODU_PCB_006-2). 5) Pull out connectors of the condenser coil temp. sensor(T3),outdoor ambient temp. sensor(T4) and discharge temp. sensor(TP) (see CJ_ODU_PCB_006-2). 6) Disconnect the electronic expansion valve wire (see Fig CJ_ODU_PCB_006-2). 7) Remove the connector for the DR and reactor (see Fig CJ_ODU_PCB_006-2). 8) Then remove the electronic control board.	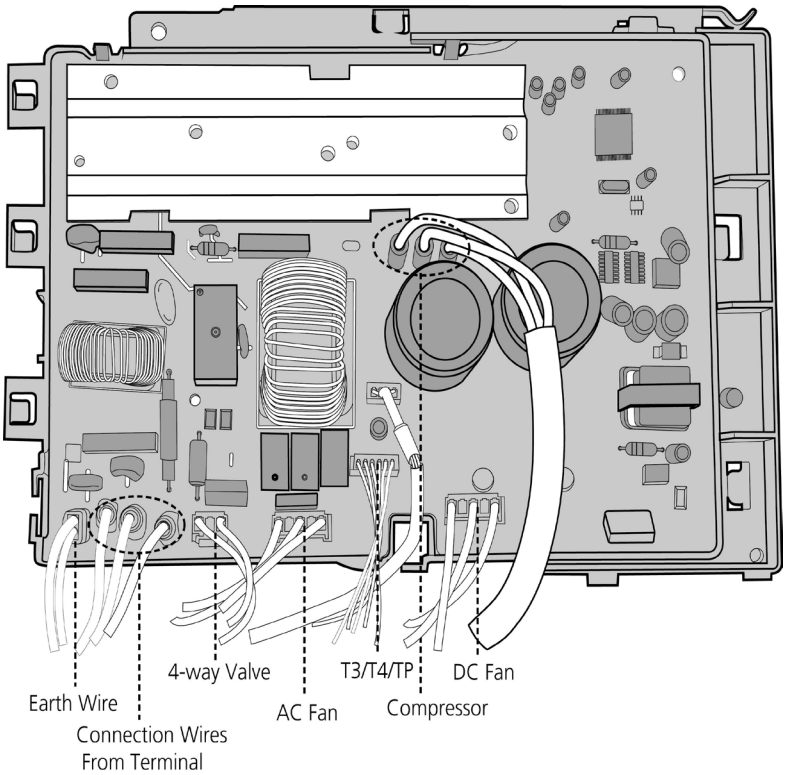 CJ_ODU_PCB_006-2

Note: This section is for reference only. Actual unit appearance may vary.

9. PCB board 7

Procedure	Illustration
1) Remove the screws of the top cover. (1 screws) (see CJ_ODU_PCB_007-1).	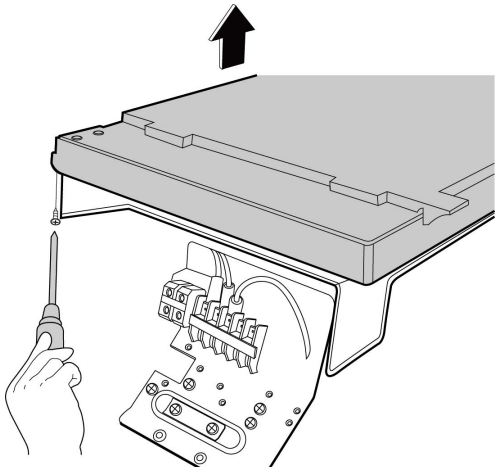 CJ_ODU_PCB_007-1
2) Unfix the hooks and then open the electronic control box cover (5 hooks) (see CJ_ODU_PCB_007-2).	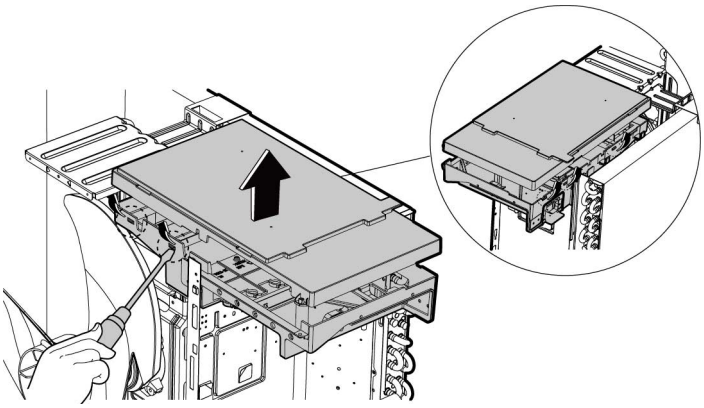 CJ_ODU_PCB_007-2
3) Disconnect the connector for fan motor from the IPM board (see CJ_ODU_PCB_007-3). 4) Remove the connector for the compressor (see CJ_ODU_PCB_007-3).	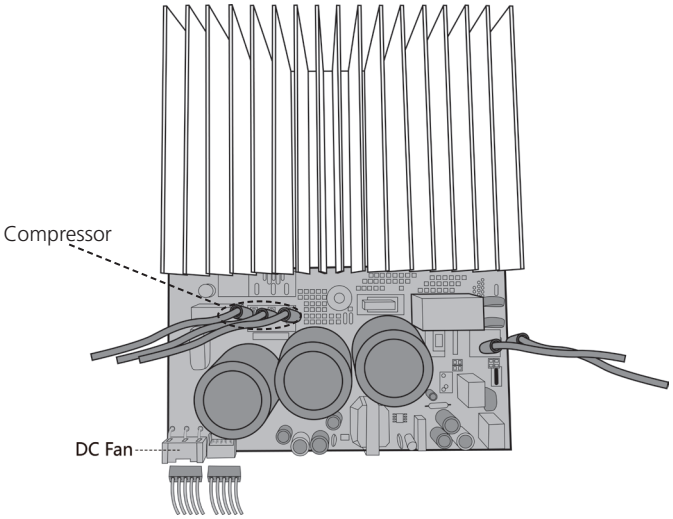 CJ_ODU_PCB_007-3

Note: This section is for reference only. Actual unit appearance may vary.

Procedure	Illustration
5) Pull out the wire connected with the terminal. (see CJ_ODU_PCB_007-4). 6) Pull out connectors of the condenser coil temp. sensor(T3),outdoor ambient temp. sensor(T4) and discharge temp. sensor(TP) (see CJ_ODU_PCB_007-4). 7) Disconnect the electronic expansion valve wire (see Fig CJ_ODU_PCB_007-4). 8) Remove the connector for 4-way valve. (see Fig CJ_ODU_PCB_007-4). 9) Remove the connector for the reactor (see Fig CJ_ODU_PCB_007-4). 10)Then remove the electronic control box (see Fig CJ_ODU_PCB_007-4).	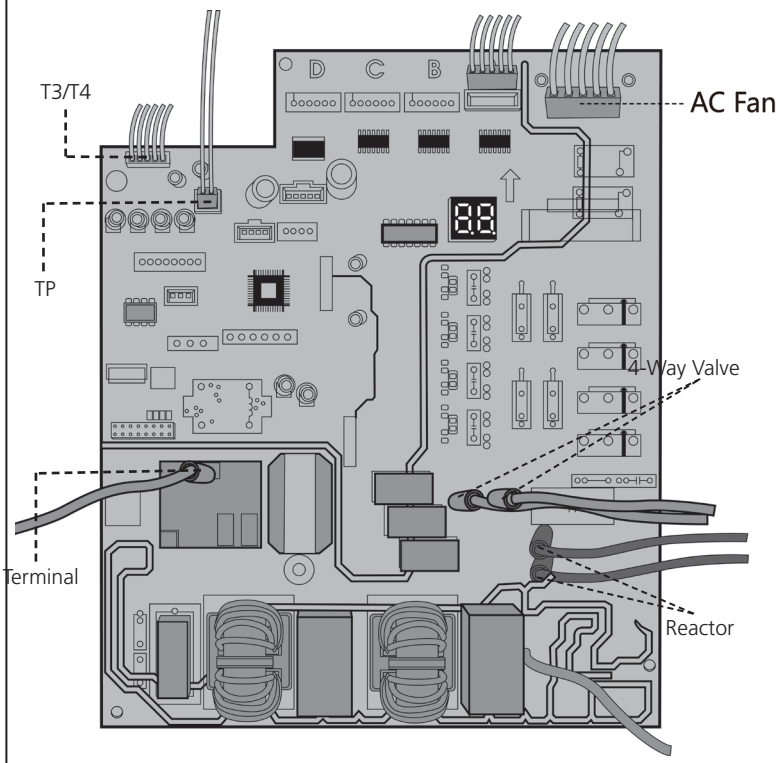 **CJ_ODU_PCB_007-4**

Note: This section is for reference only. Actual unit appearance may vary.

10. PCB board 8

Procedure	Illustration
1) Unfix the hooks and then open the electronic control box cover (4 hooks) (see CJ_ODU_PCB_008-1). 2) Disconnect the connector for outdoor DC fan from the electronic control board (see CJ_ODU_PCB_008-2). 3) Remove the connector for the compressor (see CJ_ODU_PCB_008-2). 4) Pull out the two blue wires connected with the four way valve (see CJ_ODU_PCB_008-2). 5) Pull out connectors of the condenser coil temp. sensor(T3),outdoor ambient temp. sensor(T4) and discharge temp. sensor(TP) (see CJ_ODU_PCB_008-2). 6) Disconnect the electronic expansion valve wire (see Fig CJ_ODU_PCB_008-2). 7) Disconnect the communication wire indoor PCB (see Fig CJ_ODU_PCB_008-2). 8) Disconnect the PFC inductor (see Fig CJ_ODU_PCB_008-2). 9) Then remove the electronic control box (see CJ_ODU_PCB_008-2).	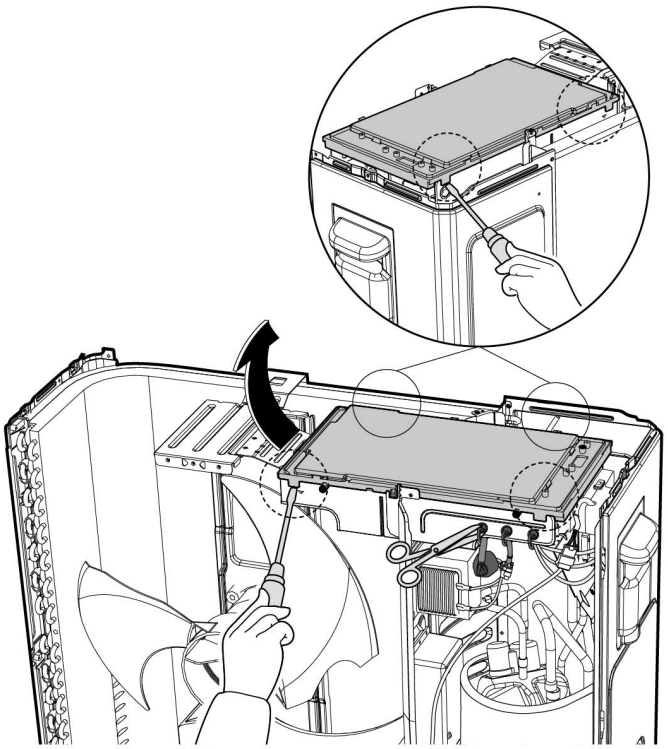 **CJ_ODU_PCB_008-1** 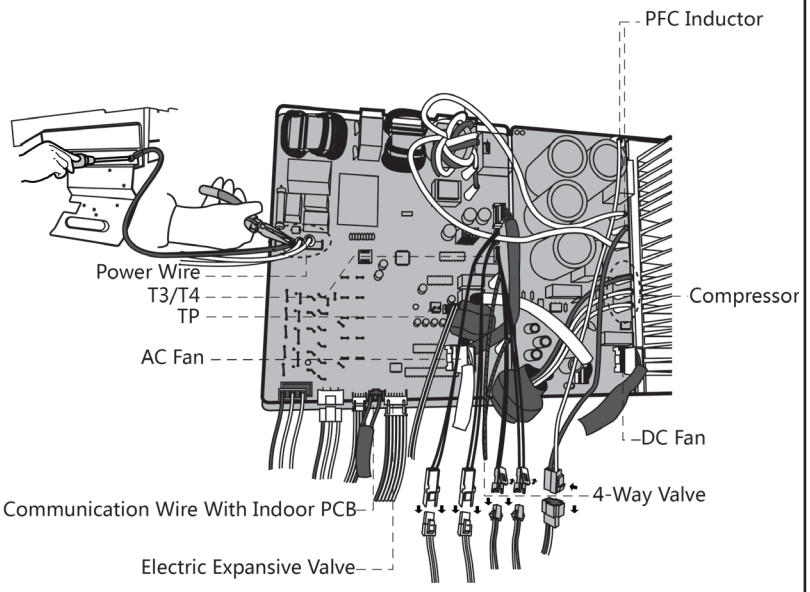 **CJ_ODU_PCB_008-2**

Note: This section is for reference only. Actual unit appearance may vary.

11. PCB board 9

Procedure	Illustration
1) Unfix the hooks and then open the electronic control box cover (4 hooks) (see CJ_ODU_PCB_009-1).	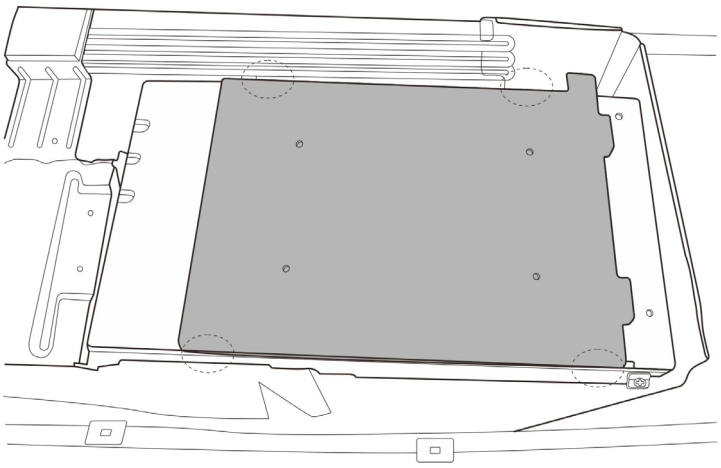 CJ_ODU_PCB_009-1
2) Remove 8 screws on the electronic control board and then turn over the electronic control board (see CJ_ODU_PCB_009-2).	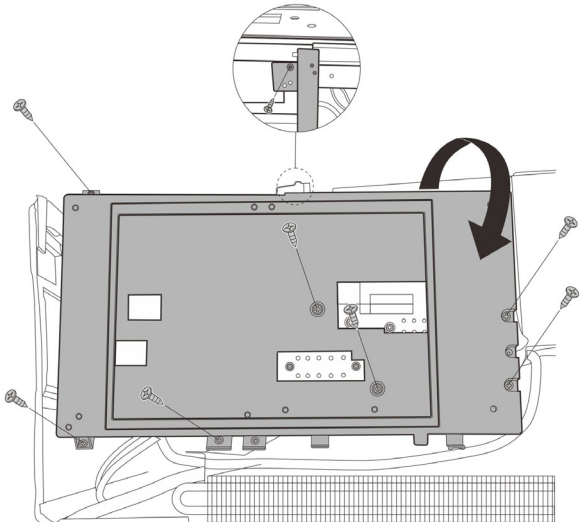 CJ_ODU_PCB_009-2

Note: This section is for reference only. Actual unit appearance may vary.

Procedure	Illustration
3) Pull out the two blue wires connected with the four way valve. (see CJ_ODU_PCB_009-3)(for heat pump models) 4) Pull out connectors of the condenser coil temp. sensor(T3),outdoor ambient temp. sensor(T4) and discharge temp. sensor(TP). (see CJ_ODU_PCB_009-3) 5) Disconnect the electronic expansion valve wire. (see Fig CJ_ODU_ PCB_009-3)(for some models) 6) Remove four screws and unfix the 3 hooks and then remove the main control board. (see CJ_ODU_ PCB_009-3) 7) Disconnect the connector for outdoor DC fan from the IPM board. (see CJ_ODU_PCB_009-3)(for some models) 8) Remove the connector for the compressor. (see CJ_ODU_PCB_009-3) 9) Remove the connector for the PFC Inductor. (see CJ_ODU_PCB_009-3) 10)Pull out 3 connectors between IPM board and main control board.(see CJ_ODU_PCB_009-3) 11)Remove two screws and unfix the 4 hooks and then remove the IPM board. (see CJ_ODU_PCB_009-3)	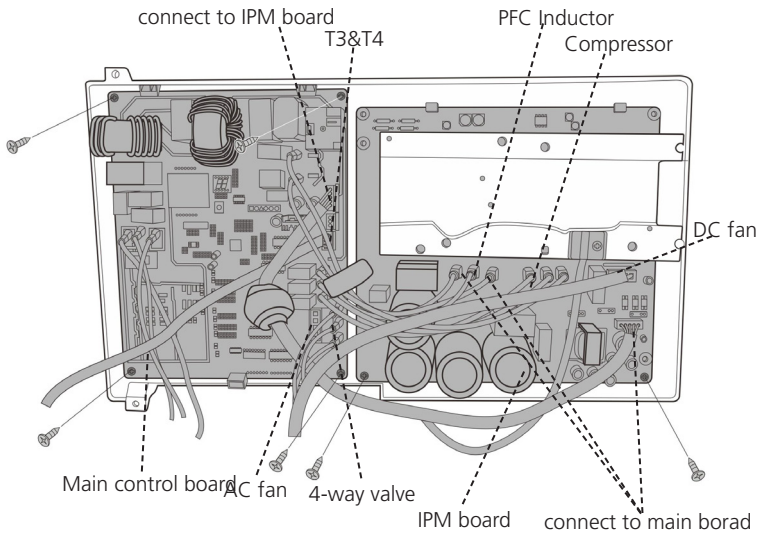 **CJ_ODU_PCB_009-3**

Note: This section is for reference only. Actual unit appearance may vary.

12. PCB board 10

Procedure	Illustration
1) Unfix the hooks and then open the electronic control box cover (4 hooks) (see CJ_ODU_PCB_010-1).	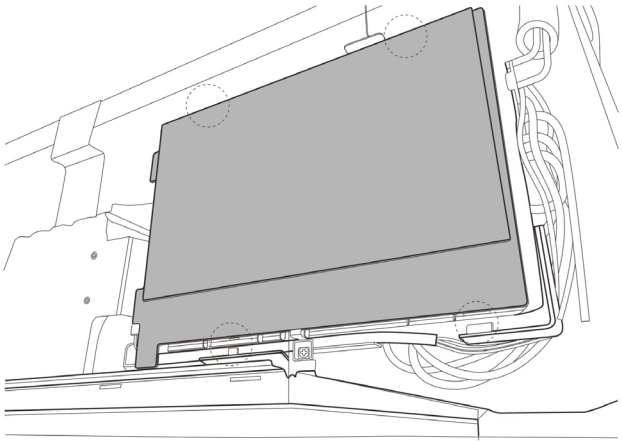 CJ_ODU_PCB_010-1
2) Remove 4 screws on the electronic control board and then turn over the electronic control board (see CJ_ODU_PCB_010-2).	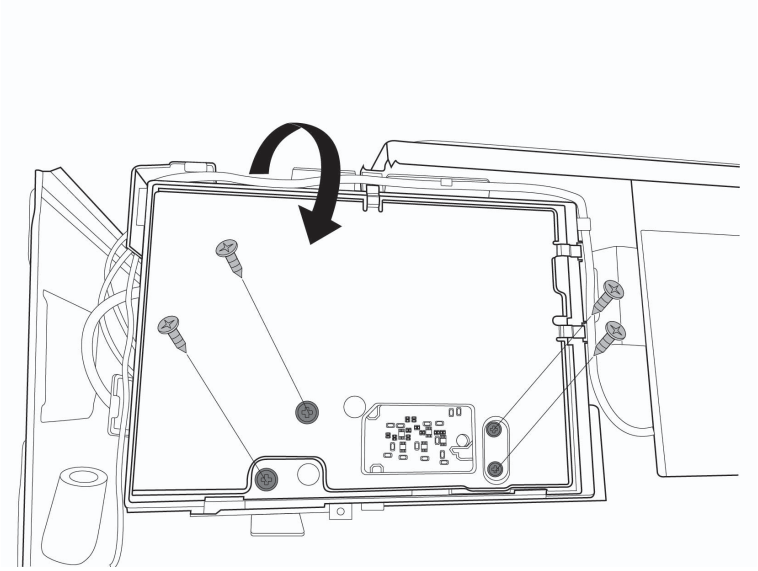 CJ_ODU_PCB_010-2

Note: This section is for reference only. Actual unit appearance may vary.

Procedure	Illustration
3) Pull out the connectors (see CJ_ ODU_PCB_010-3). 4) Remove the 9 screws and unfix the 3 hooks and then remove the electronic control board(see CJ_ ODU_PCB_010-3). 5) Remove two screws and then remove the electronic control box subassembly on partition board assembly. (see CJ_ODU_PCB_010-4).	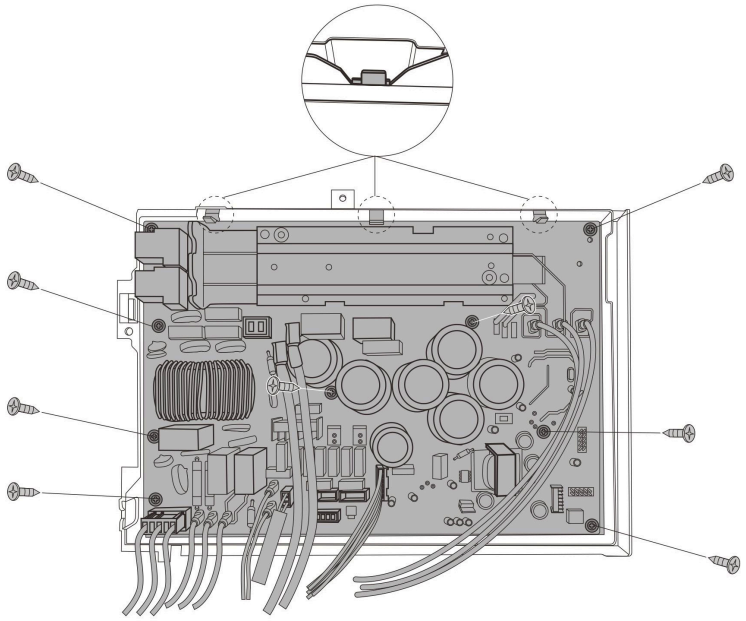 **CJ_ODU_PCB_010-3** 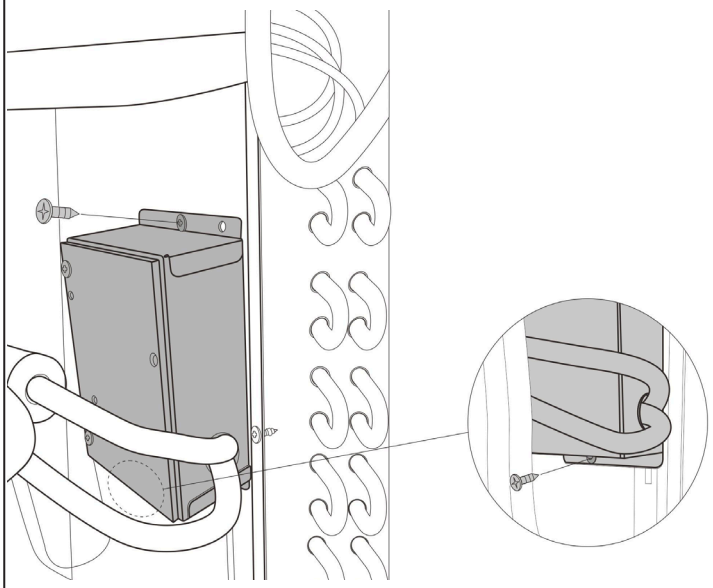 **CJ_ODU_PCB_010-4**

Note: This section is for reference only. Actual unit appearance may vary.

Procedure	Illustration
6) Remove two screws and two connectors and then remove the inverter control board (see CJ_ODU_PCB_010-5).	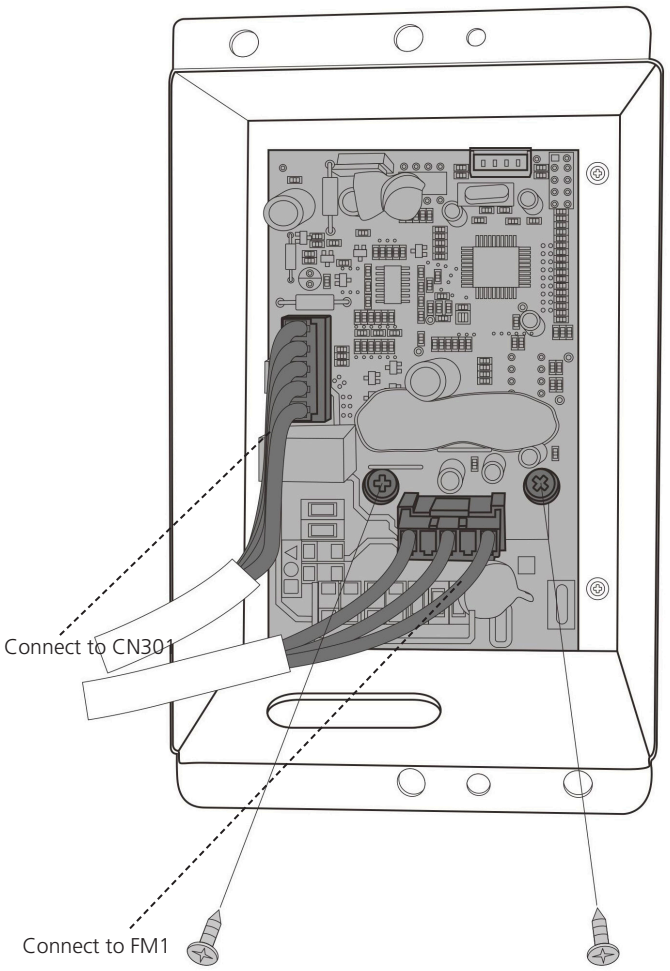 **CJ_ODU_PCB_010-5**

Note: This section is for reference only. Actual unit appearance may vary.

13. PCB board 11

Procedure	Illustration
1) Remove 2 screws to disconnect the power supply wires. (see CJ_ODU_PCB_011-1) 2) Remove 3 screws to disconnect ground wires. (see CJ_ODU_PCB_011-1) 3) Disconnect the wires connected to main control board. (see CJ_ODU_PCB_011-1) 4) Disconnect the wires between main control board and IPM module board. (see CJ_ODU_PCB_011-1) 5) Remove the 4 screws and unfix the 6 hooks and then remove the main control board.(see CJ_ODU_PCB_011-1) 6) Remove 1 screw to remove the fan motor capacitor(1 screw for each capacitor).(see CJ_ODU_PCB_004-1).	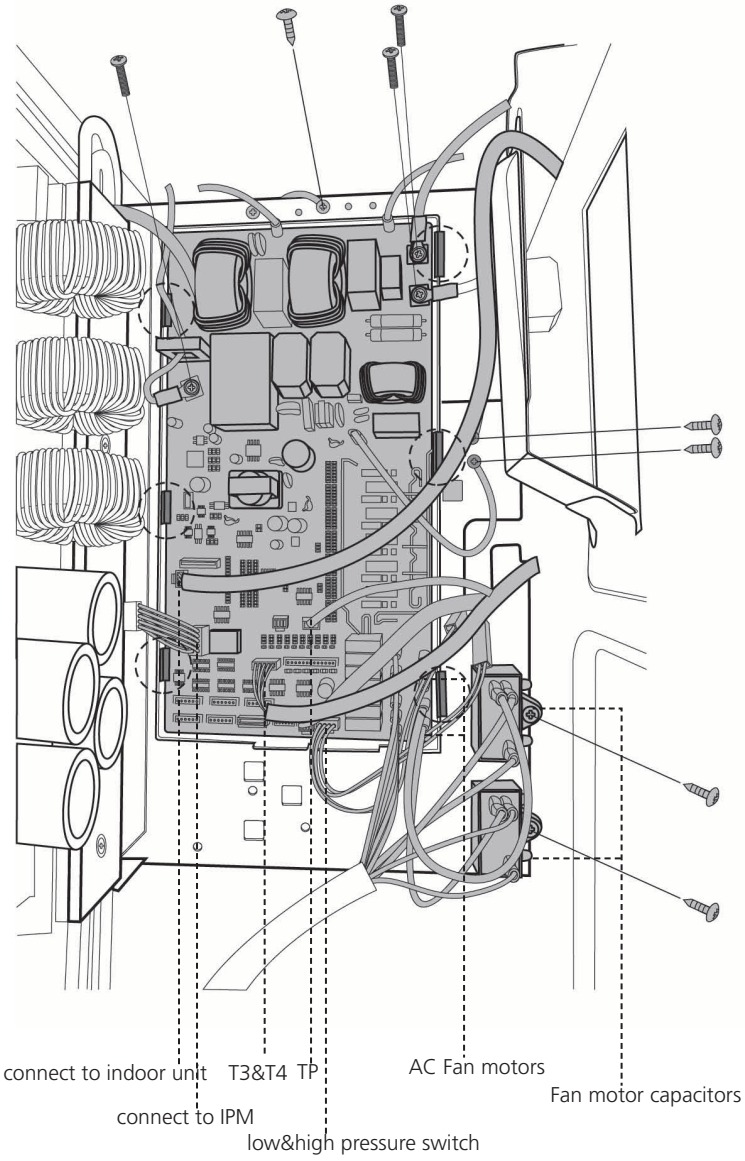 **CJ_ODU_PCB_011-1**

Note: This section is for reference only. Actual unit appearance may vary.

Procedure	Illustration
1) Remove 2 screws to disconnect the power supply wires. (see CJ_ODU_PCB_011-2) 2) Remove 3 screws to disconnect the wires connected to the compressor. (see CJ_ODU_PCB_011-2) 3) Remove 3 screws to remove the radiator.(see CJ_ODU_PCB_011-2) 4) Disconnect the wires between IPM module board and main control board. (see CJ_ODU_PCB_011-2) 5) Remove the 4 screws and unfix the 4 hooks and then remove the IPM moduel board.(see CJ_ODU_PCB_011-2)	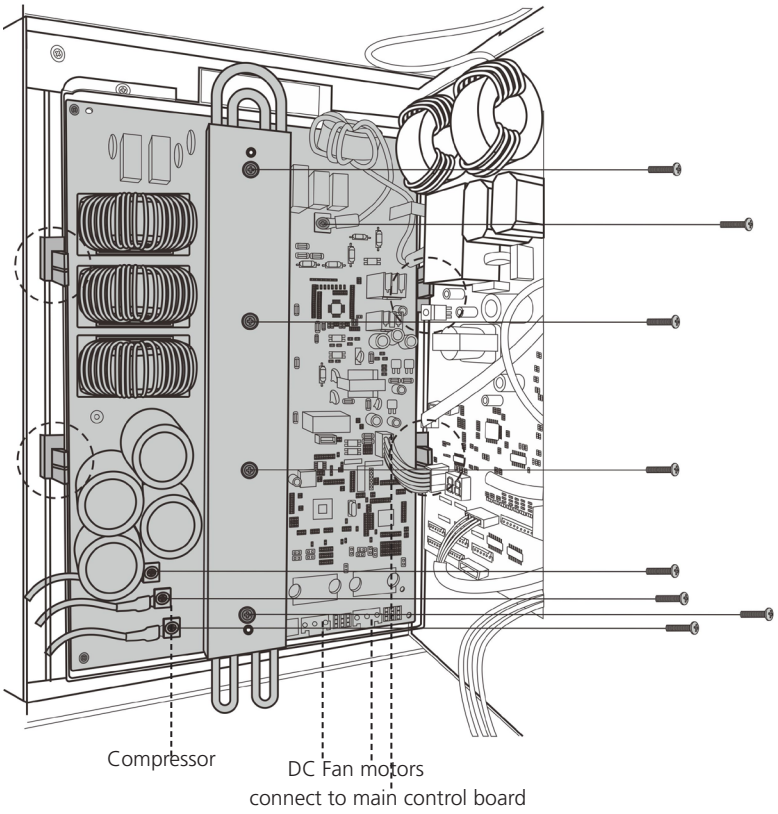 **CJ_ODU_PCB_011-2**

Note: This section is for reference only. Actual unit appearance may vary.

14. PCB board 12

Procedure	Illustration
1) Remove 3 screws to disconnect the wires connected to the compressor. (see CJ_ODU_PCB_012-1) 2) Remove 2 screws to disconnect the power supply wires. (see CJ_ODU_PCB_012-1) 3) Disconnect the wires connected to main control board. (see CJ_ODU_PCB_012-1) 4) Remove the 4 screws and unfix the 6 hooks and then remove the main control board.(see CJ_ODU_PCB_012-1) 5) Remove the screw of the fan capacitor and then remove it (1 screw for each capacitor). (see CJ_ODU_PCB_012-1)	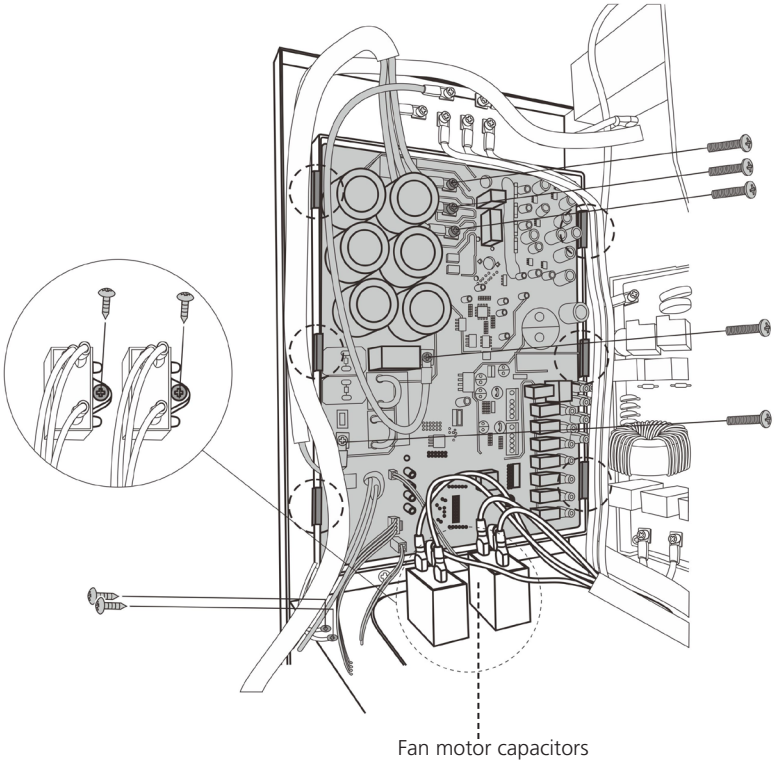 **CJ_ODU_PCB_012-1**

Note: This section is for reference only. Actual unit appearance may vary.

Procedure	Illustration
6) Remove 3 screws to disconnect the power supply wires. (see CJ_ODU_PCB_012-1) 7) Remove 3 screws to disconnect ground wires. (see CJ_ODU_PCB_012-1) 8) Disconnect the wires connected to main control board. (see CJ_ODU_PCB_012-2) 9) Remove the 4 screws and unfix the 4 hooks and then remove the filter board.(see CJ_ODU_PCB_012-2) 10)Remove the 2 screws of the reactor and then remove it . (see CJ_ODU_PCB_012-2)	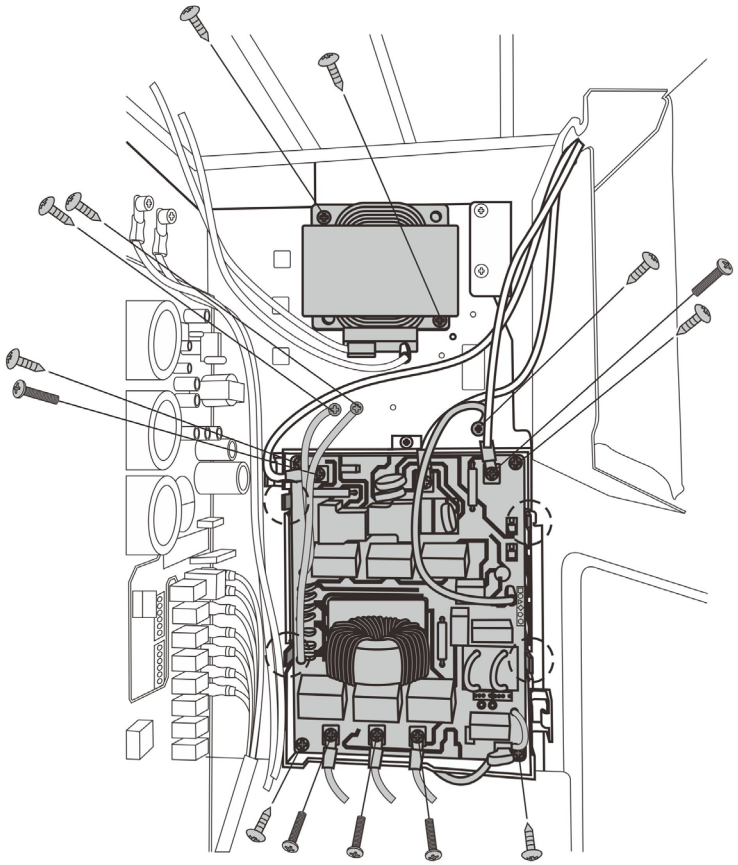 **CJ_ODU_PCB_012-2**
11)Disconnect the wires connected to main control board. (see CJ_ODU_PCB_012-3)(for some models) 12)Remove the 2 screws and then remove the DC motor driver board. (see CJ_ODU_PCB_012-3)(for some models)	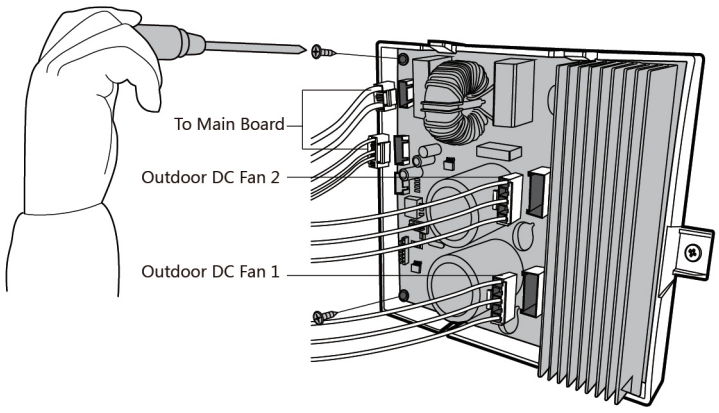 **CJ_ODU_PCB_012-3** **(for some models)**

Note: This section is for reference only. Actual unit appearance may vary.

15. PCB board 13

Procedure	Illustration
1) Unfix the hooks and then open the electronic control box cover (4 hooks) (see CJ_ODU_PCB_013-1).	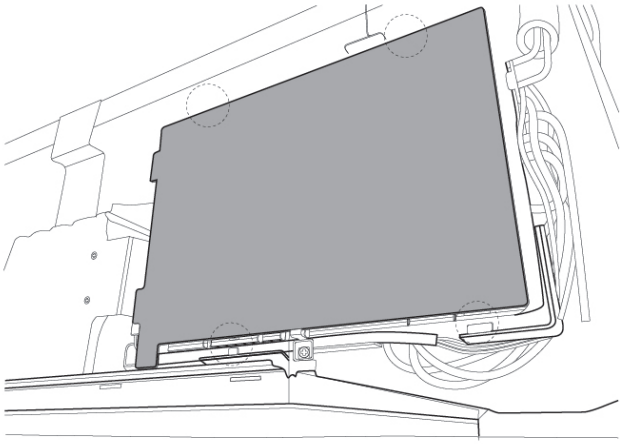 CJ_ODU_PCB_013-1
2) Remove 6 screws on the electronic control board and then turn over the electronic control board (see CJ_ODU_PCB_013-2).	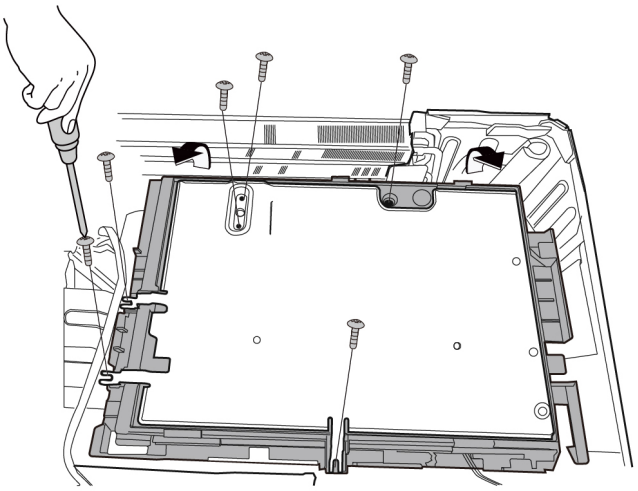 CJ_ODU_PCB_013-2

Note: This section is for reference only. Actual unit appearance may vary.

Procedure	Illustration
3) Pull out the connectors (see CJ_ ODU_PCB_013-3). 4) Remove the 4 screws and then remove the electronic control board(see CJ_ODU_PCB_013-3).	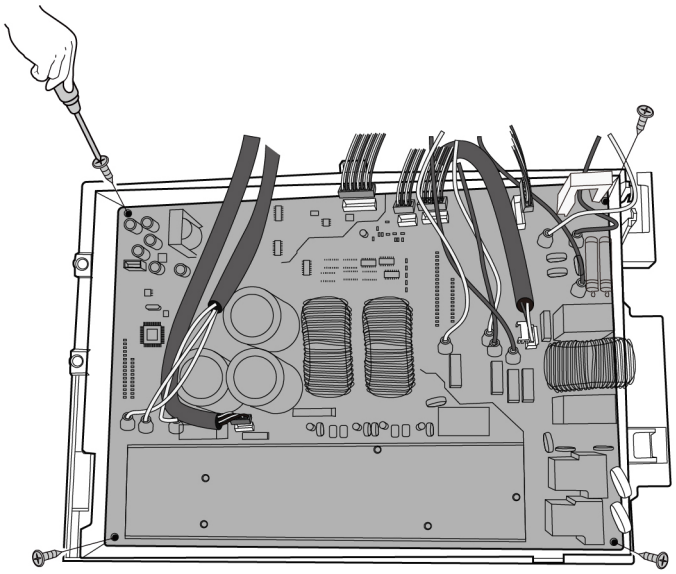 **CJ_ODU_PCB_013-3**
5) Pull out the connector, remove one screw and then remove the key board subassembly on terminal board. (see CJ_ODU_PCB_013-4) (for some units).	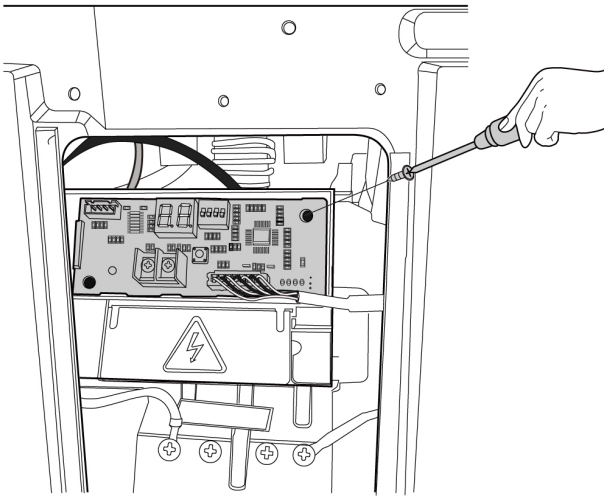 **CJ_ODU_PCB_013-4**

Note: This section is for reference only. Actual unit appearance may vary.

16. PCB board 16

Procedure	Illustration
1) Disconnect the connector for compressor and release the ground wire(1 screw). (see CJ_ODU_PCB_016-1).	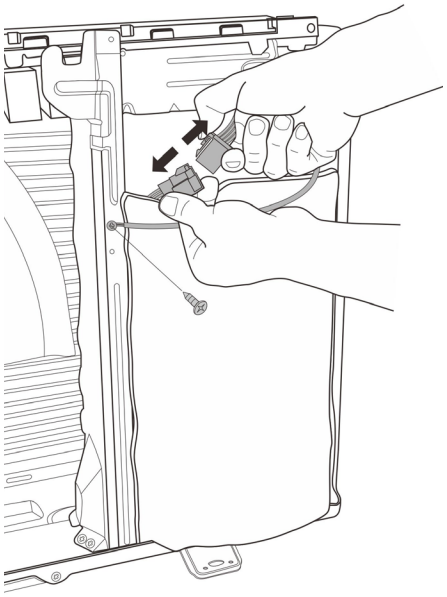 CJ_ODU_PCB_016-1
2) Pull out the wires from electrical supporting plate and turn over the electronic control assembly. (see CJ_ODU_PCB_016-2).	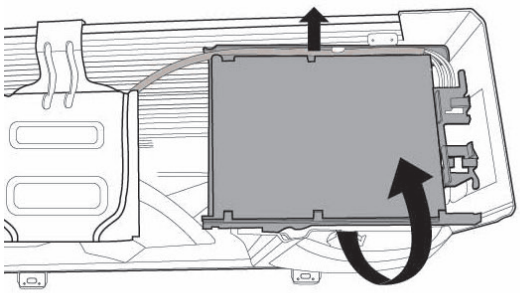 CJ_ODU_PCB_016-2
3) Remove the electronic installing box subassembly (4 hooks) (see CJ_ODU_PCB_016-3).	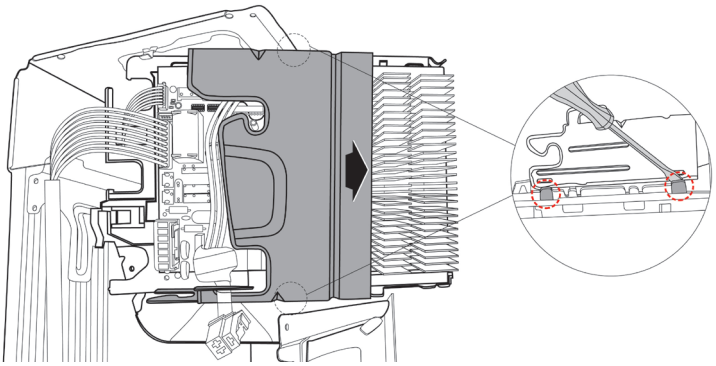 CJ_ODU_PCB_016-3

Note: This section is for reference only. Actual unit appearance may vary.

Procedure	Illustration
4) Remove the fixing board (2 hooks) (see CJ_ODU_PCB_016-4).	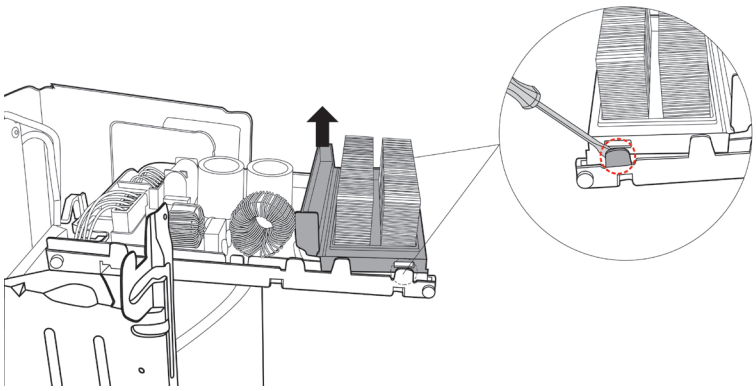 CJ_ODU_PCB_016-4
5) Disconnect the connectors from the electronic control board (see CJ_ODU_PCB_016-5).	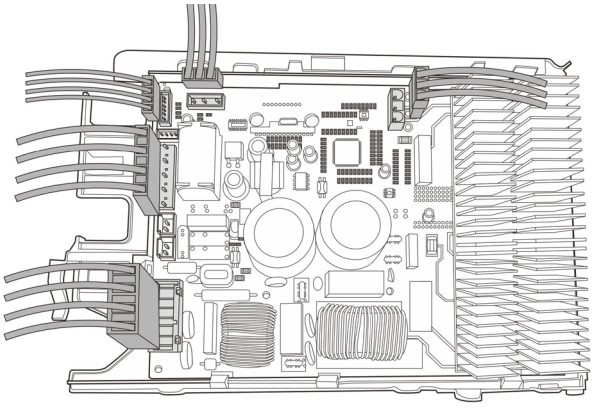 CJ_ODU_PCB_016-5
6) Then remove the electronic control board (4 hooks).(see CJ_ODU_PCB_016-6).	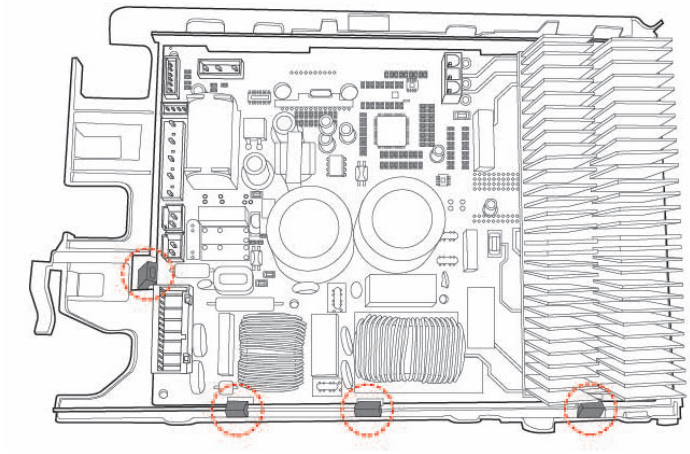 CJ_ODU_PCB_016-6

Note: This section is for reference only. Actual unit appearance may vary.

17. PCB board 17

Procedure	Illustration
1) Pull out the connectors (see CJ_ ODU_PCB_017-1). 2) Remove the 9 screws and unfix the 3 hooks and then remove the electronic control board(see CJ_ ODU_PCB_017-2).	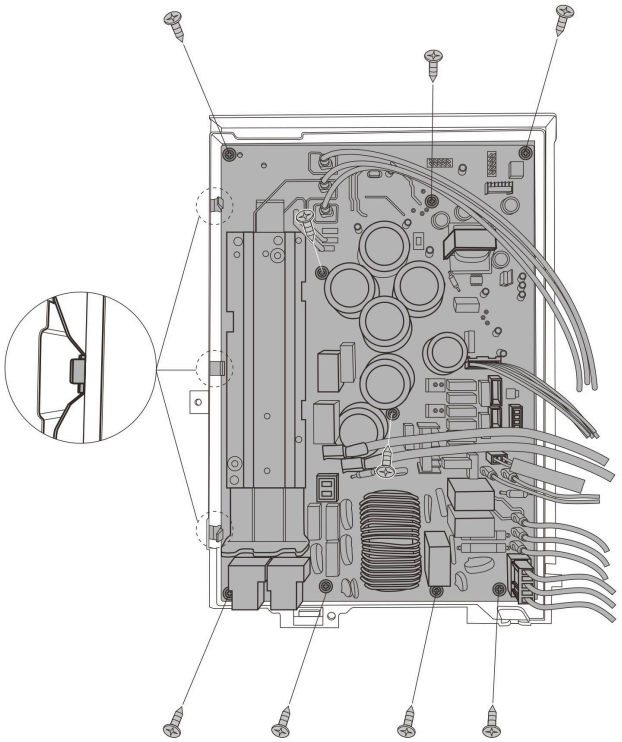 **CJ_ODU_PCB_017-1**
3) Disconnect the wires connected to main control board. (see CJ_ODU_ PCB_017-2)(for some models) 4) Remove the 2 screws and then remove the DC motor driver board. (see CJ_ODU_PCB_017-2)(for some models)	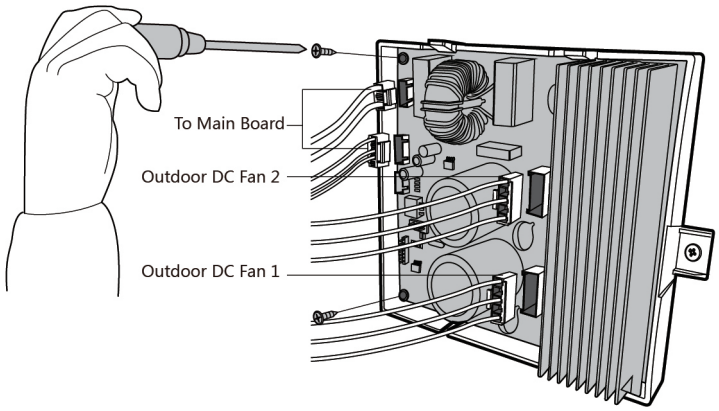 **CJ_ODU_PCB_017-2 (for some models)**

Note: This section is for reference only. Actual unit appearance may vary.

2.3 Fan Assembly

Note: Remove the panel plate (refer to 3.1 Panel Plate) before disassembling fan.

Procedure	Illustration
1) Remove the nut securing the fan with a spanner (see CJ_ODU_FAN_001-1&2). 2) Remove the fan.	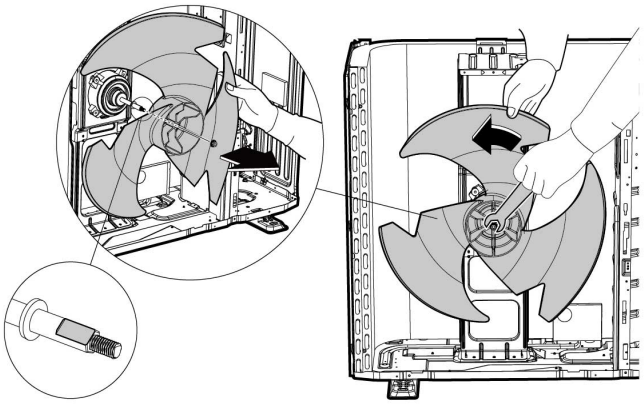 **CJ_ODU_FAN_001-1** 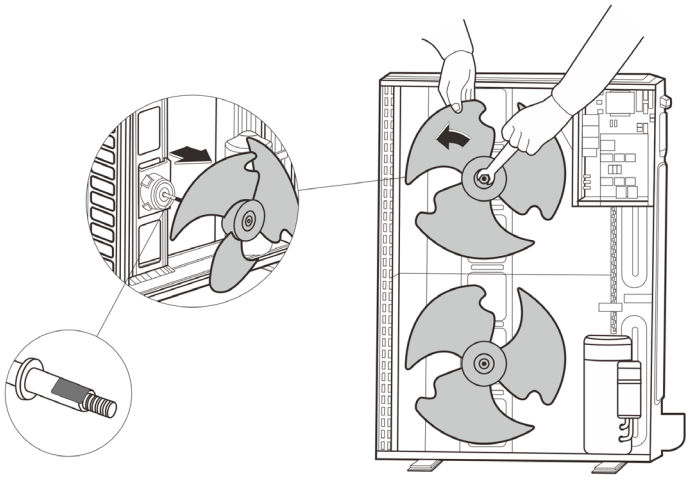 **CJ_ODU_FAN_001-2**

Note: This section is for reference only. Actual unit appearance may vary.

2.4 Fan Motor

Note: Remove the panel plate and the connection of fan motor on PCB (refer to 3.1 Panel Plate and 3.2 Electrical parts) before disassembling fan motor.

Procedure	Illustration
3) Remove the fixing screws of the fan motor (4 screws) (see CJ_ODU_MOTOR_001). 4) Remove the fan motor.	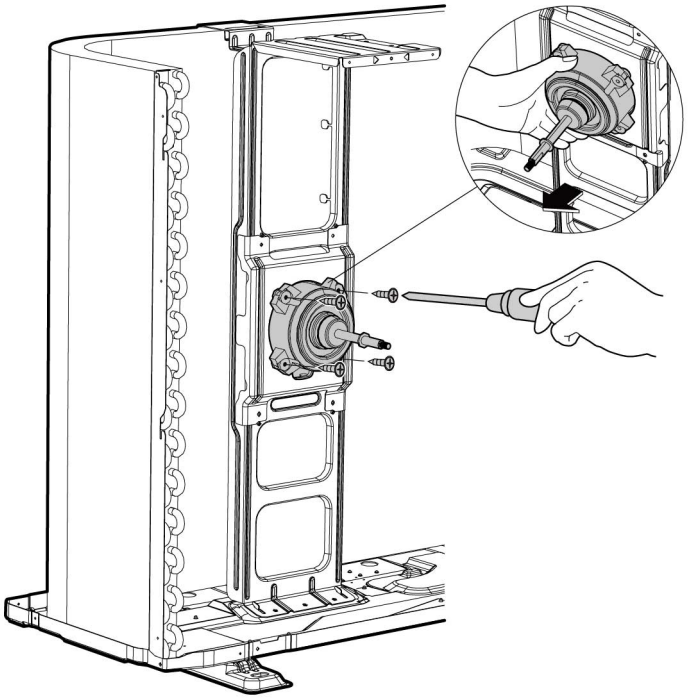 **CJ_ODU_MOTOR_001**

Note: This section is for reference only. Actual unit appearance may vary.

2.5 Sound blanket

Note: Remove the panel plate (refer to 3.1 Panel plate) before disassembling sound blanket.

Procedure	Illustration
1) Remove the sound blanket (side and top) (see CJ_ODU_BLANKET_001).	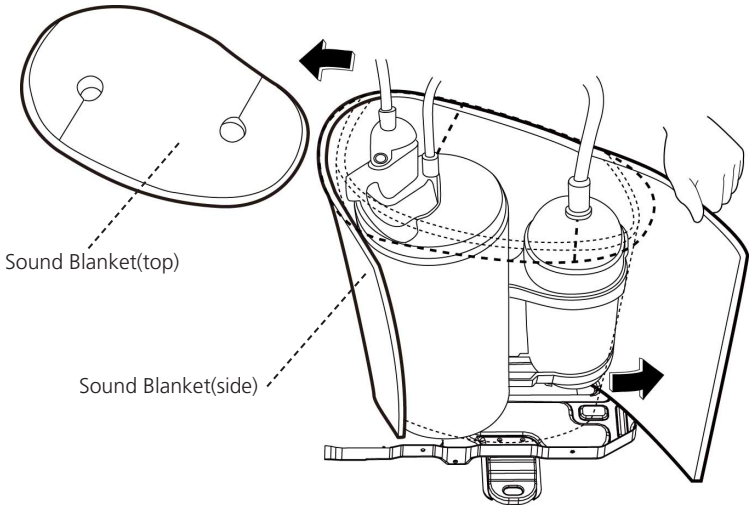 **CJ_ODU_BLANKET_001**

Note: This section is for reference only. Actual unit appearance may vary.

2.6 Four-way valve (for heat pump models)

WARNING: Evacuate the system and confirm that there is no refrigerant left in the system before removing the four-way valve and the compressor. (For R32 & R290, you should evacuate the system with the vacuum pump; flush the system with nitrogen; then repeat the two steps before heating up the brazed parts. The operations above should be implemented by professionals.)

Note: Remove the panel plate, connection of four-way valve on PCB (refer to 3.1 Panel plate and 3.2 Electrical parts) before disassembling sound blanket.

Procedure	Illustration
1) Heat up the brazed parts and then detach the the four-way valve and the pipe (see CJ_ODU_VALVE_001). 2) Remove the four-way valve assembly with pliers.	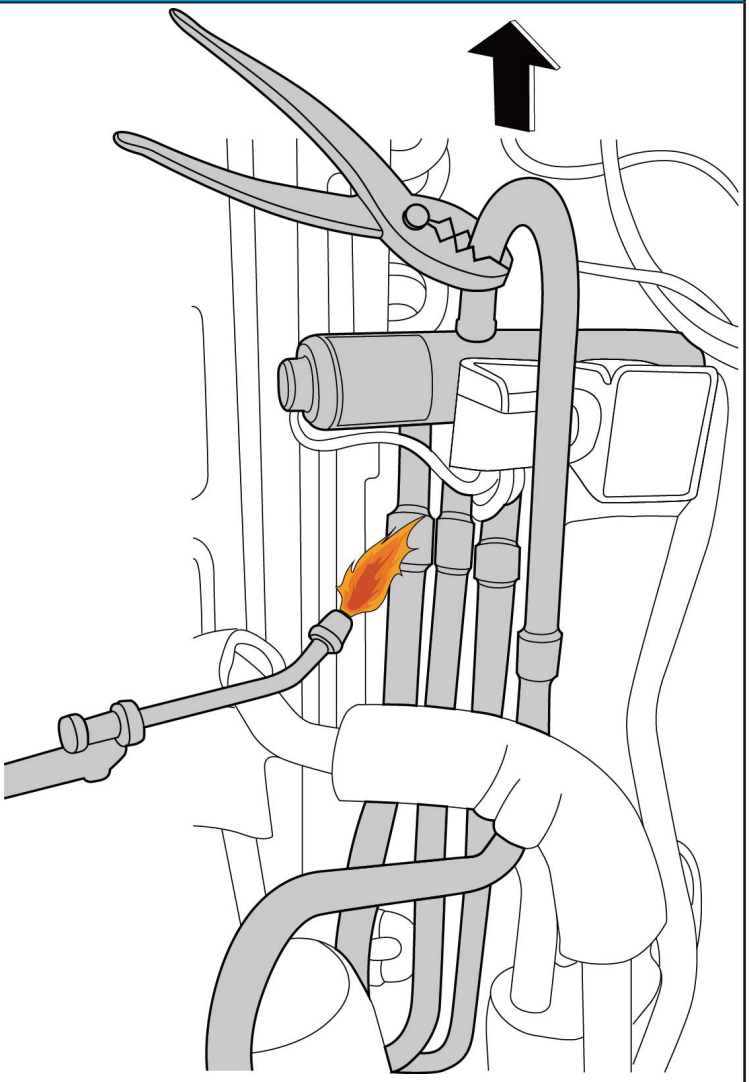

CJ_ODU_VALVE_001

Note: This section is for reference only. Actual unit appearance may vary.

2.7 Compressor

WARNING: Evacuate the system and confirm that there is no refrigerant left in the system before removing the four-way valve and the compressor. (For R32 & R290, you should evacuate the system with the vacuum pump; flush the system with nitrogen; then repeat the two steps before heating up the brazed parts. The operations above should be implemented by professionals.)

Note: Remove the panel plate, connection of compressor on PCB (refer to 3.1 Panel plate and 3.2 Electrical parts) before disassembling sound blanket.

Procedure	Illustration
1) Remove the flange nut of terminal cover and remove the terminal cover (see CJ_ ODU_COMP_001).	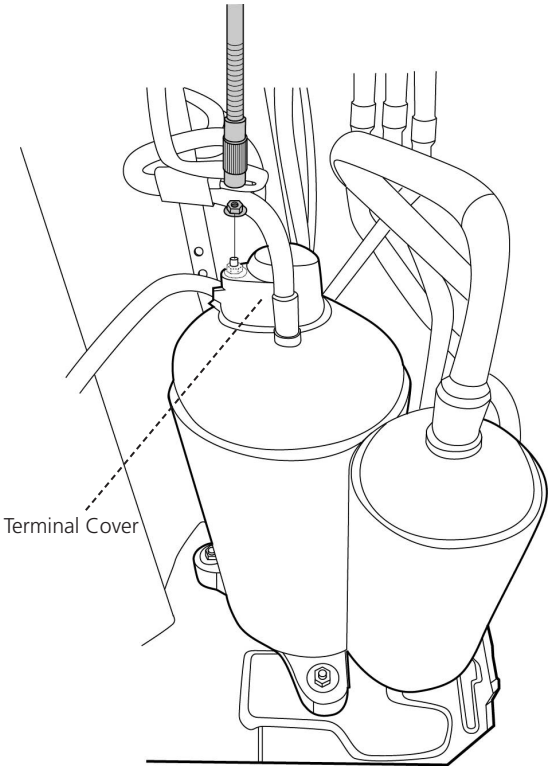 CJ_ODU_COMP_001
2) Disconnect the connectors (see CJ_ODU_ COMP_002).	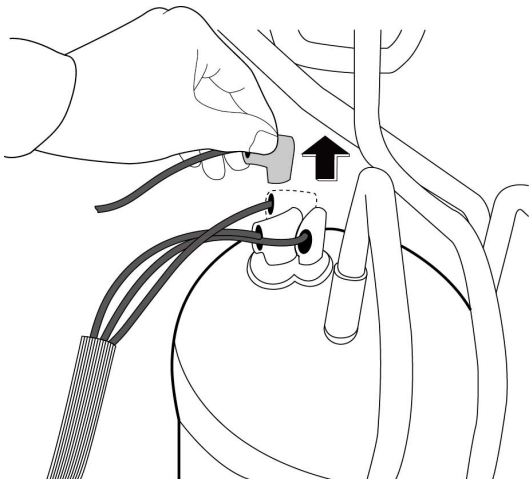 CJ_ODU_COMP_002

Note: This section is for reference only. Actual unit appearance may vary.

Procedure	Illustration
3) Remove the hex nuts and washers securing the compressor, located on the bottom plate (see CJ_ODU_COMP_003).	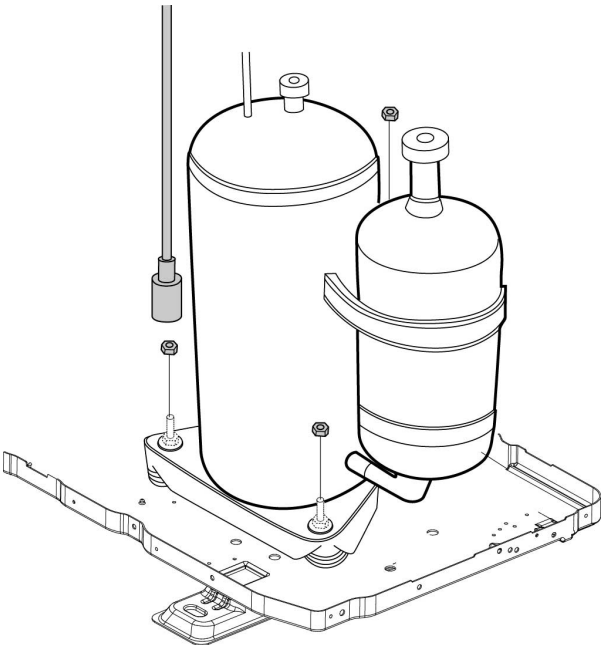 CJ_ODU_COMP_003
4) Heat up the brazed parts and then remove the the discharge pipe and the suction pipe (see CJ_ODU_COMP_004). 5) Lift the compressor from the base pan assembly with pliers.	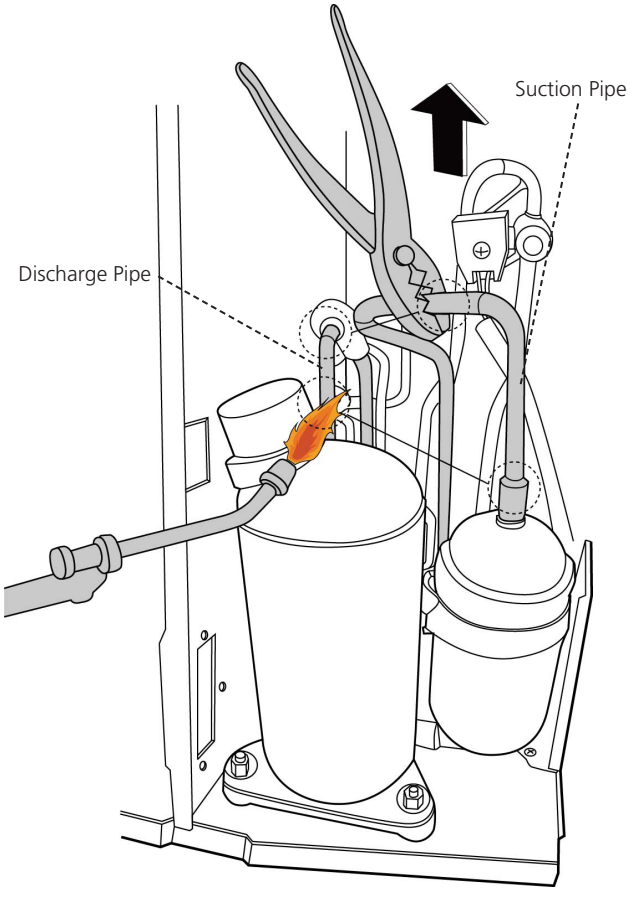 CJ_ODU_COMP_004

Note: This section is for reference only. Actual unit appearance may vary.

Appendix

Contents

i) Temperature Sensor Resistance Value Table for T1, T2, T3, and T4 (°C – K) 2

ii) Temperature Sensor Resistance Value Table for TP (for some units)(°C --K) 3

iii) Pressure On Service Port 4

i) Temperature Sensor Resistance Value Table for T1,T2,T3 and T4 (°C – K)

°C	°F	K Ohm	°C	°F	K Ohm	°C	°F	K Ohm	°C	°F	K Ohm
-20	-4	115.266	20	68	12.6431	60	140	2.35774	100	212	0.62973
-19	-2	108.146	21	70	12.0561	61	142	2.27249	101	214	0.61148
-18	0	101.517	22	72	11.5	62	144	2.19073	102	216	0.59386
-17	1	96.3423	23	73	10.9731	63	145	2.11241	103	217	0.57683
-16	3	89.5865	24	75	10.4736	64	147	2.03732	104	219	0.56038
-15	5	84.219	25	77	10	65	149	1.96532	105	221	0.54448
-14	7	79.311	26	79	9.55074	66	151	1.89627	106	223	0.52912
-13	9	74.536	27	81	9.12445	67	153	1.83003	107	225	0.51426
-12	10	70.1698	28	82	8.71983	68	154	1.76647	108	226	0.49989
-11	12	66.0898	29	84	8.33566	69	156	1.70547	109	228	0.486
-10	14	62.2756	30	86	7.97078	70	158	1.64691	110	230	0.47256
-9	16	58.7079	31	88	7.62411	71	160	1.59068	111	232	0.45957
-8	18	56.3694	32	90	7.29464	72	162	1.53668	112	234	0.44699
-7	19	52.2438	33	91	6.98142	73	163	1.48481	113	235	0.43482
-6	21	49.3161	34	93	6.68355	74	165	1.43498	114	237	0.42304
-5	23	46.5725	35	95	6.40021	75	167	1.38703	115	239	0.41164
-4	25	44	36	97	6.13059	76	169	1.34105	116	241	0.4006
-3	27	41.5878	37	99	5.87359	77	171	1.29078	117	243	0.38991
-2	28	39.8239	38	100	5.62961	78	172	1.25423	118	244	0.37956
-1	30	37.1988	39	102	5.39689	79	174	1.2133	119	246	0.36954
0	32	35.2024	40	104	5.17519	80	176	1.17393	120	248	0.35982
1	34	33.3269	41	106	4.96392	81	178	1.13604	121	250	0.35042
2	36	31.5635	42	108	4.76253	82	180	1.09958	122	252	0.3413
3	37	29.9058	43	109	4.5705	83	181	1.06448	123	253	0.33246
4	39	28.3459	44	111	4.38736	84	183	1.03069	124	255	0.3239
5	41	26.8778	45	113	4.21263	85	185	0.99815	125	257	0.31559
6	43	25.4954	46	115	4.04589	86	187	0.96681	126	259	0.30754
7	45	24.1932	47	117	3.88673	87	189	0.93662	127	261	0.29974
8	46	22.5662	48	118	3.73476	88	190	0.90753	128	262	0.29216
9	48	21.8094	49	120	3.58962	89	192	0.8795	129	264	0.28482
10	50	20.7184	50	122	3.45097	90	194	0.85248	130	266	0.2777
11	52	19.6891	51	124	3.31847	91	196	0.82643	131	268	0.27078
12	54	18.7177	52	126	3.19183	92	198	0.80132	132	270	0.26408
13	55	17.8005	53	127	3.07075	93	199	0.77709	133	271	0.25757
14	57	16.9341	54	129	2.95896	94	201	0.75373	134	273	0.25125
15	59	16.1156	55	131	2.84421	95	203	0.73119	135	275	0.24512
16	61	15.3418	56	133	2.73823	96	205	0.70944	136	277	0.23916
17	63	14.6181	57	135	2.63682	97	207	0.68844	137	279	0.23338
18	64	13.918	58	136	2.53973	98	208	0.66818	138	280	0.22776
19	66	13.2631	59	138	2.44677	99	210	0.64862	139	282	0.22231

ii) Temperature Sensor Resistance Value Table for TP(for some units) (°C --K)

°C	°F	K Ohm	°C	°F	K Ohm	°C	°F	K Ohm	°C	°F	K Ohm
°C	°F	K Ohm	°C	°F	K Ohm	°C	°F	K Ohm	°C	°F	K Ohm
-20	-4	542.7	20	68	68.66	60	140	13.59	100	212	3.702
-19	-2	511.9	21	70	65.62	61	142	13.11	101	214	3.595
-18	0	483	22	72	62.73	62	144	12.65	102	216	3.492
-17	1	455.9	23	73	59.98	63	145	12.21	103	217	3.392
-16	3	430.5	24	75	57.37	64	147	11.79	104	219	3.296
-15	5	406.7	25	77	54.89	65	149	11.38	105	221	3.203
-14	7	384.3	26	79	52.53	66	151	10.99	106	223	3.113
-13	9	363.3	27	81	50.28	67	153	10.61	107	225	3.025
-12	10	343.6	28	82	48.14	68	154	10.25	108	226	2.941
-11	12	325.1	29	84	46.11	69	156	9.902	109	228	2.86
-10	14	307.7	30	86	44.17	70	158	9.569	110	230	2.781
-9	16	291.3	31	88	42.33	71	160	9.248	111	232	2.704
-8	18	275.9	32	90	40.57	72	162	8.94	112	234	2.63
-7	19	261.4	33	91	38.89	73	163	8.643	113	235	2.559
-6	21	247.8	34	93	37.3	74	165	8.358	114	237	2.489
-5	23	234.9	35	95	35.78	75	167	8.084	115	239	2.422
-4	25	222.8	36	97	34.32	76	169	7.82	116	241	2.357
-3	27	211.4	37	99	32.94	77	171	7.566	117	243	2.294
-2	28	200.7	38	100	31.62	78	172	7.321	118	244	2.233
-1	30	190.5	39	102	30.36	79	174	7.086	119	246	2.174
0	32	180.9	40	104	29.15	80	176	6.859	120	248	2.117
1	34	171.9	41	106	28	81	178	6.641	121	250	2.061
2	36	163.3	42	108	26.9	82	180	6.43	122	252	2.007
3	37	155.2	43	109	25.86	83	181	6.228	123	253	1.955
4	39	147.6	44	111	24.85	84	183	6.033	124	255	1.905
5	41	140.4	45	113	23.89	85	185	5.844	125	257	1.856
6	43	133.5	46	115	22.89	86	187	5.663	126	259	1.808
7	45	127.1	47	117	22.1	87	189	5.488	127	261	1.762
8	46	121	48	118	21.26	88	190	5.32	128	262	1.717
9	48	115.2	49	120	20.46	89	192	5.157	129	264	1.674
10	50	109.8	50	122	19.69	90	194	5	130	266	1.632
11	52	104.6	51	124	18.96	91	196	4.849			
12	54	99.69	52	126	18.26	92	198	4.703			
13	55	95.05	53	127	17.58	93	199	4.562			
14	57	90.66	54	129	16.94	94	201	4.426			
15	59	86.49	55	131	16.32	95	203	4.294			
16	61	82.54	56	133	15.73	96	205	4.167			
17	63	78.79	57	135	15.16	97	207	4.045			
18	64	75.24	58	136	14.62	98	208	3.927			
19	66	71.86	59	138	14.09	99	210	3.812			

iii) Pressure On Service Port

Cooling chart(R410A):

°F(°C)	ODU(DB) / IDU(DB/WB)	0(-17)	5(-15)	15 (-9.44)	45 (7.22)	75 (23.89)	85 (29.44)	95 (35)	105 (40.56)	115 (46.11)	120 (48.89)
BAR	70/59 (21.11/15)	6.4	6.5	7.3	8.0	8.2	7.8	8.1	8.6	10.1	10.6
	75/63 (23.89/17.22)	6.7	6.8	7.9	8.6	8.6	8.3	8.7	9.1	10.7	11.2
	80/67 (26.67/19.44)	7.1	7.2	8.5	9.5	9.3	8.9	9.1	9.6	11.2	11.9
	90/73 (32.22/22.78)	7.7	7.8	9.6	10.5	10.3	9.5	10.0	10.6	12.4	13.0
PSI	70/59 (21.11/15)	93	94	106	116	119	113	117	125	147	154
	75/63 (23.89/17.22)	97	99	115	125	124	120	126	132	155	162
	80/67 (26.67/19.44)	103	104	123	138	135	129	132	140	162	173
	90/73 (32.22/22.78)	112	113	139	152	149	138	145	154	180	189
MPa	70/59 (21.11/15)	0.64	0.65	0.73	0.8	0.82	0.78	0.81	0.86	1.01	1.06
	75/63 (23.89/17.22)	0.67	0.68	0.79	0.86	0.86	0.83	0.87	0.91	1.07	1.12
	80/67 (26.67/19.44)	0.71	0.72	0.85	0.95	0.93	0.89	0.91	0.96	1.12	1.19
	90/73 (32.22/22.78)	0.77	0.78	0.96	1.05	1.03	0.95	1	1.06	1.24	1.3

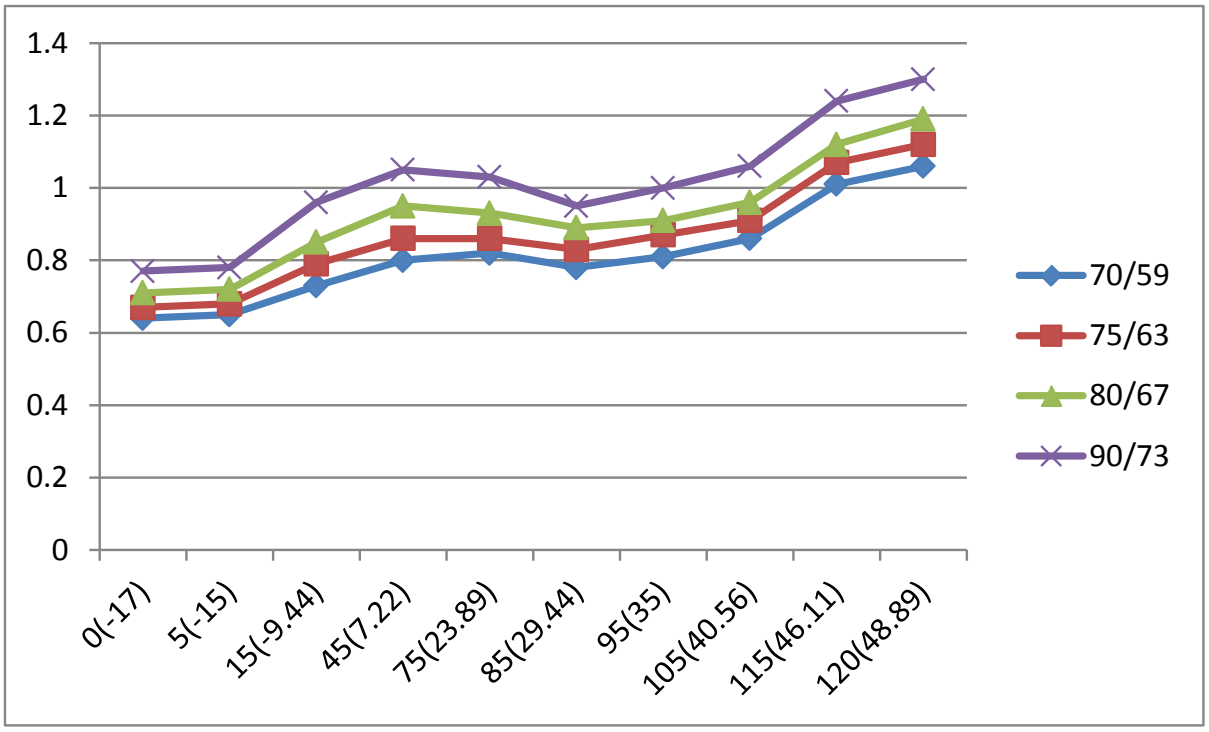

Heating chart(R410A):

°F(°C)	QDU(DB/WB) / IDU(DB)	57/53 (13.89/11.67)	47/43 (8.33/6.11)	37/33 (2.78/0.56)	27/23 (-2.78/-5)	17/13 (-8.33/-10.56)	0/-2 (-17/-19)	-17/-18 (-27/-28)
BAR	55(12.78)	30.3	28.5	25.3	22.8	20.8	18.5	16.5
	65(18.33)	32.5	30.0	26.6	25.4	23.3	20.5	19.0
	75(23.89)	33.8	31.5	27.8	26.3	24.9	21.5	20.0
PSI	55(12.78)	439	413	367	330	302	268	239
	65(18.33)	471	435	386	368	339	297	276
	75(23.89)	489	457	403	381	362	312	290
MPa	55(12.78)	3.03	2.85	2.53	2.28	2.08	1.85	1.65
	65(18.33)	3.25	3.00	2.66	2.54	2.33	2.05	1.90
	75(23.89)	3.38	3.15	2.78	2.63	2.49	2.15	2.00

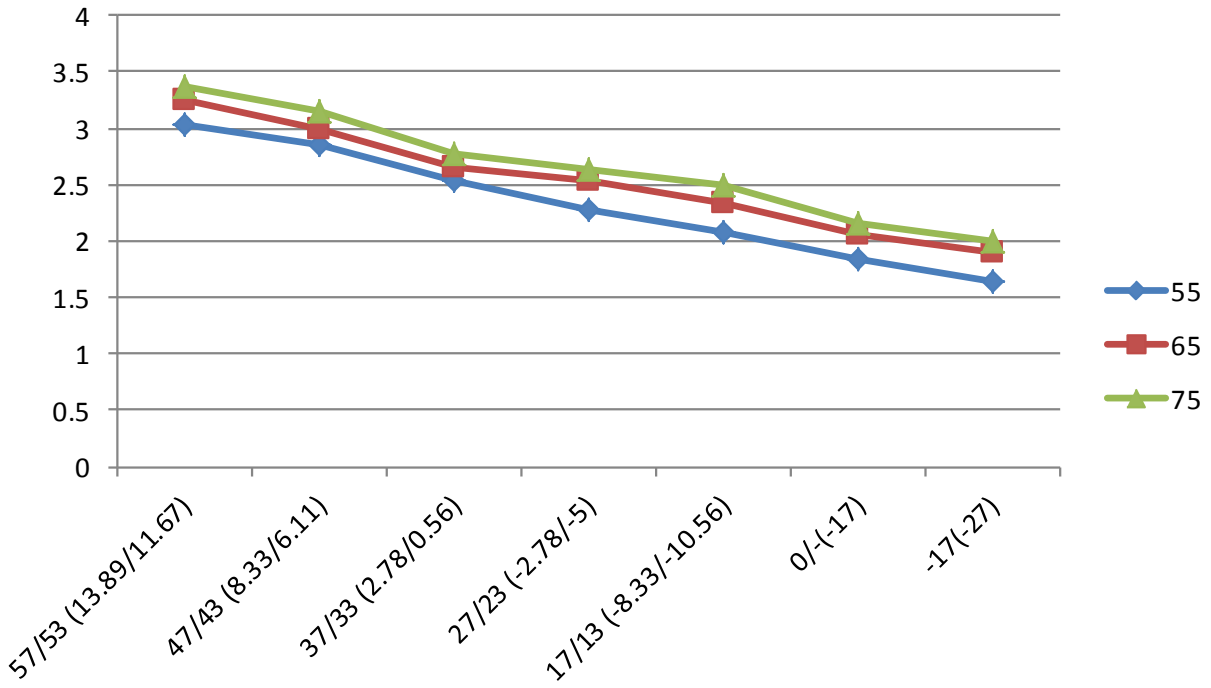

Cooling chart(R22):

°F(°C)	ODU(DB) / IDU(DB/WB)	0(-17)	5(-15)	15 (-9.44)	45 (7.22)	75 (23.89)	85 (29.44)	95 (35)	105 (40.56)	115 (46.11)	120 (48.89)
BAR	70/59 (21.11/15)	4.0	4.1	4.6	5.0	5.1	4.9	5.1	5.4	6.3	6.6
	75/63 (23.89/17.22)	4.2	4.3	4.9	5.4	5.4	5.2	5.4	5.7	6.7	7.0
	80/67 (26.67/19.44)	4.4	4.5	5.3	5.9	5.8	5.6	5.7	6.0	7.0	7.4
	90/73 (32.22/22.78)	4.8	4.9	6.0	6.6	6.4	5.9	6.3	6.6	7.8	8.1
PSI	70/59 (21.11/15)	58	59	67	73	74	71	74	78	91	96
	75/63 (23.89/17.22)	61	62	71	78	78	75	78	83	97	102
	80/67 (26.67/19.44)	64	65	77	86	84	81	83	87	102	107
	90/73 (32.22/22.78)	70	71	87	96	93	86	91	96	113	117
MPa	70/59 (21.11/15)	0.40	0.41	0.46	0.50	0.51	0.49	0.51	0.54	0.63	0.66
	75/63 (23.89/17.22)	0.42	0.43	0.49	0.54	0.54	0.52	0.54	0.57	0.67	0.70
	80/67 (26.67/19.44)	0.44	0.45	0.53	0.59	0.58	0.56	0.57	0.60	0.70	0.74
	90/73 (32.22/22.78)	0.48	0.49	0.60	0.66	0.64	0.59	0.63	0.66	0.78	0.81

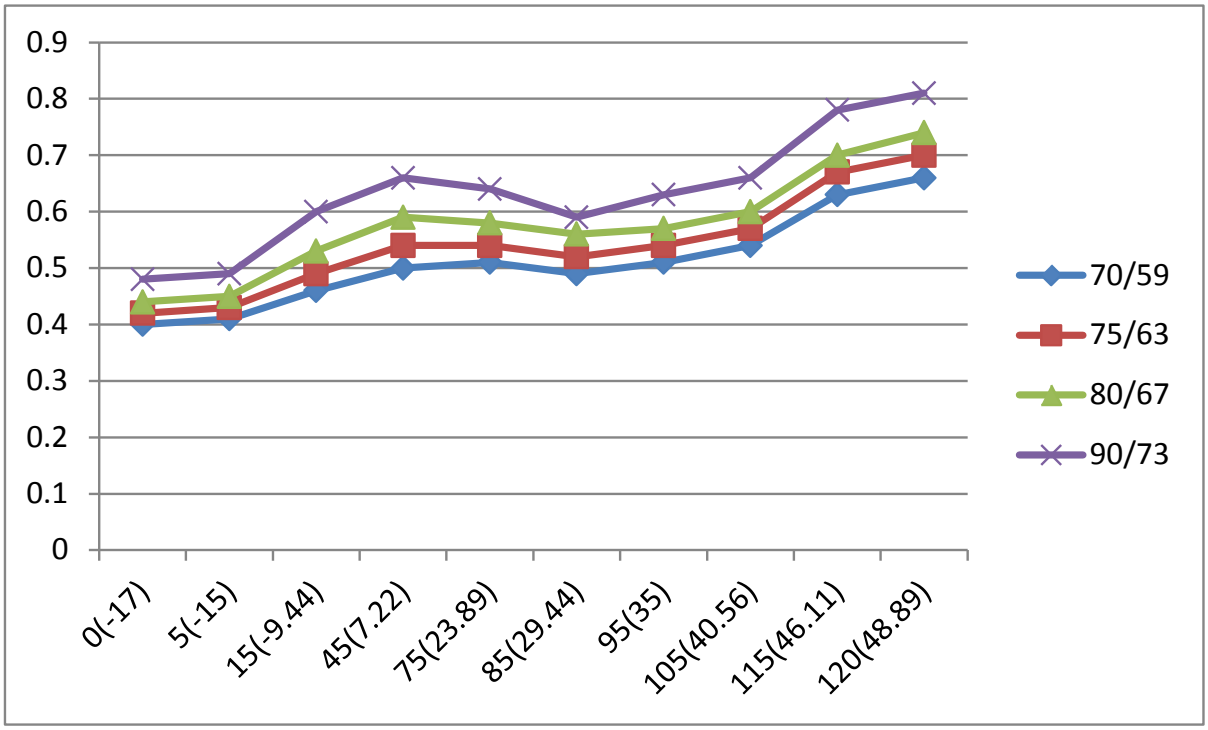

Heating chart(R22):

°F(°C)	QDU(DB/WB) / IDU(DB)	57/53 (13.89/11.67)	47/43 (8.33/6.11)	37/33 (2.78/0.56)	27/23 (-2.78/-5)	17/13 (-8.33/-10.56)	0/-2 (-17/-19)	-17/-18 (-27/-28)
BAR	55(12.78)	18.9	17.8	15.8	14.3	13.0	11.6	10.3
	65(18.33)	20.3	18.8	16.6	15.9	14.6	12.8	11.9
	75(23.89)	21.1	19.7	17.3	16.4	15.6	13.4	12.5
PSI	55(12.78)	274	258	229	207	189	168	149
	65(18.33)	294	273	241	231	212	186	172.6
	75(23.89)	306	286	251	238	226	194	181
MPa	55(12.78)	1.89	1.78	1.58	1.43	1.30	1.16	1.03
	65(18.33)	2.03	1.88	1.66	1.59	1.46	1.28	1.19
	75(23.89)	2.11	1.97	1.73	1.64	1.56	1.34	1.25

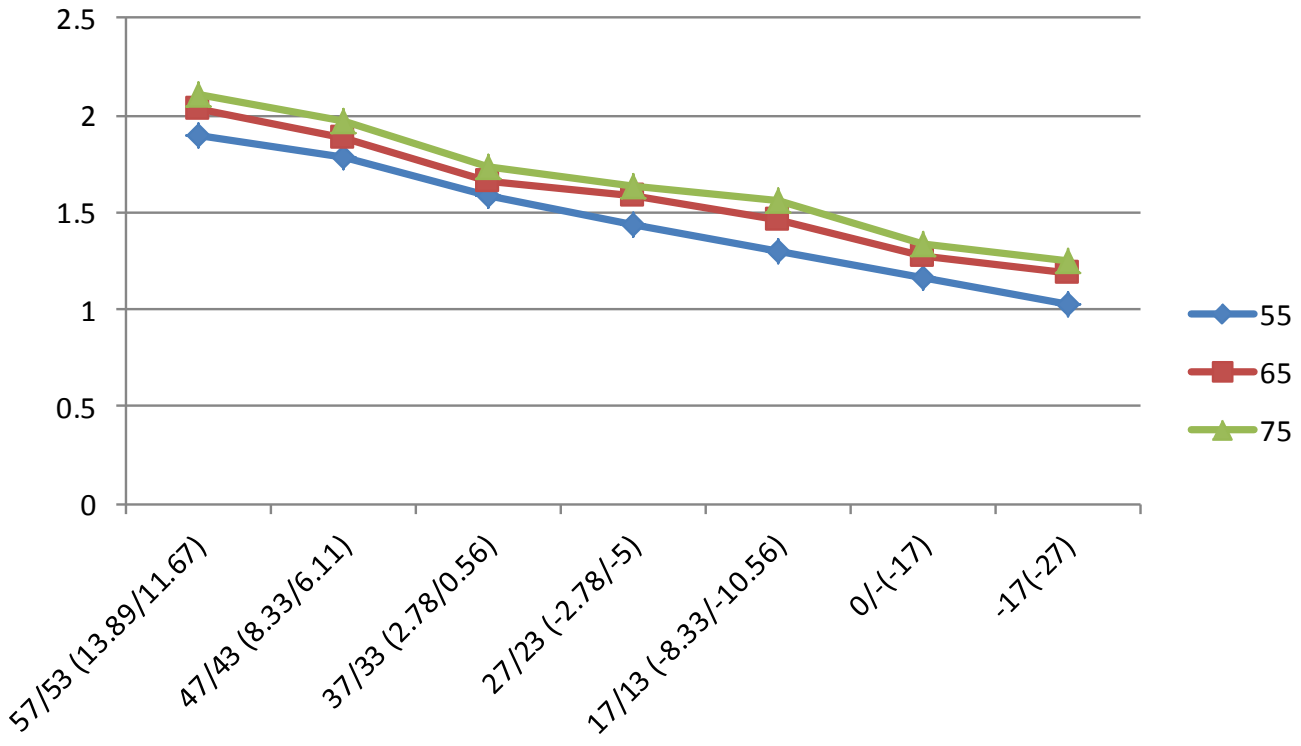

Cooling chart(R32):

°F(°C)	ODU(DB) / IDU(DB/WB)	0(-17)	5(-15)	15 (-9.44)	45 (7.22)	75 (23.89)	85 (29.44)	95 (35)	105 (40.56)	115 (46.11)	120 (48.89)
BAR	70/59 (21.11/15)	6.5	6.6	7.4	8.2	8.4	8.0	8.3	8.8	10.3	10.8
	75/63 (23.89/17.22)	6.8	6.9	8.1	8.8	8.8	8.5	8.9	9.3	10.9	11.4
	80/67 (26.67/19.44)	7.2	7.3	8.7	9.7	9.5	9.1	9.3	9.8	11.4	12.1
	90/73 (32.22/22.78)	7.9	8.0	9.8	10.7	10.5	9.7	10.2	10.8	12.6	13.3
PSI	70/59 (21.11/15)	95	96	108	118	121	115	119	128	150	157
	75/63 (23.89/17.22)	99	101	117	128	126	122	129	135	158	165
	80/67 (26.67/19.44)	105	106	125	141	138	132	135	143	165	176
	90/73 (32.22/22.78)	114	115	142	155	152	141	148	157	184	193
MPa	70/59 (21.11/15)	0.65	0.66	0.74	0.82	0.84	0.80	0.83	0.88	1.03	1.08
	75/63 (23.89/17.22)	0.68	0.69	0.81	0.88	0.88	0.85	0.89	0.93	1.09	1.14
	80/67 (26.67/19.44)	0.72	0.73	0.87	0.97	0.95	0.91	0.93	0.98	1.14	1.21
	90/73 (32.22/22.78)	0.79	0.80	0.98	1.07	1.05	0.97	1.02	1.08	1.26	1.33

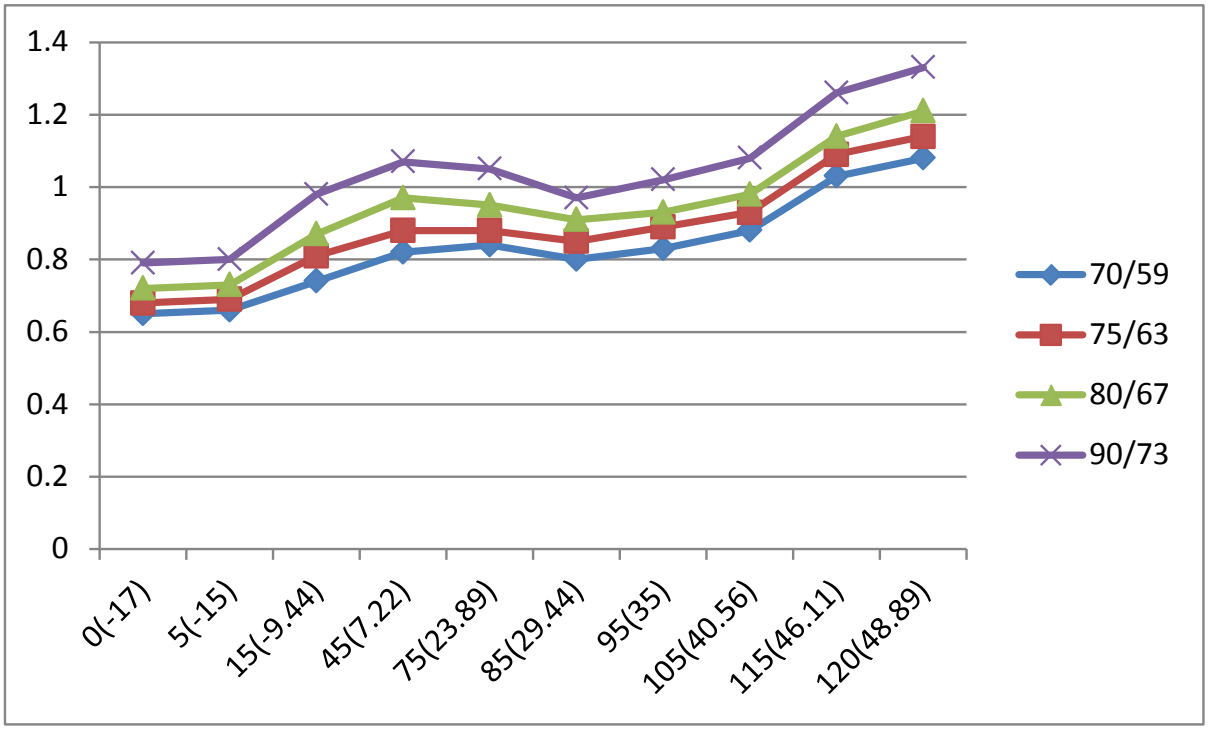

Heating chart(R32):

°F(°C)	QDU(DB/WB) / IDU(DB)	57/53 (13.89/11.67)	47/43 (8.33/6.11)	37/33 (2.78/0.56)	27/23 (-2.78/-5)	17/13 (-8.33/-10.56)	0/-2 (-17/-19)	-17/-18 (-27/-28)
BAR	55(12.78)	30.9	29.1	25.8	23.3	21.2	18.9	16.8
	65(18.33)	33.2	30.6	27.1	25.9	23.8	20.9	19.4
	75(23.89)	34.5	32.1	28.4	26.8	25.4	21.9	20.4
PSI	55(12.78)	448	421	374	337	308	273	244
	65(18.33)	480	444	394	375	346	303	282
	75(23.89)	499	466	411	389	369	318	296
MPa	55(12.78)	3.09	2.91	2.58	2.33	2.12	1.89	1.68
	65(18.33)	3.32	3.06	2.71	2.59	2.38	2.09	1.94
	75(23.89)	3.45	3.21	2.84	2.68	2.54	2.19	2.04

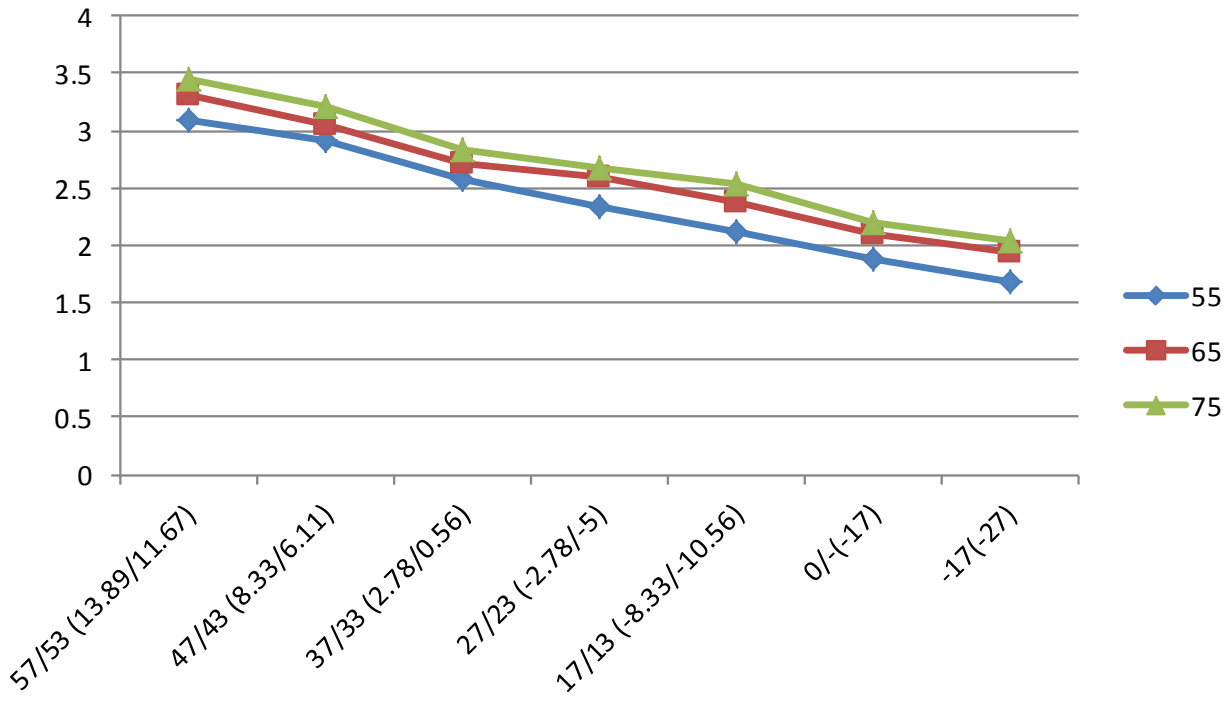

System Pressure Table-R22

Pressure			Temperature		Pressure			Temperature	
Kpa	bar	PSI	°C	°F	Kpa	bar	PSI	°C	°F
100	1	14.5	-41.091	-41.964	1600	16	232	41.748	107.146
150	1.5	21.75	-32.077	-25.739	1650	16.5	239.25	43.029	109.452
200	2	29	-25.177	-13.319	1700	17	246.5	44.281	111.706
250	2.5	36.25	-19.508	-3.114	1750	17.5	253.75	45.506	113.911
300	3	43.5	-14.654	5.623	1800	18	261	46.706	116.071
350	3.5	50.75	-10.384	13.309	1850	18.5	268.25	47.882	118.188
400	4	58	-6.556	20.199	1900	19	275.5	49.034	120.261
450	4.5	65.25	-3.075	26.464	1950	19.5	282.75	50.164	122.295
500	5	72.5	0.124	32.223	2000	20	290	51.273	124.291
550	5.5	79.75	3.091	37.563	2050	20.5	297.25	52.361	126.250
600	6	87	5.861	42.550	2100	21	304.5	53.43	128.174
650	6.5	94.25	8.464	47.234	2150	21.5	311.75	54.48	130.064
700	7	101.5	10.92	51.656	2200	22	319	55.512	131.922
750	7.5	108.75	13.249	55.848	2250	22.5	326.25	56.527	133.749
800	8	116	15.465	59.837	2300	23	333.5	57.526	135.547
850	8.5	123.25	17.58	63.644	2350	23.5	340.75	58.508	137.314
900	9	130.5	19.604	67.287	2400	24	348	59.475	139.055
950	9.5	137.75	21.547	70.785	2450	24.5	355.25	60.427	140.769
1000	10	145	23.415	74.147	2500	25	362.5	61.364	142.455
1050	10.5	152.25	25.216	77.389	2550	25.5	369.75	62.288	144.118
1100	11	159.5	26.953	80.515	2600	26	377	63.198	145.756
1150	11.5	166.75	28.634	83.541	2650	26.5	384.25	64.095	147.371
1200	12	174	30.261	86.470	2700	27	391.5	64.98	148.964
1250	12.5	181.25	31.839	89.310	2750	27.5	398.75	65.852	150.534
1300	13	188.5	33.371	92.068	2800	28	406	66.712	152.082
1350	13.5	195.75	34.86	94.748	2850	28.5	413.25	67.561	153.610
1400	14	203	36.308	97.354	2900	29	420.5	68.399	155.118
1450	14.5	210.25	37.719	99.894	2950	29.5	427.75	69.226	156.607
1500	15	217.5	39.095	102.371	3000	30	435	70.042	158.076
1550	15.5	224.75	40.437	104.787					

System Pressure Table-R410A

Pressure			Temperature		Pressure			Temperature	
Kpa	bar	PSI	°C	°F	Kpa	bar	PSI	°C	°F
100	1	14.5	-51.623	-60.921	2350	23.5	340.75	38.817	101.871
150	1.5	21.75	-43.327	-45.989	2400	24	348	39.68	103.424
200	2	29	-36.992	-34.586	2450	24.5	355.25	40.531	104.956
250	2.5	36.25	-31.795	-25.231	2500	25	362.5	41.368	106.462
300	3	43.5	-27.351	-17.232	2550	25.5	369.75	42.192	107.946
350	3.5	50.75	-23.448	-10.206	2600	26	377	43.004	109.407
400	4	58	-19.953	-3.915	2650	26.5	384.25	43.804	110.847
450	4.5	65.25	-16.779	1.798	2700	27	391.5	44.592	112.266
500	5	72.5	-13.863	7.047	2750	27.5	398.75	45.37	113.666
550	5.5	79.75	-11.162	11.908	2800	28	406	46.136	115.045
600	6	87	-8.643	16.444	2850	28.5	413.25	46.892	116.406
650	6.5	94.25	-6.277	20.701	2900	29	420.5	47.638	117.748
700	7	101.5	-4.046	24.716	2950	29.5	427.75	48.374	119.073
750	7.5	108.75	-1.933	28.521	3000	30	435	49.101	120.382
800	8	116	0.076	32.137	3050	30.5	442.25	49.818	121.672
850	8.5	123.25	1.993	35.587	3100	31	449.5	50.525	122.945
900	9	130.5	3.826	38.888	3150	31.5	456.75	51.224	124.203
950	9.5	137.75	5.584	42.052	3200	32	464	51.914	125.445
1000	10	145	7.274	45.093	3250	32.5	471.25	52.596	126.673
1050	10.5	152.25	8.901	48.022	3300	33	478.5	53.27	127.886
1100	11	159.5	10.471	50.848	3350	33.5	485.75	53.935	129.083
1150	11.5	166.75	11.988	53.578	3400	34	493	54.593	130.267
1200	12	174	13.457	56.223	3450	34.5	500.25	55.243	131.437
1250	12.5	181.25	14.879	58.782	3500	35	507.5	55.885	132.593
1300	13	188.5	16.26	61.268	3550	35.5	514.75	56.52	133.736
1350	13.5	195.75	17.602	63.684	3600	36	522	57.148	134.866
1400	14	203	18.906	66.031	3650	36.5	529.25	57.769	135.984
1450	14.5	210.25	20.176	68.317	3700	37	536.5	58.383	137.089
1500	15	217.5	21.414	70.545	3750	37.5	543.75	58.99	138.182
1550	15.5	224.75	22.621	72.718	3800	38	551	59.591	139.264
1600	16	232	23.799	74.838	3850	38.5	558.25	60.185	140.333
1650	16.5	239.25	24.949	76.908	3900	39	565.5	60.773	141.391
1700	17	246.5	26.074	78.933	3950	39.5	572.75	61.355	142.439
1750	17.5	253.75	27.174	80.913	4000	40	580	61.93	143.474
1800	18	261	28.251	82.852	4050	40.5	587.25	62.499	144.498
1850	18.5	268.25	29.305	84.749	4100	41	594.5	63.063	145.513
1900	19	275.5	30.338	86.608	4150	41.5	601.75	63.62	146.516
1950	19.5	282.75	31.351	88.432	4200	42	609	64.172	147.510
2000	20	290	32.344	90.219	4250	42.5	616.25	64.719	148.494
2050	20.5	297.25	33.319	91.974	4300	43	623.5	65.259	149.466
2100	21	304.5	34.276	93.697	4350	43.5	630.75	65.795	150.431
2150	21.5	311.75	35.215	95.387	4400	44	638	66.324	151.383
2200	22	319	36.139	97.050	4450	44.5	645.25	66.849	152.328
2250	22.5	326.25	37.047	98.685	4500	45	652.5	67.368	153.262
2300	23	333.5	37.939	100.290					

System Pressure Table-R32

Pressure			Temperature		Pressure			Temperature	
Kpa	bar	PSI	°C	°F	Kpa	bar	PSI	°C	°F
100	1	14.5	-51.909	-61.436	1850	18.5	268.25	28.425	83.165
150	1.5	21.75	-43.635	-46.543	1900	19	275.5	29.447	85.005
200	2	29	-37.323	-35.181	1950	19.5	282.75	30.448	86.806
250	2.5	36.25	-32.15	-25.87	2000	20	290	31.431	88.576
300	3	43.5	-27.731	-17.916	2050	20.5	297.25	32.395	90.311
350	3.5	50.75	-23.85	-10.93	2100	21	304.5	33.341	92.014
400	4	58	-20.378	-4.680	2150	21.5	311.75	34.271	93.688
450	4.5	65.25	-17.225	0.995	2200	22	319	35.184	95.331
500	5	72.5	-14.331	6.204	2250	22.5	326.25	36.082	96.948
550	5.5	79.75	-11.65	11.03	2300	23	333.5	36.965	98.537
600	6	87	-9.150	15.529	2350	23.5	340.75	37.834	100.101
650	6.5	94.25	-6.805	19.752	2400	24	348	38.688	101.638
700	7	101.5	-4.593	23.734	2450	24.5	355.25	39.529	103.152
750	7.5	108.75	-2.498	27.505	2500	25	362.5	40.358	104.644
800	8	116	-0.506	31.089	2550	25.5	369.75	41.173	106.111
850	8.5	123.25	1.393	34.507	2600	26	377	41.977	107.559
900	9	130.5	3.209	37.777	2650	26.5	384.25	42.769	108.984
950	9.5	137.75	4.951	40.911	2700	27	391.5	43.55	110.39
1000	10	145	6.624	43.923	2750	27.5	398.75	44.32	111.776
1050	10.5	152.25	8.235	46.823	2800	28	406	45.079	113.142
1100	11	159.5	9.790	49.621	2850	28.5	413.25	45.828	114.490
1150	11.5	166.75	11.291	52.324	2900	29	420.5	46.567	115.821
1200	12	174	12.745	54.941	2950	29.5	427.75	47.296	117.133
1250	12.5	181.25	14.153	57.475	3000	30	435	48.015	118.427
1300	13	188.5	15.52	59.936	3050	30.5	442.25	48.726	119.707
1350	13.5	195.75	16.847	62.325	3100	31	449.5	49.428	120.970
1400	14	203	18.138	64.648	3150	31.5	456.75	50.121	122.218
1450	14.5	210.25	19.395	66.911	3200	32	464	50.806	123.451
1500	15	217.5	20.619	69.114	3250	32.5	471.25	51.482	124.668
1550	15.5	224.75	21.813	71.263	3300	33	478.5	52.15	125.87
1600	16	232	22.978	73.360	3350	33.5	485.75	52.811	127.060
1650	16.5	239.25	24.116	75.409	3400	34	493	53.464	128.235
1700	17	246.5	25.229	77.412	3450	34.5	500.25	54.11	129.398
1750	17.5	253.75	26.317	79.371	3500	35	507.5	54.748	130.546
1800	18	261	27.382	81.288					